www.lemo.com

FGG.1B.302.CLAD62

SUMMARY

Wires

Low voltage	**2**



Image is for illustrative purpose only

Series	1B
Termination type	Male solder
IP rating	50
AWG wire size	28.00 - 20.00
Cable Ø	5.30 - 6.20 mm
Status	active
Matching parts	EGG.1B.302.CLL
	PHG.1B.302.CLLD62

Download

Request a quote

Eplan

Catalog

See video assembly instructions

TECHNICAL DETAILS

Mechanics

Shell Style/Model	FG*: Straight plug, cable collet
Keying	1 key (alpha=0, plug: male contacts, receptacle: female contacts)
Housing Material	Brass (chrome plated [SAE AMS 2460]) shell and collet nut, nickel plated [SAE AMS QQ N 290] brass latch sleeve and mid pieces
Weight	15.04 g

Performance

Configuration	1B.302 : 2 Low Voltage
Insulator	L: PEEK (UL 94 / V-0/1.5)
Rated Current	15 Amps

Specifications

Contact Type: Solder
Contact Dia.: 1.3 mm (0.051in)
Bucket Dia.: 1 mm (0.039in)
Max. Solid Conductor: 0.5 mm^2 (AWG 20)
Max. Stranded Conductor: 0.5 mm^2 (AWG 20)
R (max): 3.6 mOhm
Vtest (contact-shell): 1350 V (AC), 1910 V (DC)
Vtest (contact-contact): 1500 V (AC), 2120 V (DC)

LEMO products and services are provided “as is”. LEMO makes no warranties or representations with regard to LEMO product & services or use of them, express, implied or statutory, including for accuracy, completeness, or security. The user is fully responsible for his products and applications using LEMO components.

Others

Endurance (Shell): 5000
Temp (min / max): -55°C / +250°C
Humidity (max): <=95% [at 60 deg C /140 F]
Vibration: 15 g [10 Hz - 2000 Hz]
Shock Resistance: 100 g [6 ms]
Climatical Category: 50/175/21
Shielding (min): 75 dB (10 MHz)
Shielding (min): 40 dB (1 GHz)
Salt Spray Corrosion: >1000 hr

DRAWINGS

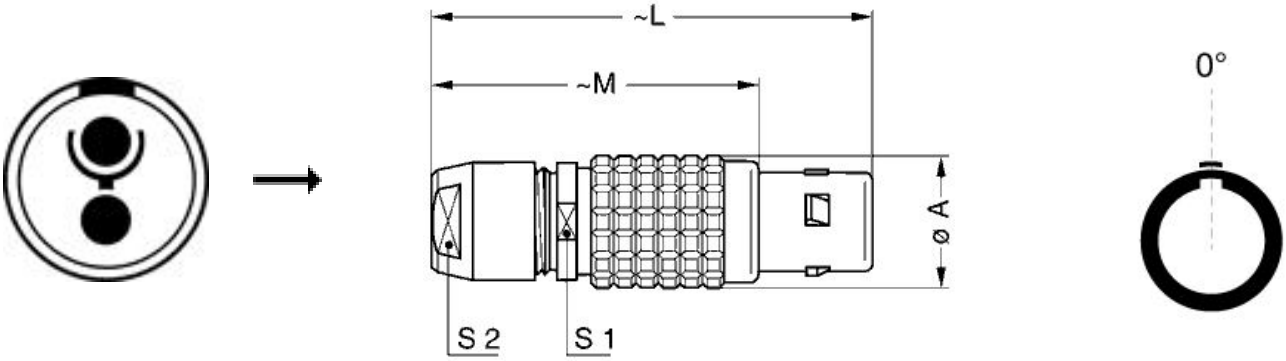

Dimensions

	A	L	M	S1	S2
mm.	12	43	32	10	9
in.	0,47	1,69	1,26	0,39	0,35

RECOMMENDED BY LEMO

Tools

Spanner wrench: DCD.1B.015.PA090

Caps: BFG.1B.100.PCSG

LEMO products and services are provided "as is". LEMO makes no warranties or representations with regard to LEMO product & services or use of them, express, implied or statutory, including for accuracy, completeness, or security. The user is fully responsible for his products and applications using LEMO components.

Cables

102080	PVC	Grey	
120184	PVC	Black	
120500	PVC	Grey	
120751	PVC	Grey	
220750	PVC	Grey	

LEMO products and services are provided “as is”. LEMO makes no warranties or representations with regard to LEMO product & services or use of them, express, implied or statutory, including for accuracy, completeness, or security. The user is fully responsible for his products and applications using LEMO components.