www.lemo.com

FLA.0S.650.CTLC42Z

SUMMARY

Wires

Triax	1



Image is for illustrative purpose only

Series	0S
Termination type	Female solder
IP rating	50
AWG wire size	0.00 - 0.00
Cable Ø	3.80 - 4.40 mm
Status	active
Alternative part	FLA.0S.650.CTLC44Z
Matching parts	ERA.0S.650.CTA

Download

Request a quote

Catalog

TECHNICAL DETAILS

Mechanics

Shell Style/Model	FLA*: Elbow plug, cable collet and nut for fitting a bend relief
Keying	Circular, female
Housing Material	Brass (chrome plated [SAE AMS 2460]) shell and collet nut, nickel plated [SAE AMS QQ N 290] brass latch sleeve and mid pieces
Variant	Z : Nut for fitting a bend relief
Weight	15.31 g

Performance

Configuration	0S.650 : 1 Triax (50 Ohm)
Insulator	T: PTFE
Rated Current	6 Amps

Specifications

Contact Type: Triaxial 50 Ohm (Solder)
Contact Dia.: 0.9 mm (0.035"in)
Vtest: 1200 V (AC), 1700 V (DC)
Impedance: 50 Ohm
VSWR: 1.03 + 0.34 * f/GHz
Cable type: RGT 178, RGT 174

LEMO products and services are provided “as is”. LEMO makes no warranties or representations with regard to LEMO product & services or use of them, express, implied or statutory, including for accuracy, completeness, or security. The user is fully responsible for his products and applications using LEMO components.

Others

Endurance (Shell): 5000 mating cycles
Temp (min / max): -55°C / +250°C
Humidity (max): <=95% [at 60 deg C /140 F]
Vibration: 15 g [10 Hz - 2000 Hz]
Shock Resistance: 100 g [6 ms]
Climatical Category: 50/175/21
Shielding (min): 75 dB (10 MHz)
Shielding (min): 40 dB (1 GHz)
Salt Spray Corrosion: >144 hr

DRAWINGS

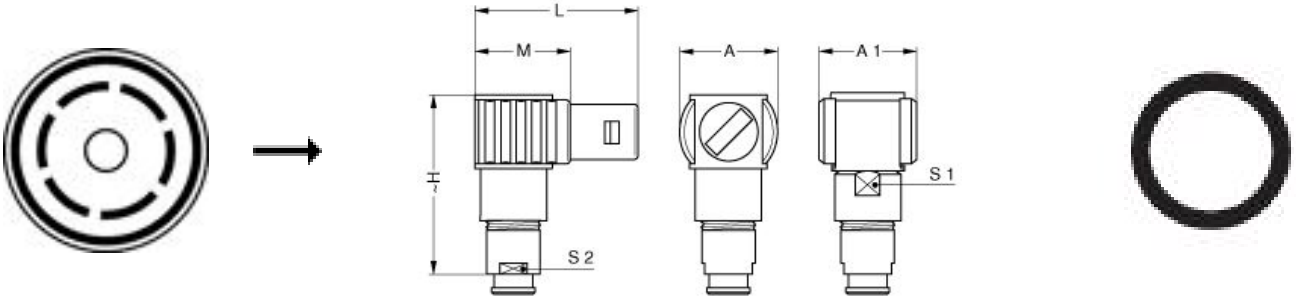

Dimensions

	A	H	L	M	S1	S2
mm.	13	24.5	23	13	8	6.5
in.	0,51	0,96	0,91	0,51	0,31	0,26

RECOMMENDED BY LEMO

Tools

LEMO products and services are provided “as is”. LEMO makes no warranties or representations with regard to LEMO product & services or use of them, express, implied or statutory, including for accuracy, completeness, or security. The user is fully responsible for his products and applications using LEMO components.

LEMO products and services are provided “as is”. LEMO makes no warranties or representations with regard to LEMO product & services or use of them, express, implied or statutory, including for accuracy, completeness, or security. The user is fully responsible for his products and applications using LEMO components.