PCA.00.250.CTAC29

SUMMARY

Wires

Coax	1



Image is for illustrative purpose only

Series	00
Termination type	Male solder
IP rating	50
AWG wire size	0.00 - 0.00
Cable Ø	2.80 - 3.10 mm
Status	obsolete
Alternative part	PCA.00.250.CTAC31

Download

Request a quote

Catalog

TECHNICAL DETAILS

Mechanics

Shell Style/Model	PCA*: Free receptacle with cable collet
Keying	Circular, male
Housing Material	Brass (chrome plated [SAE AMS 2460]) shell and collet nut, nickel plated [SAE AMS QQ N 290] brass latch sleeve and mid pieces
Weight	3.51 g

Performance

Configuration	00.250 : 1 Coax (50 Ohm)
Insulator	T: PTFE
Rated Current	4 Amps

Specifications

Contact Type: Coaxial 50 Ohm (Solder)
Contact Dia.: 0.7 mm (0.028in)
Bucket Dia.: 0.6 mm (0.024in)
Test voltage: 2.1 kV (rms)
R (max): 6.1 mOhm
Vtest: 2100 V (AC), 3000 V (DC)
Impedance: 50 Ohm

LEMO products and services are provided “as is”. LEMO makes no warranties or representations with regard to LEMO product & services or use of them, express, implied or statutory, including for accuracy, completeness, or security. The user is fully responsible for his products and applications using LEMO components.

VSWR: 1.09 + 0.11 * f/GHz
Cable type: RG 316 /U

Others

Endurance (Shell): 5000 mating cycles
F ret (min): 100 N
Salt Spray Corrosion: >1000 hr

DRAWINGS

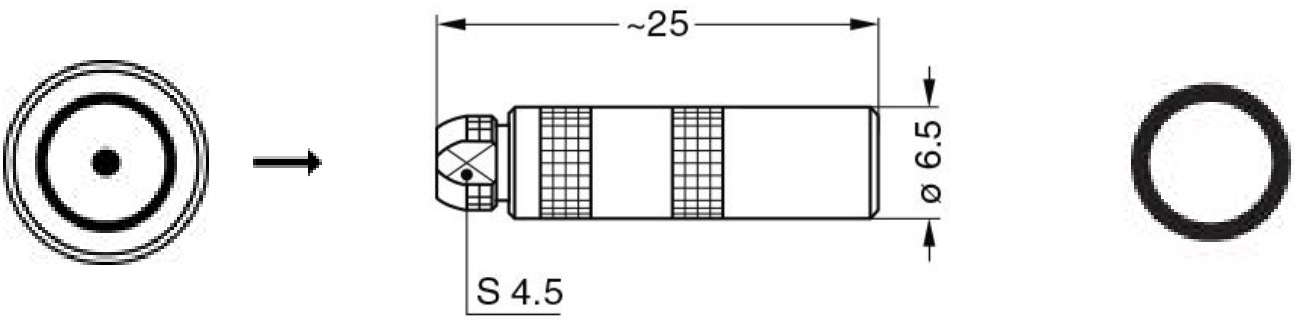

Dimensions

	A	L	S2
mm.	6.5	25	4.5
in.	0,26	0,98	0,18

RECOMMENDED BY LEMO

Tools

Spanner wrench: DCD.00.003.PA045

Cables

LEMO products and services are provided “as is”. LEMO makes no warranties or representations with regard to LEMO product & services or use of them, express, implied or statutory, including for accuracy, completeness, or security. The user is fully responsible for his products and applications using LEMO components.

17420	PVC	Black	
31600	PTFE	Brown	
CCX.50.RG1.74AU28N	PVC	Black	
CCX.50.RG1.74AU28N	PVC	Black	
CCX.50.RG3.16U28M	PTFE	Brown	

LEMO products and services are provided “as is”. LEMO makes no warranties or representations with regard to LEMO product & services or use of them, express, implied or statutory, including for accuracy, completeness, or security. The user is fully responsible for his products and applications using LEMO components.