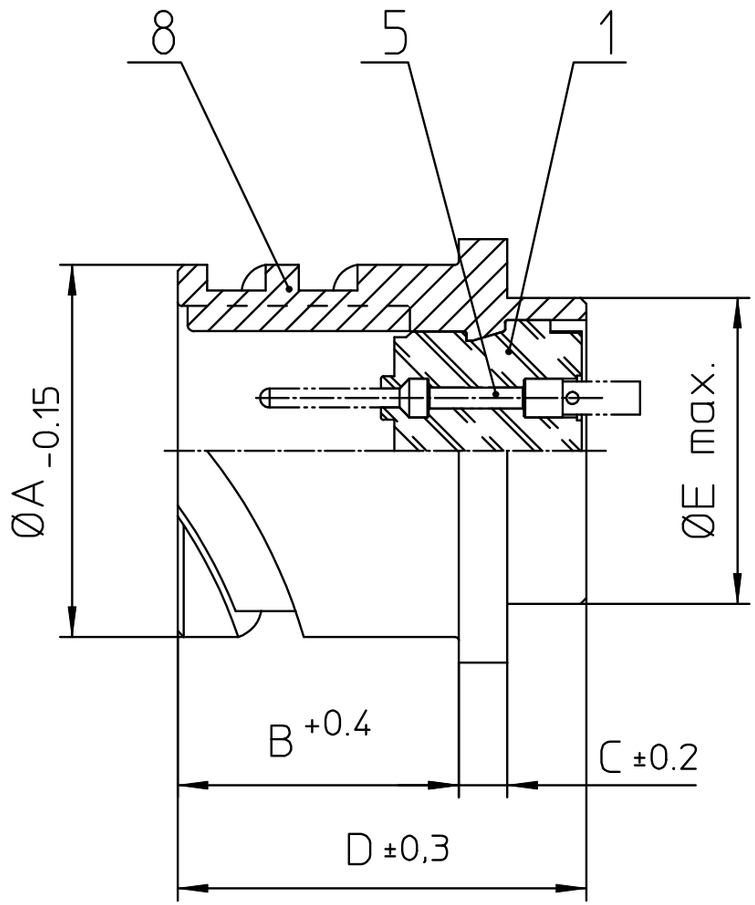

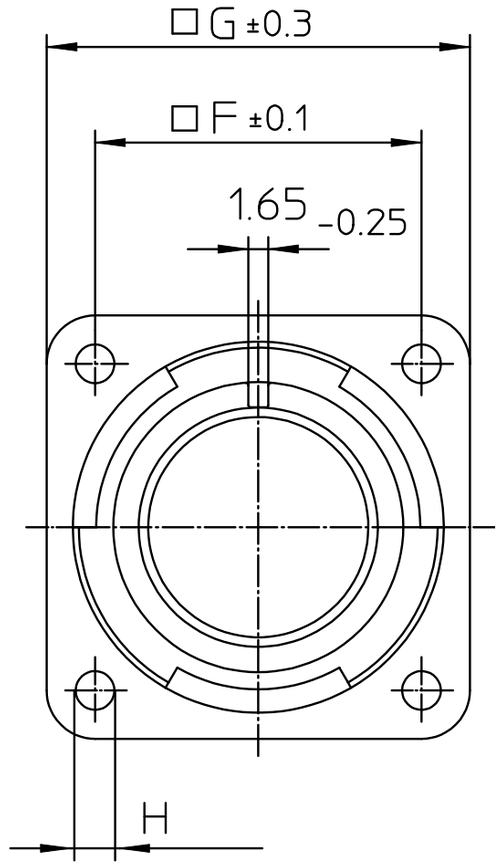

NO.	MASSE / DIMENSIO
A	59.6
B	22.2
C	4
D	33.8
E	52.6
F	49.2
G	63.5
H	4.3

NO.	BESCHREIBUNG / DESCRIPTION
1	ISOLIERKÖRPER STIFT / INSULATOR PIN
5	KONTAKTSTIFT/ CONTACT PIN
8	DOSENGEHÄUSE / SHELL

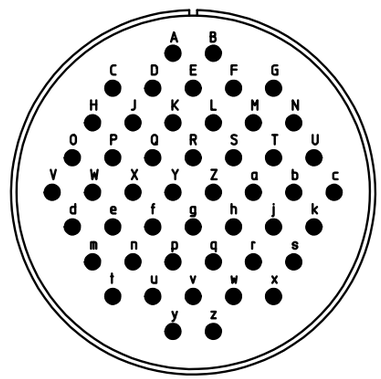

Note: Due to an automatic nomenclature system, numbers generated may not be sequential.

Specification and Dimensions subject to change
Drawings illustrate normal insulator positioning

Material Specification:	
Shell Material:	Aluminium alloy
Shell Plating:	Olive drab chromate over cadmium (conductive)
Insulator Material:	CR-Elastomere
Contact Material:	Copper alloy
Contact Plating:	Gold 0,5 mµ

all dimensions are in mm
Dimensions without tolerance indications are general tolerances in acc. with DIN7168m

drawing for
CUSTOMER

ITT
Engineered for life
ITT CANNON GmbH
D - 71384 Weinstadt/Germany

description
CA3102E36-10PWB-F80-A176
Box mounting receptacle

AWG Crimp / Pin / Layout: 36-10

© All rights reserved, Reproduction or issue to third in any form whatever is only permitted with written authorization of ITT Cannon

page 1/1

revision
2500 6. Dec 21