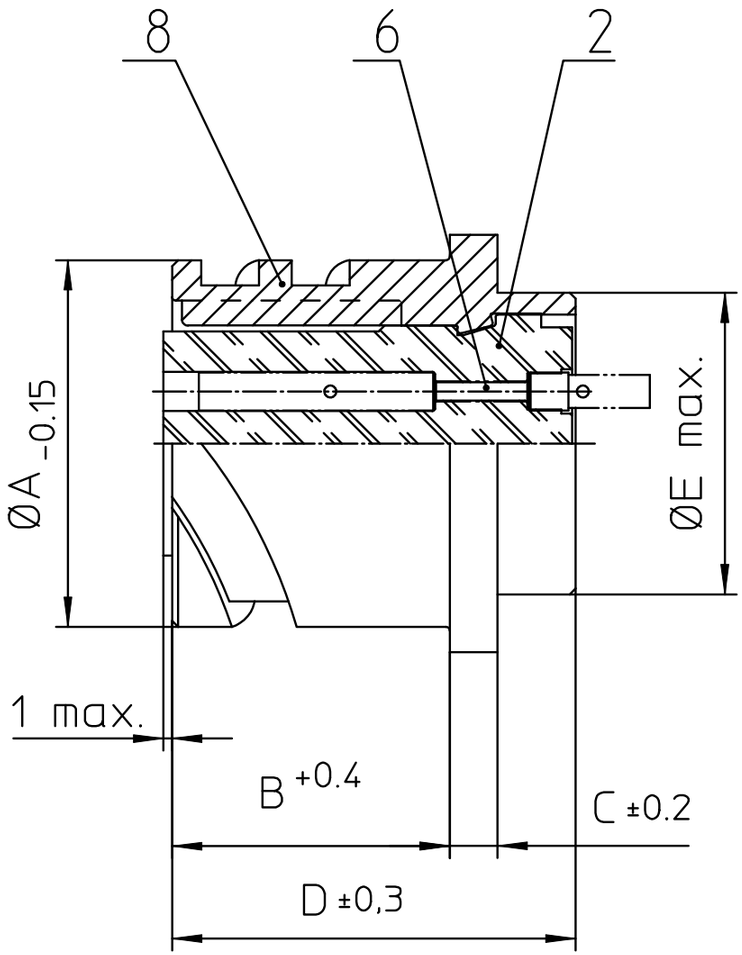


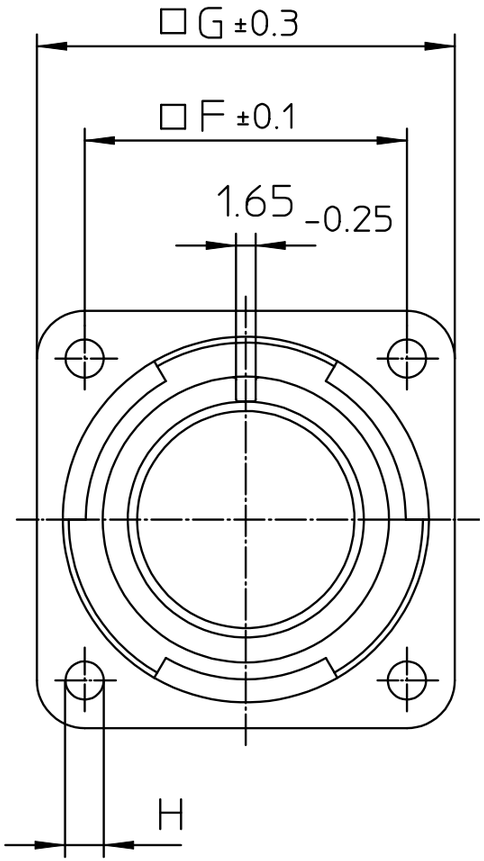


| NO. | MASSE / DIMENSIO |
|---|---|
| A | 46.7 |
| B | 20.6 |
| C | 4 |
| D | 33.8 |
| E | 41.4 |
| F | 39.7 |
| G | 50.8 |
| H | 3.7 |

| NO. | BESCHREIBUNG / DESCRIPTION |
|---|---|
| 2 | ISOLIERKÖRPER BUCHSE / INSULATOR SOCKET |
| 6 | KONTAKTBUCHSE / CONTACT SOCKET |
| 8 | DOSENGEHÄUSE / SHELL |

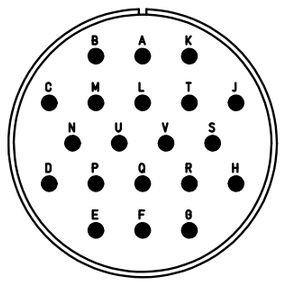


Note: Due to an automatic nomenclature system, numbers generated may not be sequential.

Specification and Dimensions subject to change
Drawings illustrate normal insulator positioning

| Material Specification: | |
|---|---|
| Shell Material: | Aluminium alloy |
| Shell Plating: | Olive drab chromate over cadmium (conductive) |
| Insulator Material: | CR-Elastomere |
| Contact Material: | Copper alloy |
| Contact Plating: | Gold 0,5 mµ |

all dimensions are in mm
Dimensions without tolerance indications are general tolerances in acc. with DIN7168m

drawing for
CUSTOMER

ITT
Engineered for life
ITT CANNON GmbH
D - 71384 Weinstadt/Germany

description
CA3102E28-16S-B-F80-A176
Box mounting receptacle

AWG Crimp / Socket / Layout: 28-16

© All rights reserved. Reproduction or issue to third in any form whatever is only permitted with written authorization of ITT Cannon

page 1/1

revision
2500 6. Dec 21