TCAN1046-Q1 Automotive Fault-Protected Dual CAN FD Transceiver with Standby Mode

1 Features

- AEC-Q100: Qualified for automotive applications
  - Temperature grade 1: –40°C to 125°C T_A
- Two independent high-speed CAN FD transceivers with mode control
- Meets the requirements of ISO 11898-2:2016 and ISO 11898-5:2007 physical layer standards
- Support of classical CAN and optimized CAN FD performance at 2, 5, and 8 Mbps
  - Short and symmetrical propagation delays for enhanced timing margin
  - Higher data rates in loaded CAN networks
- I/O voltage range supports 1.7 V to 5.5 V
  - Support for 1.8-V, 2.5-V, 3.3-V, and 5-V applications
- Protection features:
  - Bus fault protection: ±58 V
  - Undervoltage protection
  - TXD-dominant time-out (DTO)
    - Data rates down to 9.2 kbps
  - Thermal-shutdown protection (TSD)
- Operating modes:
  - Normal mode
  - Low power standby mode supporting remote wake-up request
- Optimized behavior when unpowered
  - Bus and logic pins are high impedance (no load to operating bus or application)
  - Hot-plug capable: power up/down glitch free operation on bus and RXD output
- Junction temperatures from: –40°C to 150°C
- Receiver common mode input voltage: ±12 V
- Available in SOIC (14) and leadless VSON (14) packages (4.5 mm x 3.0 mm) with improved automated optical inspection (AOI) capability

2 Applications

- Automotive and Transportation
  - Body control modules
  - Automotive gateway
  - Advanced driver assistance system (ADAS)
  - Infotainment

3 Description

The TCAN1046-Q1 (TCAN1046) is a dual high-speed controller area network (CAN) transceiver that meets the physical layer requirements of the ISO 11898-2:2016 high-speed CAN specification.

The TCAN1046 supports both classical CAN and CAN FD networks up to 8 megabits per second (Mbps). The TCAN1046 has two CAN FD channels with independent supply, V_{CC1} and V_{CC2}, and mode control, STB1 and STB2, pins allowing for true independent operation of each CAN channel. The ability to operate each channel independent of one another is important in applications that require redundancy or additional CAN FD channels to act as a back-up in the event of a system failure.

The TCAN1046 includes many protection and diagnostic features including thermal-shutdown (TSD), TXD-dominant time-out (DTO), and bus fault protection up to ±58 V.

Device Information

PART NUMBER	PACKAGE(1)	BODY SIZE (NOM)
TCAN1046-Q1	VSON (DMT) (14)	4.50 mm x 3.00 mm
	SOIC (D) (14)	8.95 mm x 3.91 mm

(1) For all available packages, see the orderable addendum at the end of the data sheet.

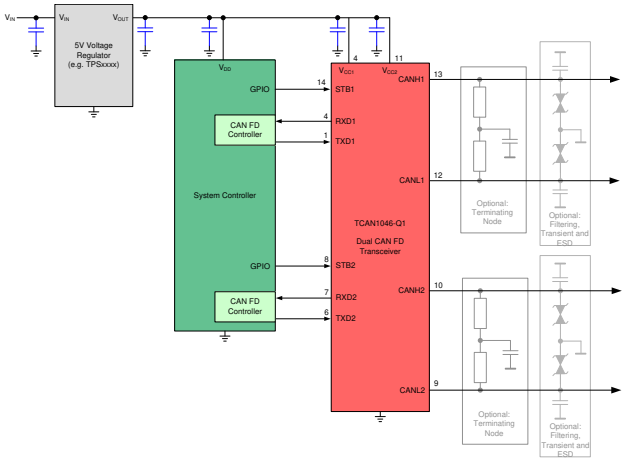

Simplified Schematic

An IMPORTANT NOTICE at the end of this data sheet addresses availability, warranty, changes, use in safety-critical applications, intellectual property matters and other important disclaimers. PRODUCTION DATA.

Table of Contents

1 Features.....1
2 Applications.....1
3 Description.....1
4 Revision History.....2
5 Pin Configuration and Functions.....3
Pin Functions.....3
6 Specifications.....4
6.1 Absolute Maximum Ratings.....4
6.2 ESD Ratings.....4
6.3 Recommended Operating Conditions.....4
6.4 Thermal Characteristics.....4
6.5 Supply Characteristics.....5
6.6 Dissipation Ratings.....5
6.7 Electrical Characteristics.....5
6.8 Switching Characteristics.....7
6.9 Typical Characteristics.....9
7 Parameter Measurement Information.....10
8 Detailed Description.....13
8.1 Overview.....13
8.2 Functional Block Diagram.....14
8.3 Feature Description.....15
8.4 Device Functional Modes.....18
9 Application and Implementation.....21
9.1 Application Information.....21
9.2 Typical Application.....21
10 Power Supply Recommendations.....23
11 Device and Documentation Support.....25
11.1 Documentation Support.....25
11.2 Receiving Notification of Documentation Updates.....25
11.3 Support Resources.....25
11.4 Trademarks.....25
11.5 Electrostatic Discharge Caution.....25
11.6 Glossary.....25

4 Revision History

NOTE: Page numbers for previous revisions may differ from page numbers in the current version.

Changes from Revision * (March 2020) to Revision A (September 2020)	Page
• First public release of the data sheet	1

Copyright © 2020 Texas Instruments Incorporated

5 Pin Configuration and Functions

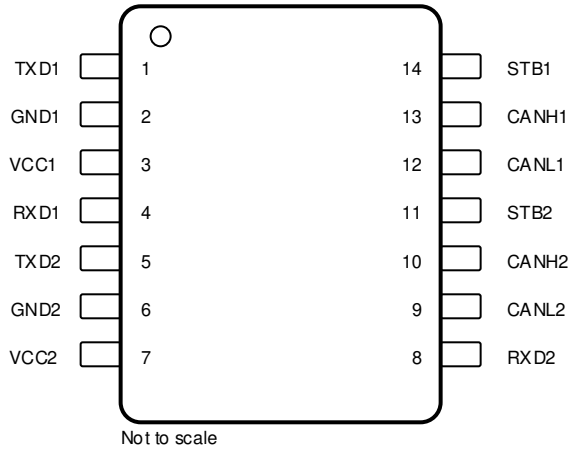

D Package TCAN1046-Q1, 14 Pin SOIC, Top View

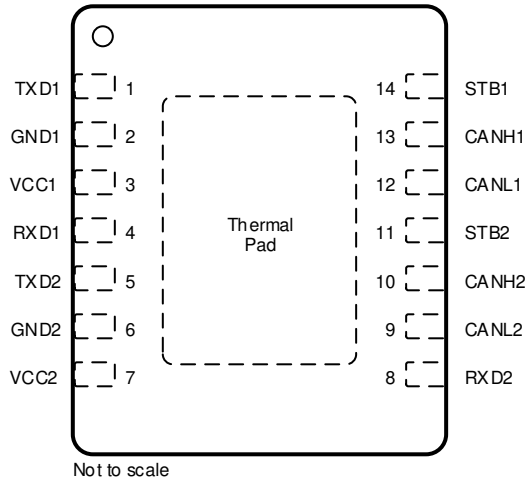

DMT Package TCAN1046-Q1, 14 Pin VSON, Top View

Pin Functions

Pins		Type	Description
Name	No.		
TXD1	1	Digital Input	CAN transmit data input 1, integrated pull-up
GND1	2	GND1	Ground connection, transceiver 1
V_{CC1}	3	Supply	5-V supply voltage, transceiver 1
RXD1	4	Digital Output	CAN receive data output 1, tri-state when $V_{CC} < UV_{VCC}$
TXD2	5	Digital Input	CAN transmit data input 2, integrated pull-up
GND2	6	GND2	Ground connection, transceiver 2
V_{CC2}	7	Supply	5-V supply voltage, transceiver 2
RXD2	8	Digital Output	CAN receive data output 2, tri-state when $V_{CC} < UV_{VCC}$
CANL2	9	Bus IO	Low-level CAN bus 2 input/output line
CANH2	10	Bus IO	High-level CAN bus 2 input/output line
STB2	11	Digital Input	Standby input 2 for mode control, integrated pull-up
CANL1	12	Bus IO	Low-level CAN bus 1 input/output line
CANH1	13	Bus IO	High-level CAN bus 1 input/output line
STB1	14	Digital Input	Standby input 1 for mode control, integrated pull-up
Thermal Pad (VSON only)		—	Electrically connected to GND, connect the thermal pad to the printed circuit board (PCB) ground plane for thermal relief

Copyright © 2020 Texas Instruments Incorporated

6 Specifications

6.1 Absolute Maximum Ratings

over operating free-air temperature range (unless otherwise noted)[(1) (2)]

		MIN	MAX	UNIT
V_{CC1}, V_{CC2}	Supply voltage	-0.3	6	V
V_{BUS}	CAN Bus IO voltage CANH1, CANL1 & CANH2, CANL2	–58	58	V
V_{DIFF}	Max differential voltage between CANH1, CANL1 & CANH2, CANL2	–45	45	V
V_{Logic_Input}	Logic input terminal voltage	–0.3	6	V
V_{RXD}	RXD output terminal voltage range (V_{RXD1}, V_{RXD2})	–0.3	6	V
$I_{O(RXD)}$	RXD output current (I_{ORXD1}, I_{ORXD2})	–8	8	mA
T_J	Operating virtual junction temperature range	–40	150	°C
T_{STG}	Storage temperature	–65	150	°C

(1) Stresses beyond those listed under *Absolute Maximum Ratings* may cause permanent damage to the device. These are stress ratings only, which do not imply functional operation of the device at these or any other conditions beyond those indicated under *Recommended Operating Conditions*. Exposure to absolute-maximum-rated conditions for extended periods may affect device reliability.

(2) All voltage values, except differential IO bus voltages, are with respect to ground terminal.

6.2 ESD Ratings

				VALUE	UNIT
V_{ESD}	Electrostatic discharge	Human-body model (HBM), per AEC Q100-002[(1)]	HBM classification level 3A for all pins	±3000	V
			HBM classification level 3B for global pins CANH & CANL	±10000	V
		Charged-device model (CDM), per AEC Q100-011 CDM classification level C5 for all pins		±750	V

(1) AEC Q100-002 indicates that HBM stressing shall be in accordance with the ANSI/ESDA/JEDEC JS-001 specification.

6.3 Recommended Operating Conditions

		MIN	NOM	MAX	UNIT
V_{CC1}, V_{CC2}	Supply voltage	4.5	5	5.5	V
$I_{OH(RXD)}$	RXD terminal high level output current – $I_{OH(RXD1)}$ & $I_{OH(RXD2)}$	–2			mA
$I_{OL(RXD)}$	RXD terminal low level output current – $I_{OL(RXD1)}$ & $I_{OL(RXD2)}$			2	mA
T_A	Operating ambient temperature	–40		125	℃

6.4 Thermal Characteristics

THERMAL METRIC[(1)]		TCAN1046-Q1		UNIT
		D (SOIC)	DMT (VSON)	
$R_{\theta JA}$	Junction-to-ambient thermal resistance	70.6	35.5	℃/W
$R_{\theta JC(top)}$	Junction-to-case (top) thermal resistance	33.4	38.1	℃/W
$R_{\theta JB}$	Junction-to-board thermal resistance	34.0	13.4	℃/W
Ψ_{JT}	Junction-to-top characterization parameter	5.0	1.9	℃/W
Ψ_{JB}	Junction-to-board characterization parameter	32.6	13.4	℃/W
$R_{\theta JC(bot)}$	Junction-to-case (bottom) thermal resistance	–	3.5	℃/W

(1) For more information about traditional and new thermal metrics, see the Semiconductor and IC Package Thermal Metrics application report.

Copyright © 2020 Texas Instruments Incorporated

6.5 Supply Characteristics

Over recommended operating conditions with T_A = -40°C to 125°C (unless otherwise noted)

PARAMETER		TEST CONDITIONS		MIN	TYP	MAX	UNIT
I_{CC}	Supply current Normal mode Per transceiver	Dominant	TXD = 0 V, STB = 0 V, R_L = 60 Ω, C_L = open See Figure 7-1		45	70	mA
			TXD = 0 V, STB = 0 V, R_L = 50 Ω, C_L = open See Figure 7-1		49	80	mA
		Recessive	TXD = V_{CC}, STB = 0 V, R_L = 50 Ω, C_L = open See Figure 7-1		4.5	7.5	mA
		Dominant with bus fault	TXD = 0 V, STB = 0 V, CANH = CANL = ±25 V, R_L = open, C_L = open See Figure 7-1			130	mA
I_{CC}	Supply current Standby mode Per transceiver		TXD = STB = V_{CC}, R_L = 50 Ω, C_L = open See Figure 7-1			14.5	µA
UV_{VCC}	Rising under voltage detection on V_{CC} for protected mode				4.2	4.4	V
UV_{VCC}	Falling under voltage detection on V_{CC} for protected mode			3.5	4	4.25	V

6.6 Dissipation Ratings

PARAMETER		TEST CONDITIONS	MIN	TYP	MAX	UNIT
P_D	Average power dissipation Normal mode Per transceiver	V_{CC} = 5 V, T_J= 27°C, R_L = 60Ω, TXD input = 250 kHz 50% duty cycle squarewave, C_{L_RXD} = 15 pF		110		mW
		V_{CC} = 5 V, T_J= 27°C, R_L = 60Ω, TXD input = 250 kHz 50% duty cycle squarewave, C_{L_RXD} = 15 pF		110		mW
		V_{CC} = 5 V, T_J= 27°C, R_L = 60Ω, TXD input = 250 kHz 50% duty cycle squarewave, C_{L_RXD} = 15 pF		110		mW
		V_{CC} = 5.5 V, T_A= 125°C, R_L = 60Ω, TXD input = 2.5 MHz 50% duty cycle squarewave, C_{L_RXD} = 15 pF		120		mW
		V_{CC} = 5.5 V, T_A= 125°C, R_L = 60Ω, TXD input = 2.5 MHz 50% duty cycle squarewave, C_{L_RXD} = 15 pF		120		mW
		V_{CC} = 5.5 V, T_A= 125°C, R_L = 60Ω, TXD input = 2.5 MHz 50% duty cycle squarewave, C_{L_RXD} = 15 pF		120		mW
T_{TSD}	Thermal shutdown temperature(1)		170	192	205	°C
T_{TSD_HYS}	Thermal shutdown hysteresis			10		°C

(1) Specified by design

6.7 Electrical Characteristics

Over recomended operating conditions with T_A = -40°C to 125°C (unless otherwise noted); CAN electrical parameters apply to both channels

PARAMETER			TEST CONDITIONS	MIN	TYP	MAX	UNIT
Driver Electrical Characteristics							
$V_{O(DOM)}$	Dominant output voltage Normal mode	CANH	TXD = 0 V, STB = 0 V , 50 Ω ≤ R_L ≤ 65 Ω, C_L = open, R_{CM} = open See Figure 7-2 and Figure 8-3 ,	2.75		4.5	V
		CANL		0.5		2.25	V
$V_{O(REC)}$	Recessive output voltage Normal mode	CANH and CANL	TXD = V_{CC} , STB = 0 V , R_L = open (no load), R_{CM} = open See Figure 7-2 and Figure 8-3	2	0.5 V_{CC}	3	V

6.7 Electrical Characteristics (continued)

Over recomended operating conditions with T_A = -40℃ to 125℃ (unless otherwise noted); CAN electrical parameters apply to both channels

PARAMETER			TEST CONDITIONS	MIN	TYP	MAX	UNIT
V_{SYM}	Driver symmetry ($V_{O(CANH)}$ + $V_{O(CANL)}$)/V_{CC}		STB = 0 V , R_L = 60 Ω, C_{SPLIT} = 4.7 nF, C_L = open, R_{CM} = open, TXD = 250 kHz, 1 MHz, 2.5 MHz See Figure 7-2 and Figure 9-2	0.9		1.1	V/V
V_{SYM_DC}	DC output symmetry (V_{CC} - $V_{O(CANH)}$ - $V_{O(CANL)}$)		STB = 0 V , R_L = 60 Ω, C_L = open See Figure 7-2 and Figure 8-3	–400		400	mV
$V_{OD(DOM)}$	Differential output voltage Normal mode Dominant	CANH - CANL	TXD = 0 V, STB = 0 V , 50 Ω ≤ R_L ≤ 65 Ω, C_L = open See Figure 7-2 and Figure 8-3	1.5		3	V
			TXD = 0 V, STB = 0 V , 45 Ω ≤ R_L ≤ 70 Ω, C_L = open See Figure 7-2 and Figure 8-3	1.4		3.3	V
			TXD = 0 V, STB = 0 V , R_L = 2240 Ω, C_L = open See Figure 7-2 and Figure 8-3	1.5		5	V
$V_{OD(REC)}$	Differential output voltage Normal mode Recessive	CANH - CANL	TXD = V_{CC} , STB = 0 V , R_L = 60 Ω, C_L = open See Figure 7-2 and Figure 8-3	–120		12	mV
			TXD = V_{CC} , STB = 0 V , R_L = open, C_L = open See Figure 7-2 and Figure 8-3	–50		50	mV
$V_{O(STB)}$	Bus output voltage Standby mode	CANH	STB = V_{CC} , R_L = open (no load) See Figure 7-2 and Figure 8-3	-0.1		0.1	V
		CANL		-0.1		0.1	V
		CANH - CANL		-0.2		0.2	V
$I_{OS(SS_DOM)}$	Short-circuit steady-state output current, dominant Normal mode		STB = 0 V , $V_{(CANH)}$ = -15 V to 40 V, CANL = open, TXD = 0 V See Figure 7-7 and Figure 8-3	–115			mA
			STB = 0 V , $V_{(CAN_L)}$ = -15 V to 40 V, CANH = open, TXD = 0 V See Figure 7-7 and Figure 8-3			115	mA
$I_{OS(SS_REC)}$	Short-circuit steady-state output current, recessive Normal mode		STB = 0 V , –27 V ≤ V_{BUS} ≤ 32 V, where V_{BUS} = CANH = CANL, TXD = V_{CC} See Figure 7-7 and Figure 8-3	–5		5	mA
Receiver Electrical Characteristics							
V_{IT}	Input threshold voltage Normal mode		STB = 0 V , -12 V ≤ V_{CM} ≤ 12 V See Figure 7-3, Figure 7-3, and Table 8-5	500		900	mV
$V_{IT(STB)}$	Input threshold Standby mode		STB = V_{CC} See Table 8-5	400		1150	mV
V_{DOM}	Dominant state differential input voltage range Normal mode		STB = 0 V , -12 V ≤ V_{CM} ≤ 12 V See Figure 7-3, and Table 8-5	0.9		9	V
V_{REC}	Recessive state differential input voltage range Normal mode		STB = 0 V , -12 V ≤ V_{CM} ≤ 12 V See Figure 7-3, and Table 8-5	-4		0.5	V
$V_{DOM(STB)}$	Dominant state differential input voltage range Standby mode		STB = V_{CC} , -12 V ≤ V_{CM} ≤ 12 V See Table 8-5	1.15		9	V
$V_{REC(STB)}$	Recessive state differential input voltage range Standby mode		STB = V_{CC} , -12 V ≤ V_{CM} ≤ 12 V See Table 8-5	-4		0.4	V
V_{HYS}	Hysteresis voltage for input threshold Normal mode		STB = 0 V , -12 V ≤ V_{CM} ≤ 12 V See Figure 7-3, and Table 8-5		100		mV
V_{CM}	Common mode range Normal and standby modes		See Figure 7-3 and Table 8-5	–12		12	V
$I_{LKG(OFF)}$	Unpowered bus input leakage current		CANH = CANL = 5 V, V_{CC} = GND			5	µA
C_I	Input capacitance to ground (CANH or CANL)		TXD = V_{CC}			20	pF
C_{ID}	Differential input capacitance					10	pF
R_{ID}	Differential input resistance		TXD = V_{CC} , STB = 0 V , -12 V ≤ V_{CM} ≤ 12 V	40		90	kΩ
R_{IN}	Single ended input resistance (CANH or CANL)			20		45	kΩ
$R_{IN(M)}$	Input resistance matching [1 – ($R_{IN(CANH)}$ / $R_{IN(CANL)}$)] × 100 %		$V_{(CAN_H)}$ = $V_{(CAN_L)}$ = 5 V	–1		1	%

Copyright © 2020 Texas Instruments Incorporated

6.7 Electrical Characteristics (continued)

Over recomended operating conditions with T_A = -40℃ to 125℃ (unless otherwise noted); CAN electrical parameters apply to both channels

PARAMETER		TEST CONDITIONS	MIN	TYP	MAX	UNIT
TXD Terminal (CAN Transmit Data Input)						
V_{IH}	High-level input voltage		0.7 V_{CC}			V
V_{IL}	Low-level input voltage				0.3 V_{CC}	V
I_{IH}	High-level input leakage current	TXD = V_{CC} = 5.5 V	–2.5	0	1	µA
I_{IL}	Low-level input leakage current	TXD = 0 V, V_{CC} = 5.5 V	–200	-100	–20	µA
$I_{LKG(OFF)}$	Unpowered leakage current	TXD = 5.5 V, V_{CC} = 0 V	–1	0	1	µA
C_I	Input Capacitance	V_{IN} = 0.4×sin(2×π×2×10^6×t)+2.5 V		5		pF
RXD Terminal (CAN Receive Data Output)						
V_{OH}	High-level output voltage	I_O = –2 mA, See Figure 7-3	0.8 V_{CC}			V
V_{OL}	Low-level output voltage	I_O = +2 mA, See Figure 7-3			0.2 V_{CC}	V
$I_{LKG(OFF)}$	Unpowered leakage current	RXD = 5.5 V, V_{CC} = 0 V	–1	0	1	µA
STB Terminal (Standby Mode Input)						
V_{IH}	High-level input voltage		0.7 V_{CC}			V
V_{IL}	Low-level input voltage				0.3 V_{CC}	V
I_{IH}	High-level input leakage current	V_{CC} = STB = 5.5 V	–2		2	µA
I_{IL}	Low-level input leakage current	V_{CC} = 5.5 V, STB = 0 V	–20		–2	µA
$I_{LKG(OFF)}$	Unpowered leakage current	STB = 5.5V, V_{CC} = 0 V	–1	0	1	µA

6.8 Switching Characteristics

Over recomended operating conditions with T_A = -40℃ to 125℃ (unless otherwise noted); Timing parameters apply to both CAN channels

PARAMETER		TEST CONDITIONS	MIN	TYP	MAX	UNIT
Device Switching Characteristics						
$t_{PROP(LOOP1)}$	Total loop delay, driver input (TXD) to receiver output (RXD), recessive to dominant	Normal mode, R_L = 60 Ω, C_L = 100 pF, $C_{L(RXD)}$ = 15 pF See Figure 7-4		125	210	ns
$t_{PROP(LOOP2)}$	Total loop delay, driver input (TXD) to receiver output (RXD), dominant to recessive	Normal mode, R_L = 60 Ω, C_L = 100 pF, $C_{L(RXD)}$ = 15 pF See Figure 7-4		150	210	ns
t_{MODE}	Mode change time, from normal to standby or from standby to normal	See Figure 7-5			20	µs
t_{WK_FILTER}	Filter time for a valid wake-up pattern	See Figure 8-5	0.5		1.8	µs
$t_{WK_TIMEOUT}$	Bus wake-up timeout	See Figure 8-5	0.8		6	ms
Driver Switching Characteristics						
t_{pHR}	Propagation delay time, high TXD to driver recessive (dominant to recessive)(1)	STB = 0 V , R_L = 60 Ω, C_L = 100 pF See Figure 7-2 and Figure 7-6	35	80	115	ns
t_{pLD}	Propagation delay time, low TXD to driver dominant (recessive to dominant)(1)		20	70	120	ns
$t_{sk(p)}$	Pulse skew (|tpHR - tpLD|)			20		ns
t_R	Differential output signal rise time			30		ns
t_F	Differential output signal fall time			50		ns
t_{TXD_DTO}	Dominant timeout		1.2		4.0	ms
Receiver Switching Characteristics						
t_{pRH}	Propagation delay time, bus recessive input to high output (dominant to recessive)(1)	STB = 0 V , $C_{L(RXD)}$ = 15 pF See Figure 7-3	40	90	150	ns
t_{pDL}	Propagation delay time, bus dominant input to low output (recessive to dominant)(1)		35	65	140	ns
t_R	RXD output signal rise time			10		ns

6.8 Switching Characteristics (continued)

Over recomended operating conditions with T_A = -40℃ to 125℃ (unless otherwise noted); Timing parameters apply to both CAN channels

PARAMETER		TEST CONDITIONS	MIN	TYP	MAX	UNIT
t_F	RXD output signal fall time			10		ns
(1)FD Timing Characteristics						
$t_{BIT(BUS)}$	Bit time on CAN bus output pins $t_{BIT(TXD)}$ = 500 ns	STB = 0 V, R_L = 60 Ω, C_L = 100 pF, $C_{L(RXD)}$ = 15 pF $\Delta t_{REC} = t_{BIT(RXD)} - t_{BIT(BUS)}$ See Figure 7-4	460		510	ns
$t_{BIT(BUS)}$	Bit time on CAN bus output pins $t_{BIT(TXD)}$ = 200 ns		160		210	ns
$t_{BIT(RXD)}$	Bit time on RXD output pins $t_{BIT(TXD)}$ = 500 ns		445		515	ns
$t_{BIT(RXD)}$	Bit time on RXD output pins $t_{BIT(TXD)}$ = 200 ns		145		215	ns
Δt_{REC}	Receiver timing symmetry $t_{BIT(TXD)}$ = 500 ns		-35		15	ns
Δt_{REC}	Receiver timing symmetry $t_{BIT(TXD)}$ = 200 ns		-35		15	ns

(1) Specified by design and characterization

Copyright © 2020 Texas Instruments Incorporated

6.9 Typical Characteristics

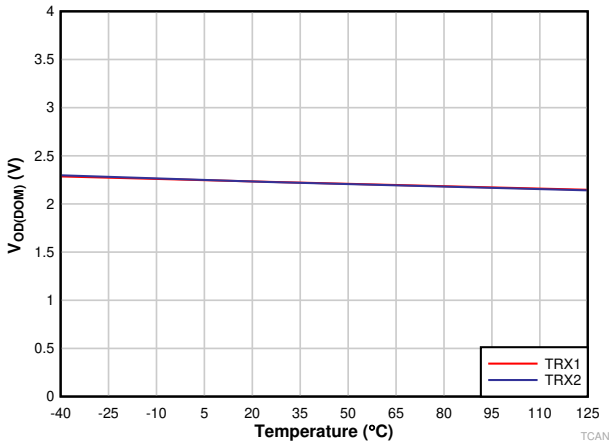

Note

V_{CC} = 5 V R_L = 60 Ω

Figure 6-1. $V_{OD(DOM)}$ vs Temperature Transceiver 1 & Transceiver 2

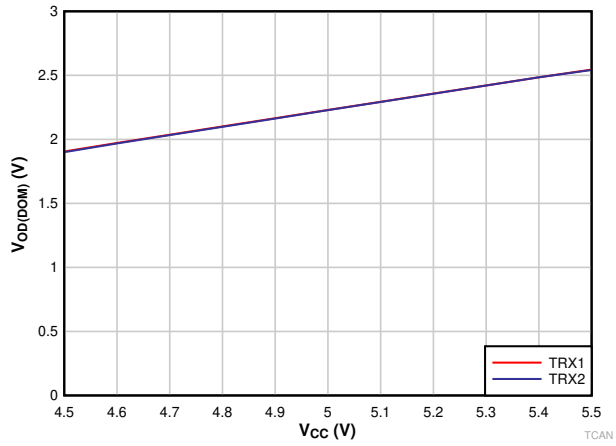

Note

Temp = 25°C R_L = 60 Ω

Figure 6-2. $V_{OD(DOM)}$ vs V_{CC} Transceiver 1 & Transceiver 2

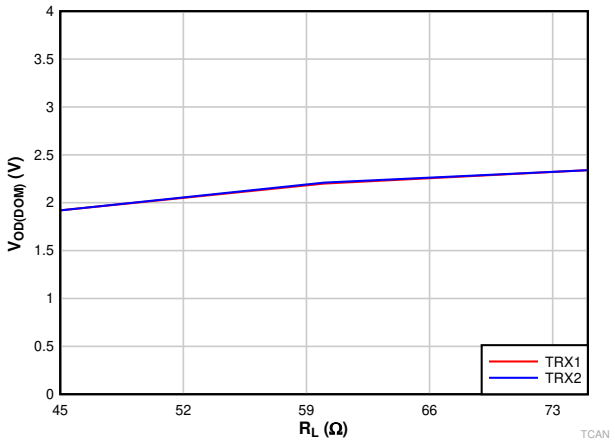

Note

V_{CC} = 5 V Temp = 25°C

Figure 6-3. $V_{OD(DOM)}$ vs Load Transceiver 1 & Transceiver 2

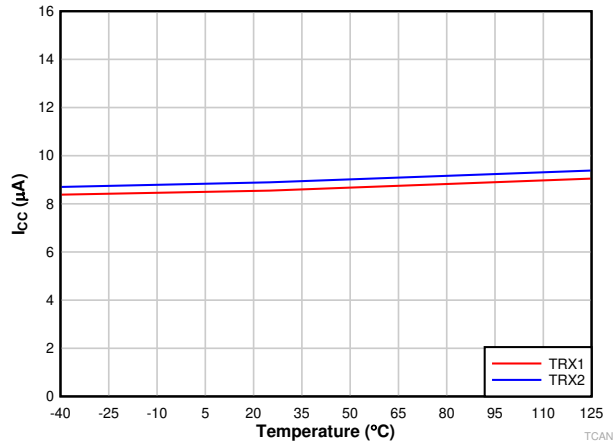

Note

V_{CC} = 5 V R_L = 60 Ω

Figure 6-4. I_{CC} Standby vs Temperature Transceiver 1 & Transceiver 2

7 Parameter Measurement Information

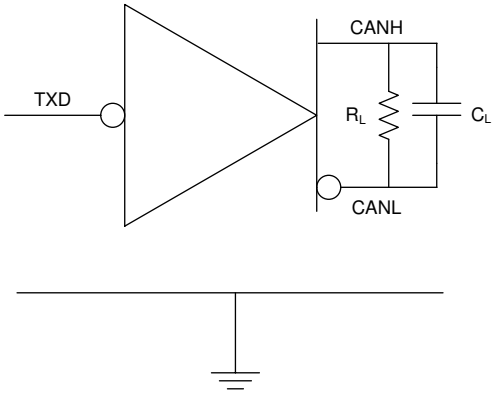

Figure 7-1. I_{CC} Test Circuit

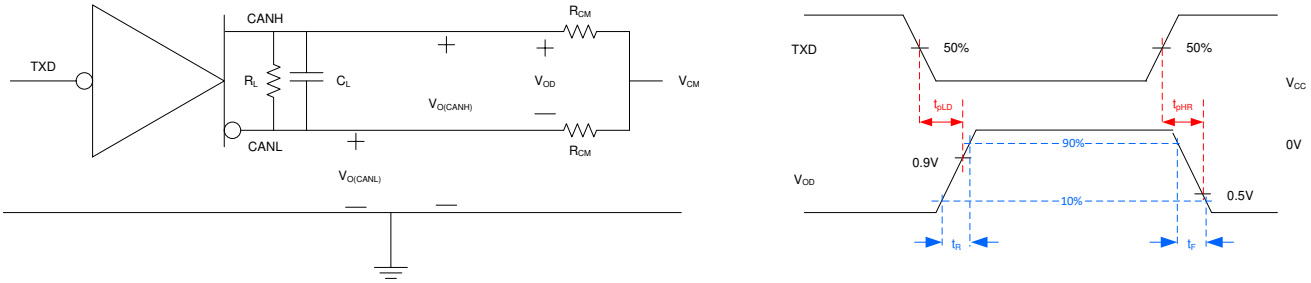

Figure 7-2. Driver Test Circuit and Measurement

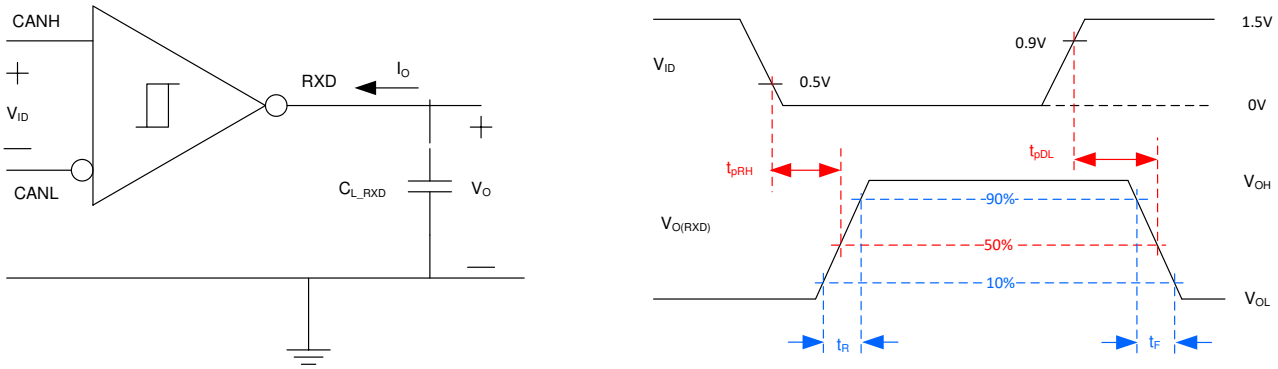

Figure 7-3. Receiver Test Circuit and Measurement

Copyright © 2020 Texas Instruments Incorporated

Table 7-1. Receiver Differential Input Voltage Threshold Test

Input (See Figure 7-3)			Output	
V_{CANH}	V_{CANL}	$\|V_{ID}\|$	RXD	
-11.5 V	-12.5 V	1000 mV	Low	V_{OL}
12.5 V	11.5 V	1000 mV		
-8.55 V	-9.45 V	900 mV		
9.45 V	8.55 V	900 mV		
-8.75 V	-9.25 V	500 mV	High	V_{OH}
9.25 V	8.75 V	500 mV		
-11.8 V	-12.2 V	400 mV		
12.2 V	11.8 V	400 mV		
Open	Open	X		

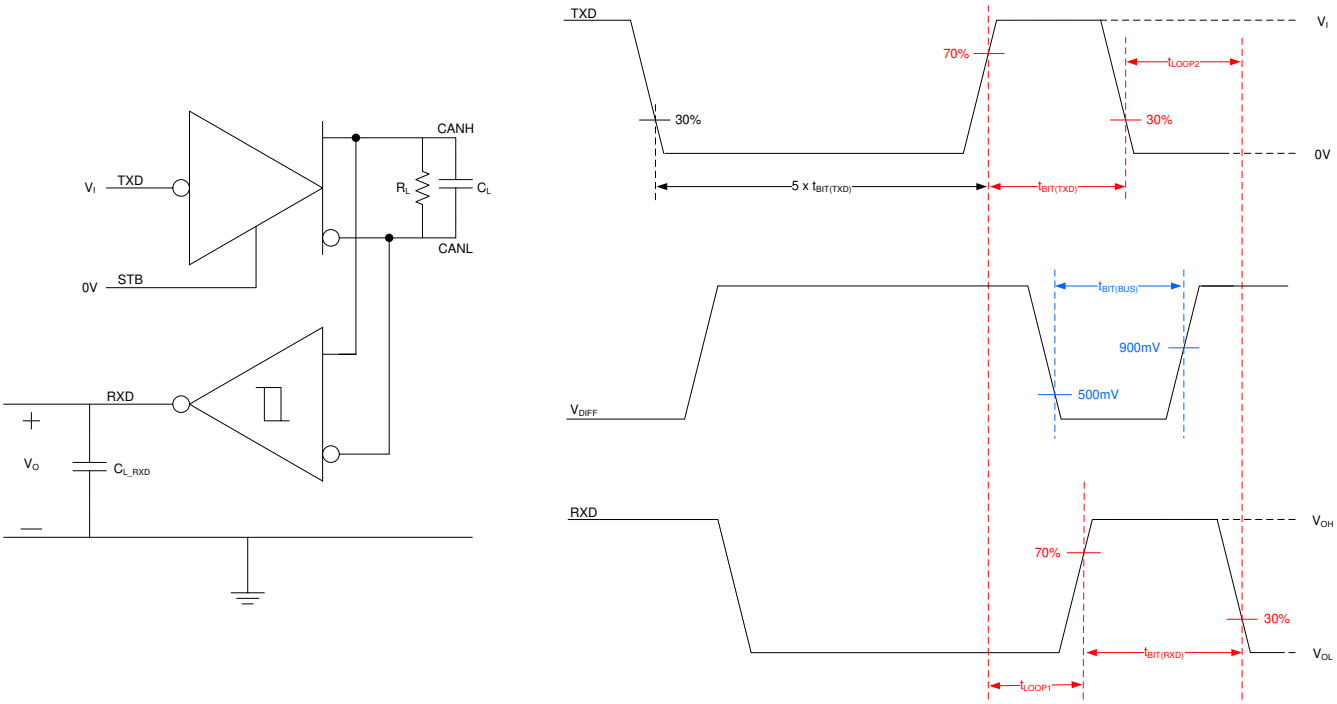

Figure 7-4. Transmitter and Receiver Timing Test Circuit and Measurement

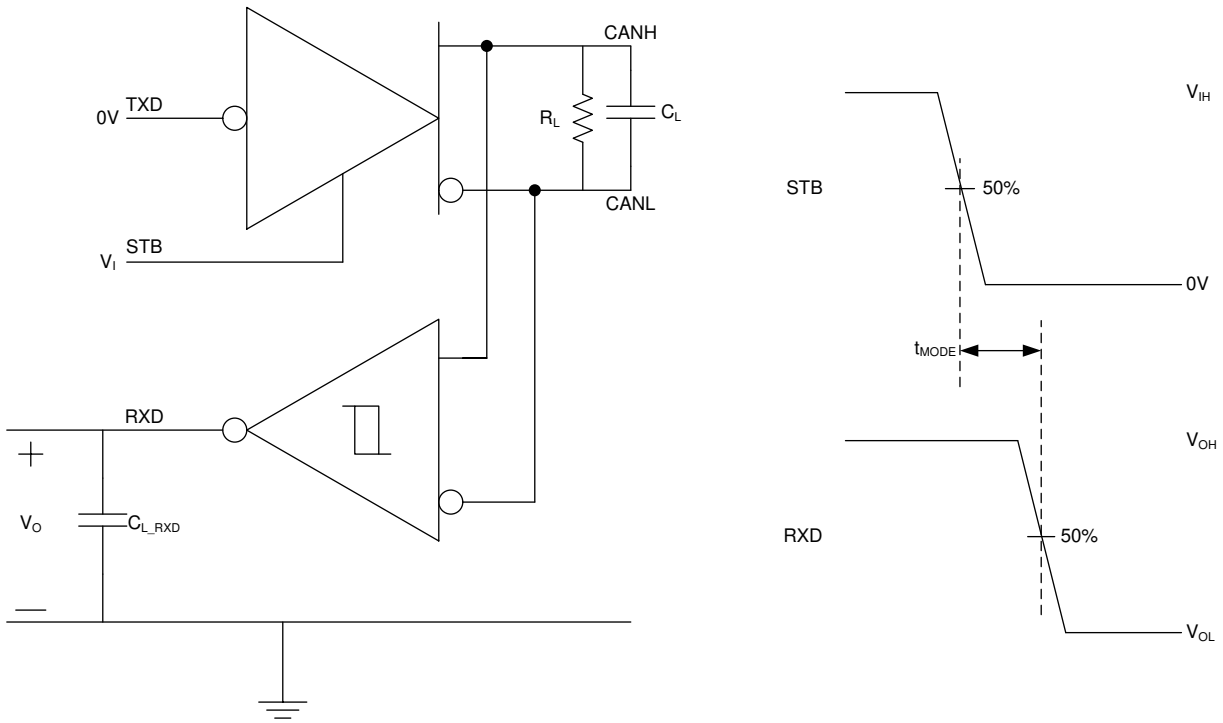

Figure 7-5. t_{MODE} Test Circuit and Measurement

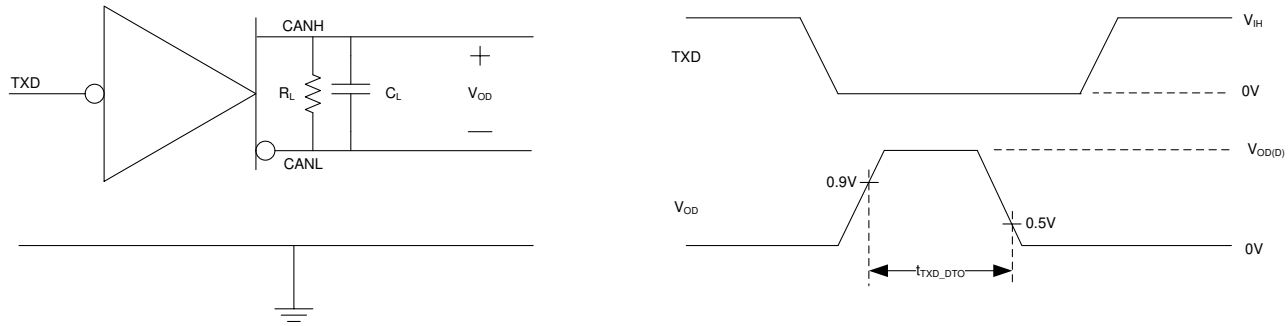

Figure 7-6. TXD Dominant Timeout Test Circuit and Measurement

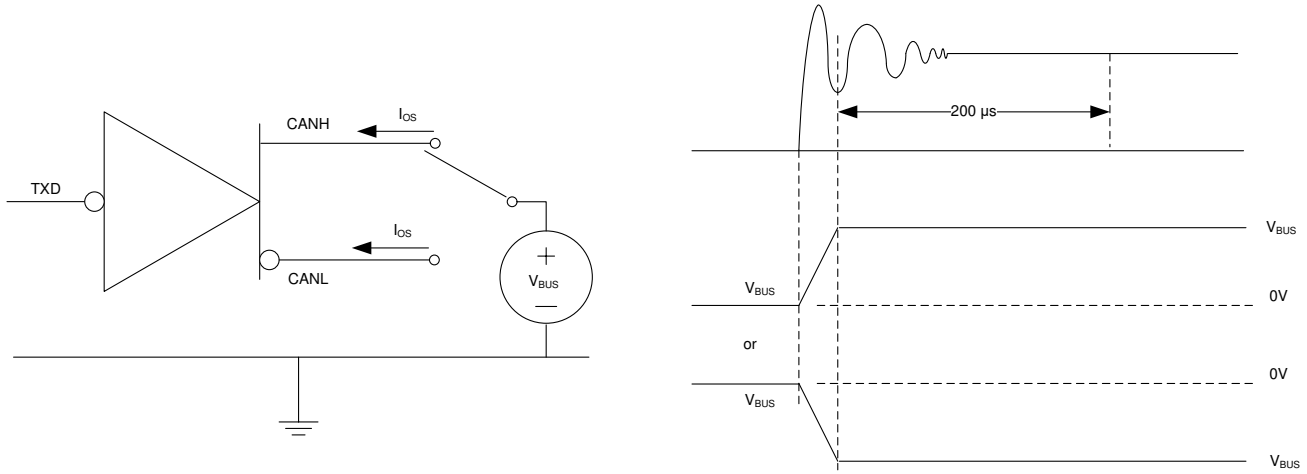

Figure 7-7. Driver Short-Circuit Current Test and Measurement

Copyright © 2020 Texas Instruments Incorporated

8 Detailed Description

8.1 Overview

The TCAN1046 meets or exceeds the specifications of the ISO 11898-2:2016 high speed CAN (Controller Area Network) physical layer standard. The device has been certified to the requirements of ISO 11898-2:2016 and ISO 11898-5:2007 physical layer requirements according to the GIFT/ICT high speed CAN test specification. The transceiver provides a number of different protection features making it ideal for the stringent automotive system requirements while also supporting CAN FD data rates up to 8 Mbps.

The TCAN1046 conforms to the following CAN standards:

- CAN transceiver physical layer standards:
  - ISO 11898-2:2016 High speed medium access unit
  - ISO 11898-5:2007 High speed medium access unit with low-power mode
  - SAE J2284-1: High Speed CAN (HSC) for Vehicle Applications at 125 kbps
  - SAE J2284-2: High Speed CAN (HSC) for Vehicle Applications at 250 kbps
  - SAE J2284-3: High Speed CAN (HSC) for Vehicle Applications at 500 kbps
  - SAE J2284-4: High-Speed CAN (HSC) for Vehicle Applications at 500 kbps with CAN FD Data at 2 Mbps
  - SAE J2284-5: High-Speed CAN (HSC) for Vehicle Applications at 500 kbps with CAN FD Data at 5 Mbps
  - ARINC 825-4 General Standardization of CAN (Controller Area Network) Bus Protocol For Airborne Use
- Conformance test requirements:
  - ISO 16845-2 Road vehicles – Controller area network (CAN) conformance test plan Part 2: High-speed medium access unit conformance test plan

Copyright © 2020 Texas Instruments Incorporated

8.2 Functional Block Diagram

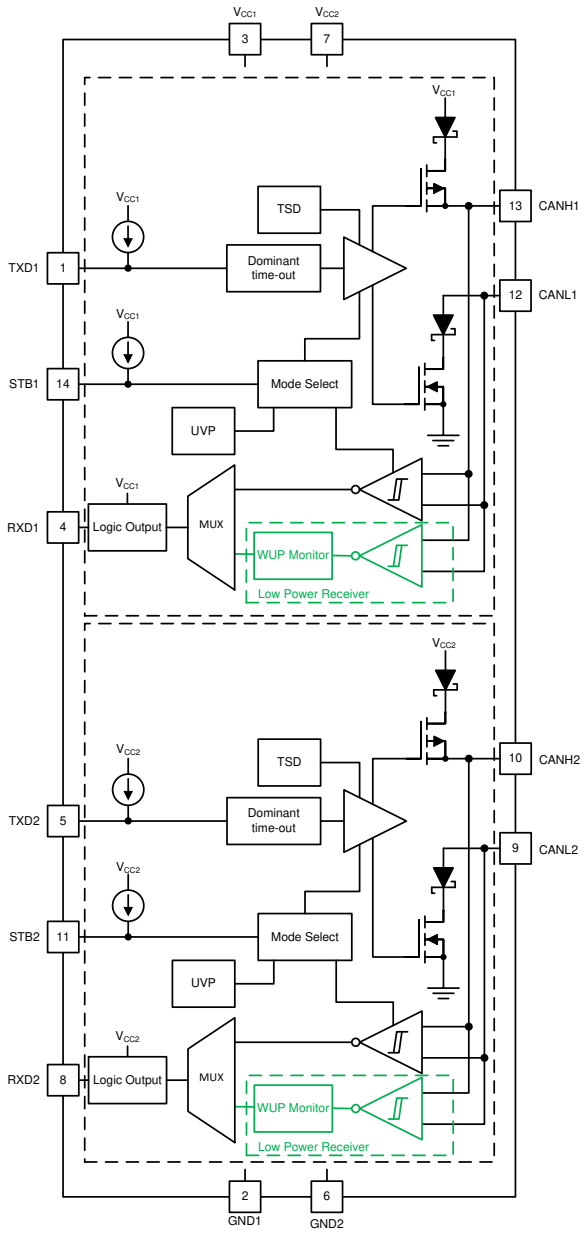

Figure 8-1. Block Diagram

Copyright © 2020 Texas Instruments Incorporated

8.3 Feature Description

8.3.1 Pin Description

8.3.1.1 TXD1 and TXD2

TXD1 and TXD2 are the logic-level input signals, referenced to V_{CC}, from a CAN controller to the TCAN1046.

8.3.1.2 GND1 and GND2

GND1 and GND2 are ground pins of the transceiver, both must be connect to the PCB ground.

8.3.1.3 V_{CC1} and V_{CC2}

V_{CC1} and V_{CC2} provide the 5-V nominal power supply input to their respective CAN transceiver.

8.3.1.4 RXD1 and RXD2

RXD1 and RXD2 are the logic-level output signals from the TCAN1046 to a CAN controller.

8.3.1.5 CANH1, CANL1, CANH2, and CANL1

These are the CAN high and CAN low differential bus pins. These pins are connected to the CAN transceiver and the low-voltage WUP CAN receiver.

8.3.1.6 STB1 and STB2 (Standby)

The STB1 and STB2 are input pins used for mode control of the TCAN1046. STB1 and STB2 can be supplied from either the system processor or from a static system voltage source. If normal mode is the only intended mode of operation than the STB pins can be tied directly to GND.

8.3.2 CAN Bus States

The CAN bus has two logical states during operation: recessive and dominant. See Figure 8-2 and Figure 8-3 .

A dominant bus state occurs when the bus is driven differentially and corresponds to a logic low on the TXD1, TXD2, RXD1 and RXD2 pins. A recessive bus state occurs when the bus is biased to $V_{CC}/2$ via the high-resistance internal input resistors R_{IN}) of the receiver and corresponds to a logic high on the TXD1, TXD2, RXD1 and RXD2 pins.

A dominant state overwrites the recessive state during arbitration. Multiple CAN nodes may be transmitting a dominant bit at the same time during arbitration, and in this case the differential voltage of the bus is greater than the differential voltage of a single driver.

The TCAN1046 transceiver implements a low-power standby (STB) mode which enables a third bus state where the bus pins are weakly biased to ground via the high resistance internal resistors of the receiver. See Figure 8-2 and Figure 8-3.

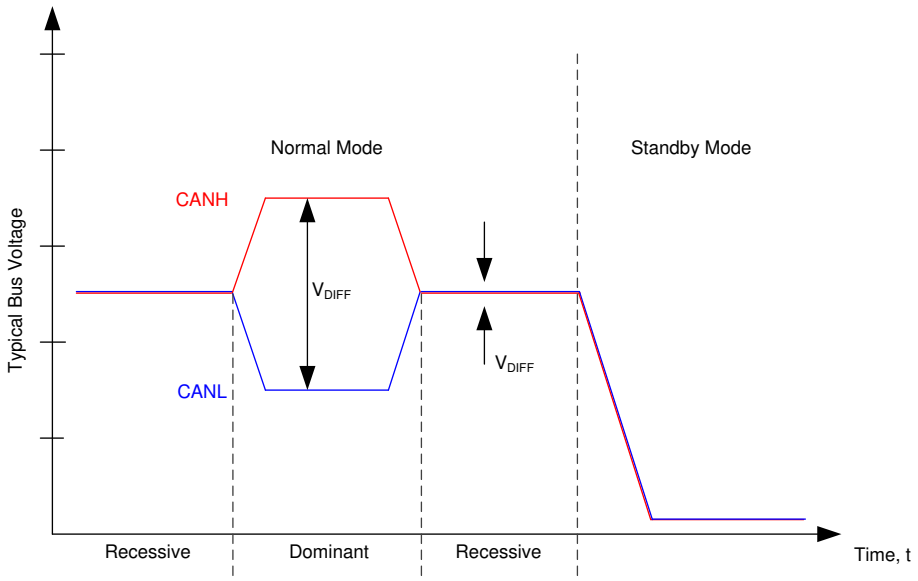

Figure 8-2. Bus States

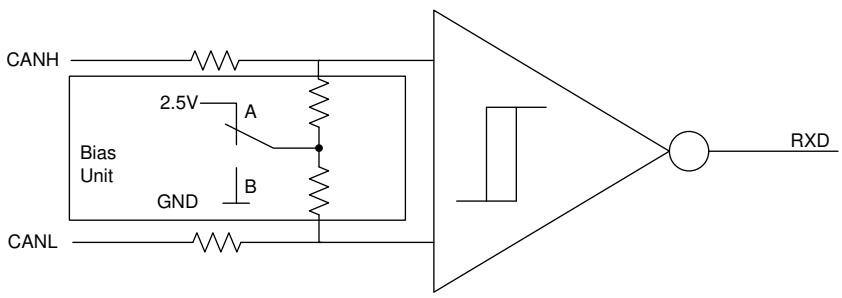

A. Normal Mode
B. Standby Mode

Figure 8-3. Simplified Recessive Common Mode Bias Unit and Receiver

8.3.3 TXD Dominant Timeout (DTO)

During normal mode, the only mode where the CAN driver is active, the TXD DTO circuit prevents the local node from blocking network communication in the event of a hardware or software failure where TXD is held dominant longer than the timeout period t_{TXD_DTO}. The TXD DTO circuit is triggered by a falling edge on TXD. If no rising edge is seen before the timeout period of the circuit, t_{TXD_DTO}, the CAN driver is disabled. This frees the bus for communication between other nodes on the network. The CAN driver is reactivated when a recessive signal is seen on the TXD pin, thus clearing the dominant time out. The receiver remains active and biased to $V_{CC}/2$ and the RXD output reflects the activity on the CAN bus during the TXD DTO fault.

The minimum dominant TXD time allowed by the TXD DTO circuit limits the minimum possible transmitted data rate of the device. The CAN protocol allows a maximum of eleven successive dominant bits (on TXD) for the worst case, where five successive dominant bits are followed immediately by an error frame. The minimum transmitted data rate may be calculated using Equation 1.

$$\text{Minimum Data Rate} = 11 \text{ bits} / t_{TXD_DTO} = 11 \text{ bits} / 1.2 \text{ ms} = 9.2 \text{ kbps} \quad (1)$$

Copyright © 2020 Texas Instruments Incorporated

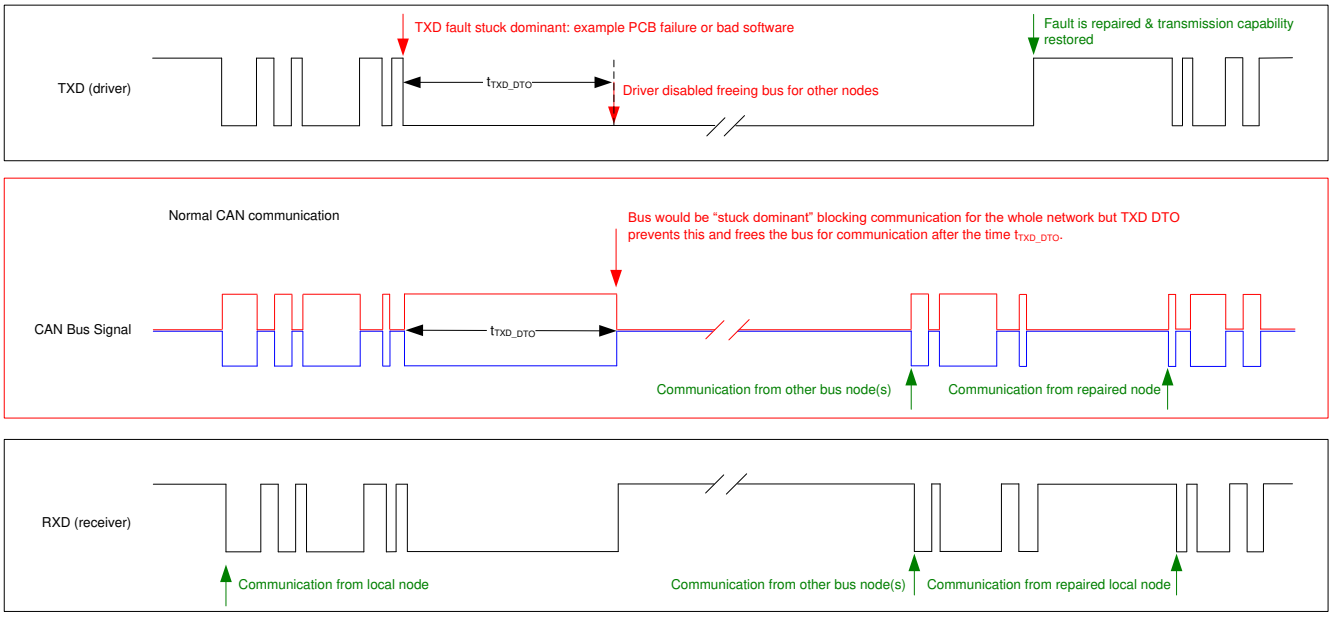

Figure 8-4. Example Timing Diagram for TXD Dominant Timeout

8.3.4 CAN Bus Short Circuit Current Limiting

The TCAN1046 has several protection features that limit the short circuit current when a CAN bus line is shorted. These include CAN driver current limiting in the dominant and recessive states and TXD dominant state timeout which prevents permanently having the higher short circuit current of a dominant state in case of a system fault. During CAN communication the bus switches between the dominant and recessive states, thus the short circuit current may be viewed as either the current during each bus state or as a DC average current. When selecting termination resistors or a common mode choke for the CAN design the average power rating, $I_{OS(AVG)}$, should be used. The percentage dominant is limited by the TXD DTO and the CAN protocol which has forced state changes and recessive bits due to bit stuffing, control fields, and interframe space. These ensure there is a minimum amount of recessive time on the bus even if the data field contains a high percentage of dominant bits.

The average short circuit current of the bus depends on the ratio of recessive to dominant bits and their respective short circuit currents. The average short circuit current may be calculated using Equation 2.

$$I_{OS(AVG)} = \%\ Transmit \times [(\%\ REC_Bits \times I_{OS(SS)_REC}) + (\%\ DOM_Bits \times I_{OS(SS)_DOM})] + [\%\ Receive \times I_{OS(SS)_REC}] \quad (2)$$

Where:

- $I_{OS(AVG)}$ is the average short circuit current
- % Transmit is the percentage the node is transmitting CAN messages
- % Receive is the percentage the node is receiving CAN messages
- % REC_Bits is the percentage of recessive bits in the transmitted CAN messages
- % DOM_Bits is the percentage of dominant bits in the transmitted CAN messages
- $I_{OS(SS)_REC}$ is the recessive steady state short circuit current
- $I_{OS(SS)_DOM}$ is the dominant steady state short circuit current

This short circuit current and the possible fault cases of the network should be taken into consideration when sizing the power supply used to generate the transceivers V_{CC} supply.

8.3.5 Thermal Shutdown (TSD)

If the junction temperature of the TCAN1046 exceeds the thermal shutdown threshold, T_{TSD}, the device turns off the CAN driver circuitry and blocks the TXD to bus transmission path. The shutdown condition is cleared when the junction temperature of the device drops below T_{TSD}. The CAN bus pins are biased to $V_{CC}/2$ during a TSD fault and the receiver to RXD path remains operational. The TCAN1046 TSD circuit includes hysteresis which prevents the CAN driver output from oscillating during a TSD fault.

8.3.6 Undervoltage Lockout

The supply pin, V_{CC}, has undervoltage detection that places the TCAN1046 into a protected state. This protects the bus during an undervoltage event on either supply pin.

Table 8-1. Undervoltage Lockout

V_{CC}	DEVICE STATE	BUS	RXD PIN
> UV_{VCC}	Normal	Per TXD	Mirrors bus
< UV_{VCC}	Protected	High impedance Weak pull-down to ground(1)	High impedance

(1) V_{CC} = GND, see $I_{LKG(OFF)}$ in *Section 6.7*

Once the undervoltage condition is cleared and t_{MODE} has expired the TCAN1046 transitions to normal mode and the host controller can send and receive CAN traffic again.

8.3.7 Unpowered Device

The TCAN1046 is designed to be an ideal passive or no load to the CAN bus if the device is unpowered. The bus pins were designed to have low leakage currents when the device is unpowered, so they do not load the bus. This is critical if some nodes of the network are unpowered while the rest of the of network remains operational.

The logic pins also have low leakage currents when the device is unpowered, so they do not load other circuits which may remain powered.

8.3.8 Floating pins

The TCAN1046 has internal pull-ups on critical pins which place the device into known states if the pin floats. This internal bias should not be relied upon by design though, especially in noisy environments, but instead should be considered a failsafe protection feature.

When a CAN controller supporting open-drain outputs is used an adequate external pull-up resistor must be chosen. This ensures that the TXD output of the CAN controller maintains acceptable bit time to the input of the CAN transceiver. See Table 8-2 for details on pin bias conditions.

Table 8-2. Pin Bias

Pin	Pull-up or Pull-down	Comment
TXD1 and TXD2	Pull-up	Weakly biases TXD1 and TXD2 towards recessive to prevent bus blockage or TXD DTO triggering
STB1 and STB2	Pull-up	Weakly biases STB1 and STB2 towards low-power standby mode to prevent excessive system power

8.4 Device Functional Modes

8.4.1 Operating Modes

The TCAN1046 has two main operating modes; normal mode and standby mode. Operating mode selection is made by applying a high or low level to the STB1 and STB2 pins on the TCAN1046-Q1 device.

Copyright © 2020 Texas Instruments Incorporated

Table 8-3. Operating Modes

STB	Device Mode	Driver	Receiver	RXD Pin
High	Low current standby mode with bus wake-up	Disabled	Low-power receiver and bus monitor enable	High (recessive) until valid WUP is received See section 8.3.3.1
Low	Normal Mode	Enabled	Enabled	Mirrors bus state

8.4.2 Normal Mode

This is the normal operating mode of the TCAN1046. The CAN driver and receiver are fully operational and CAN communication is bi-directional. The driver is translating a digital input on the TXD1 and TXD2 inputs to a differential output on the CANH1, CANL1 and CANH2, CANL2 bus pins. The receiver is translating the differential signal from CANH1, CANL1 and CANH2, CANL2 to a digital output on the RXD1 and RXD2 outputs.

8.4.3 Standby Mode

This is the low-power mode of the TCAN1046. The CAN driver and main receiver are switched off and bi-directional CAN communication is not possible. The low-power receiver and bus monitor circuits are enabled to allow for RXD wake-up requests via the CAN bus. A wake-up request is output to RXD1 or RXD2 depending on the channel which received the WUP as shown in Figure 8-5. The local CAN protocol controller should monitor RXD for transitions (high-to-low) and reactivate the device to normal mode by pulling the STB1 and STB2 pin low . The CAN bus pins are weakly pulled to GND in this mode; see Figure 8-2 and Figure 8-3.

8.4.3.1 Remote Wake Request via Wake-Up Pattern (WUP) in Standby Mode

The TCAN1046 supports a remote wake-up request on both CAN channels that is used to indicate to the host controller that the bus is active and the node should return to normal operation.

The device uses the multiple filtered dominant wake-up pattern (WUP) from the ISO 11898-2:2016 standard to qualify bus activity. Once a valid WUP has been received, the wake request is indicated to the controller by a falling edge and low period corresponding to a filtered dominant on the RXD1 or RXD2 output of the TCAN1046.

The WUP consists of a filtered dominant pulse, followed by a filtered recessive pulse, and finally by a second filtered dominant pulse. The first filtered dominant initiates the WUP, and the bus monitor then waits on a filtered recessive; other bus traffic does not reset the bus monitor. Once a filtered recessive is received the bus monitor is waiting for a filtered dominant and again, other bus traffic does not reset the bus monitor. Immediately upon reception of the second filtered dominant the bus monitor recognizes the WUP and drives the RXD1 or RXD2 output low every time an additional filtered dominant signal is received from the bus.

For a dominant or recessive to be considered filtered, the bus must be in that state for more than the t_{WK_FILTER} time. Due to variability in t_{WK_FILTER} the following scenarios are applicable. Bus state times less than $t_{WK_FILTER(MIN)}$ are never detected as part of a WUP and thus no wake request is generated. Bus state times between $t_{WK_FILTER(MIN)}$ and $t_{WK_FILTER(MAX)}$ may be detected as part of a WUP and a wake-up request may be generated. Bus state times greater than $t_{WK_FILTER(MAX)}$ are always detected as part of a WUP, and thus a wake request is always generated. See Figure 8-5 for the timing diagram of the wake-up pattern.

The pattern and t_{WK_FILTER} time used for the WUP prevents noise and bus stuck dominant faults from causing false wake-up requests while allowing any valid message to initiate a wake-up request.

The ISO 11898-2:2016 standard has defined times for a short and long wake-up filter time. The t_{WK_FILTER} timing for the device has been picked to be within the minimum and maximum values of both filter ranges. This timing has been chosen such that a single bit time at 500 kbps, or two back-to-back bit times at 1 Mbps triggers the filter in either bus state. Any CAN frame at 500 kbps or less would contain a valid WUP.

For an additional layer of robustness and to prevent false wake-ups, the device implements a wake-up timeout feature. For a remote wake-up event to successfully occur, the entire WUP must be received within the timeout value $t \leq t_{WK_TIMEOUT}$. If not, the internal logic is reset and the transceiver remains in its current state without waking up. The full pattern must then be transmitted again, conforming to the constraints mentioned in this section. See Figure 8-5 for the timing diagram of the wake-up pattern with wake timeout feature.

Copyright © 2020 Texas Instruments Incorporated

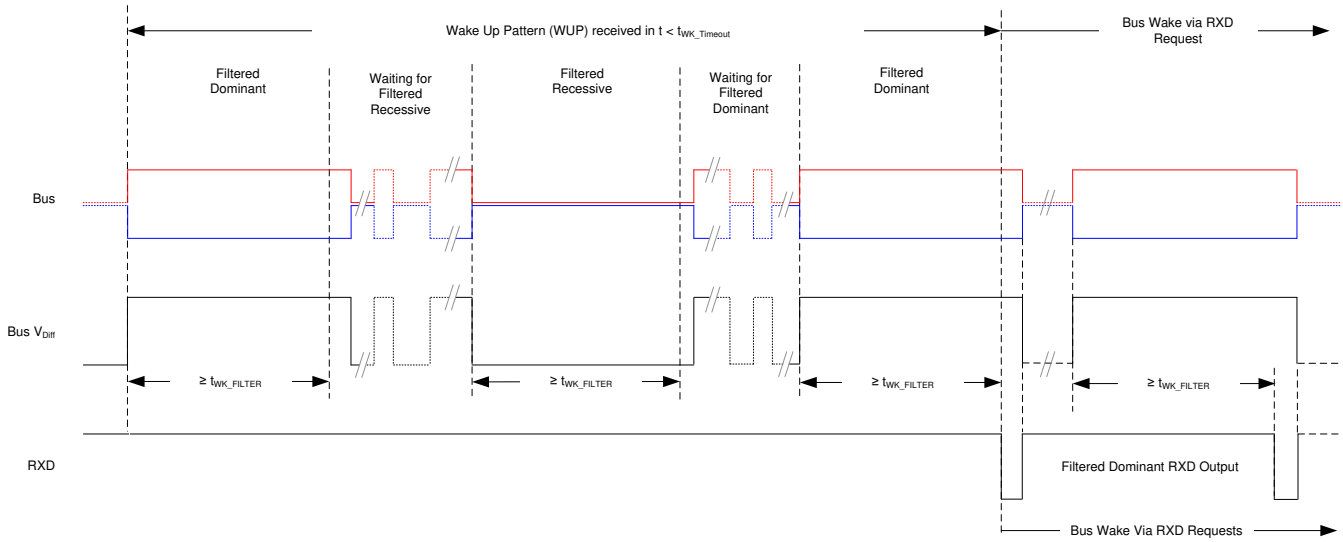

Figure 8-5. Wake-Up Pattern (WUP) with $t_{WK_TIMEOUT}$

8.4.4 Driver and Receiver Function

The digital logic input and output levels for the TCAN1046 are CMOS levels with respect to V_{CC} and are compatibility with protocol controllers having 5 V I/O levels.

Table 8-4. Driver Function Table

Device Mode	TXD Input	Bus Outputs		Driven Bus State[(2)]
		CANH	CANL	
Normal	Low	High	Low	Dominant
	High or open	High impedance	High impedance	Biased recessive[(3)]
Standby	X[(1)]	High impedance	High impedance	Weak pull-down to ground[(3)]

(1) X = irrelevant
(2) For bus state and bias see Figure 8-2 and Figure 8-3
(3) See R_{IN} in *Section 6.7*

Table 8-5. Receiver Function Table Normal and Standby Mode

Device Mode	CAN Differential Inputs $V_{ID} = V_{CANH} – V_{CANL}$	Bus State	RXD Pin
Normal	$V_{ID} \geq 0.9$ V	Dominant	Low
	0.5 V < V_{ID} < 0.9 V	Undefined	Undefined
	$V_{ID} \leq 0.5$ V	Recessive	High
Standby	$V_{ID} \geq 1.15$ V	Dominant	High Low if a remote wake event occurred See Figure 8-5
	0.4 V < V_{ID} < 1.15 V	Undefined	
	$V_{ID} \leq 0.4$ V	Recessive	
Any	Open ($V_{ID} \approx 0$ V)	Open	High

Copyright © 2020 Texas Instruments Incorporated

9 Application and Implementation

Note

Information in the following applications sections is not part of the TI component specification, and TI does not warrant its accuracy or completeness. TI's customers are responsible for determining suitability of components for their purposes. Customers should validate and test their design implementation to confirm system functionality.

9.1 Application Information

9.2 Typical Application

The TCAN1046 transceiver can be used in applications with a host controller or FPGA that includes the link layer portion of the CAN protocol. Figure 9-1 shows a typical configuration for 5 V controller applications. The bus termination is shown for illustrative purposes.

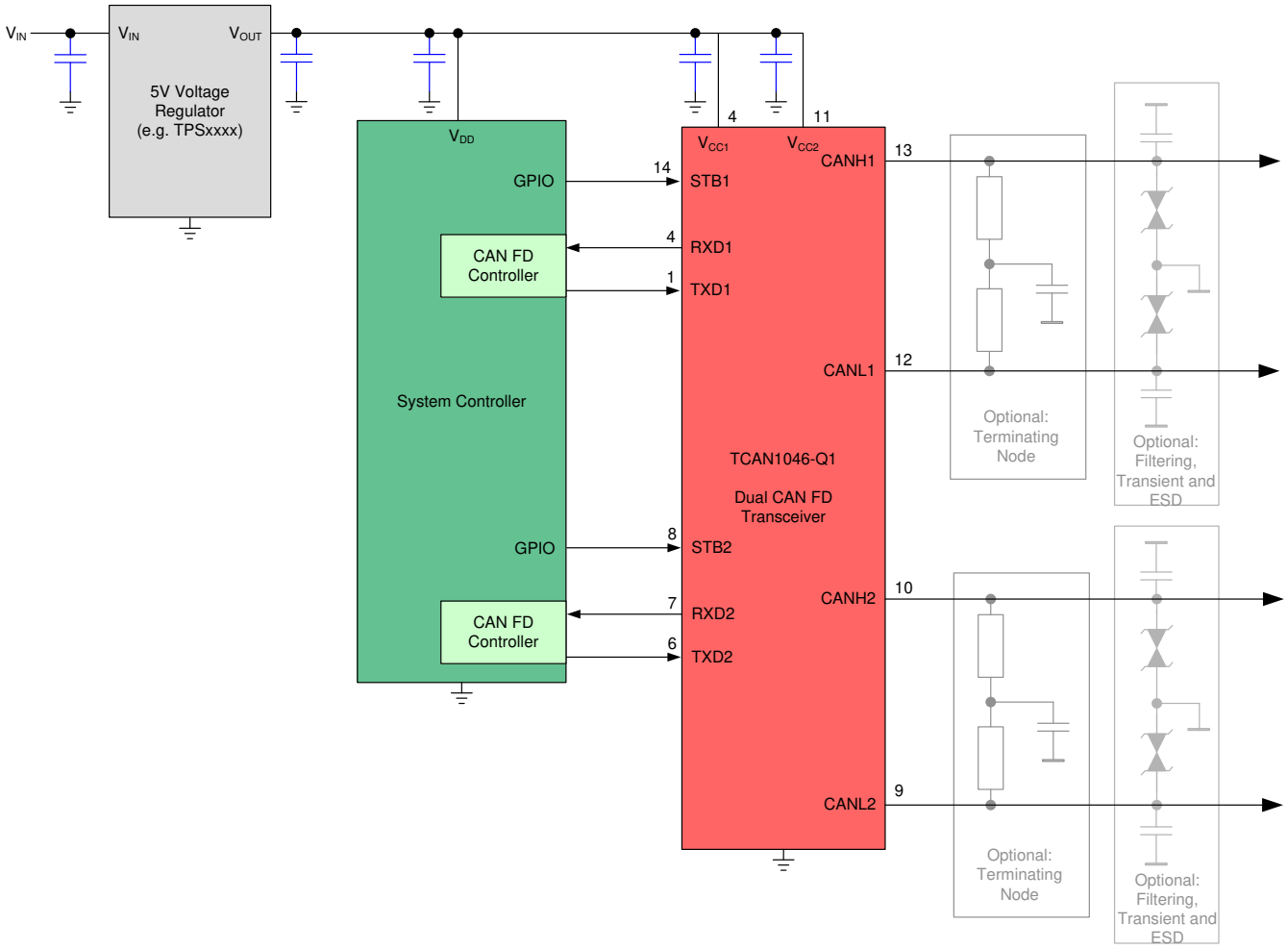

Figure 9-1. Transceiver Application Using 5 V I/O Connections

9.2.1 Design Requirements

9.2.1.1 CAN Termination

Termination may be a single 120-Ω resistor at each end of the bus, either on the cable or in a terminating node. If filtering and stabilization of the common-mode voltage of the bus is desired then split termination may be used, see Figure 9-2. Split termination improves the electromagnetic emissions behavior of the network by filtering higher-frequency common-mode noise that may be present on the differential signal lines.

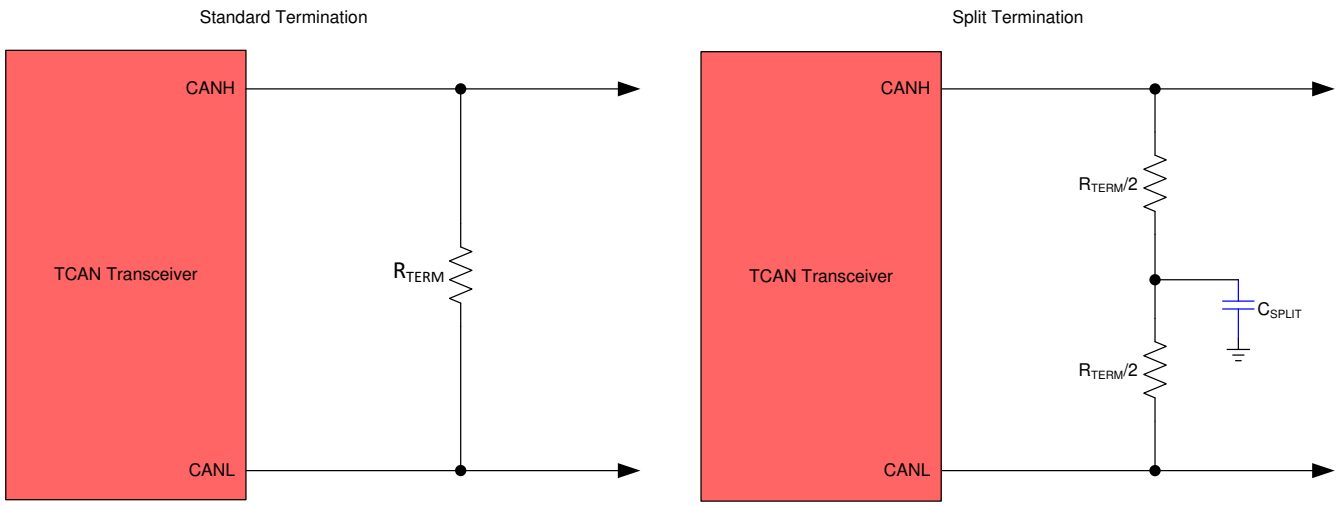

Figure 9-2. CAN Bus Termination Concepts

9.2.2 Detailed Design Procedures

9.2.2.1 Bus Loading, Length and Number of Nodes

A typical CAN application may have a maximum bus length of 40 meters and maximum stub length of 0.3 m. However, with careful design, users can have longer cables, longer stub lengths, and many more nodes to a bus. A high number of nodes requires a transceiver with high input impedance such as the TCAN1046.

Many CAN organizations and standards have scaled the use of CAN for applications outside the original ISO 11898-2 standard. They made system level trade off decisions for data rate, cable length, and parasitic loading of the bus. Examples of these CAN systems level specifications are ARINC 825, CANopen, DeviceNet, SAE J2284, SAE J1939, and NMEA 2000.

A CAN network system design is a series of tradeoffs. In the ISO 11898-2:2016 specification the driver differential output is specified with a bus load that can range from 50 Ω to 65 Ω where the differential output must be greater than 1.5 V. The TCAN1046 is specified to meet the 1.5-V requirement down to 50 Ω and is specified to meet 1.4-V differential output at 45Ω bus load. The differential input resistance of the TCAN1046 is a minimum of 40 kΩ. If 100 TCAN1046 transceivers are in parallel on a bus, this is equivalent to a 400-Ω differential load in parallel with the nominal 60 Ω bus termination which gives a total bus load of approximately 52 Ω. Therefore, the TCAN1046 theoretically supports over 100 transceivers on a single bus segment. However, for a CAN network design margin must be given for signal loss across the system and cabling, parasitic loadings, timing, network imbalances, ground offsets and signal integrity thus a practical maximum number of nodes is often lower. Bus length may also be extended beyond 40 meters by careful system design and data rate tradeoffs. For example, CANopen network design guidelines allow the network to be up to 1 km with changes in the termination resistance, cabling, less than 64 nodes and significantly lowered data rate.

This flexibility in CAN network design is one of the key strengths of the various extensions and additional standards that have been built on the original ISO 11898-2 CAN standard. However, when using this flexibility the CAN network system designer must take the responsibility of good network design to ensure robust network operation.

Copyright © 2020 Texas Instruments Incorporated

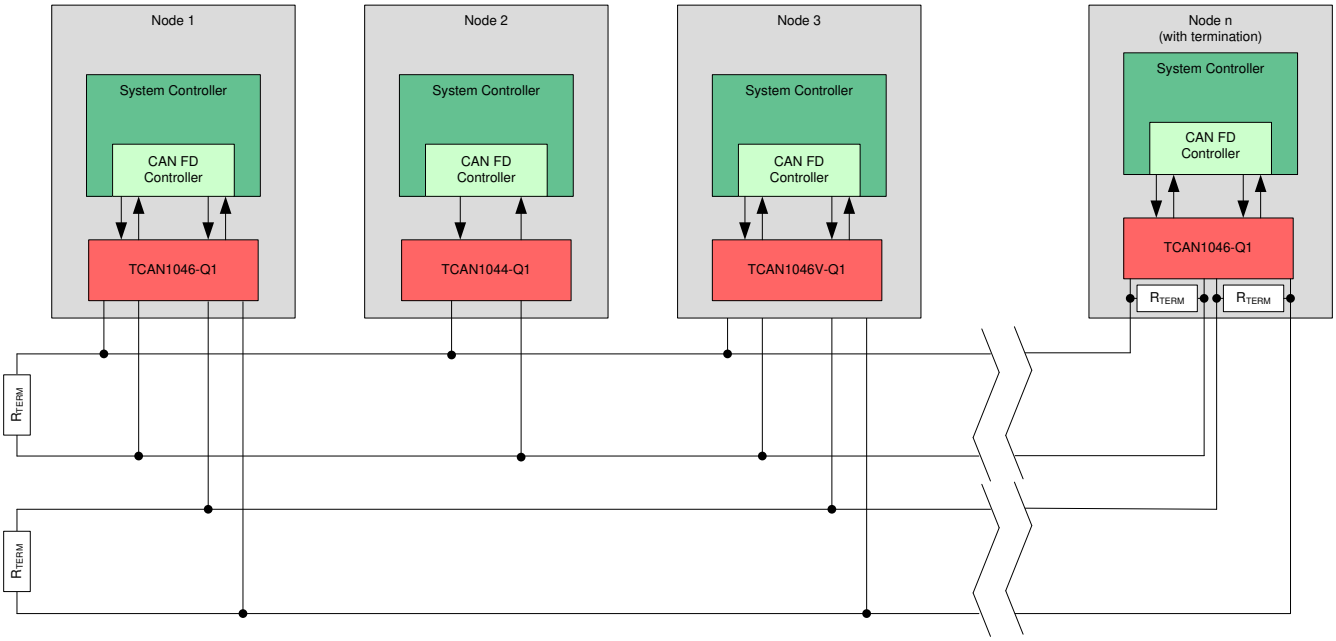

Figure 9-3. Typical CAN Bus

9.2.3 Application Curves

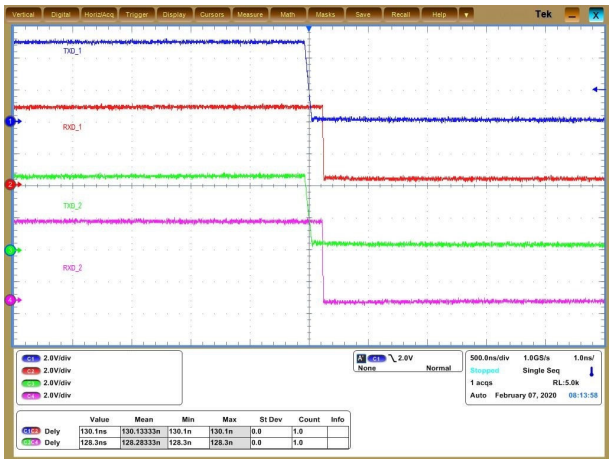

V_{CC} = 5 V R_L = 60 Ω

Figure 9-4. $t_{PROP(LOOP1)}$ Transceiver 1 & Transceiver 2

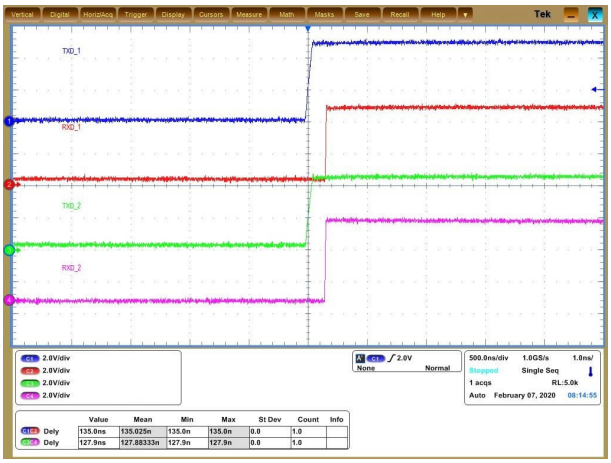

V_{CC} = 5 V R_L = 60 Ω

Figure 9-5. $t_{PROP(LOOP2)}$ Transceiver 1 & Transceiver 2

10 Power Supply Recommendations

The TCAN1046 dual transceiver is designed to operate with a main V_{CC1} and V_{CC2} input voltage supply range between 4.5 V and 5.5 V. The V_{CC} supply inputs must be well regulated. A decoupling capacitor, typically 100 nF, should be placed near the CAN transceiver's main V_{CC1} and V_{CC2} supply pins.

Layout

Robust and reliable CAN node design may require special layout techniques depending on the application and automotive design requirements. Since transient disturbances have high frequency content and a wide bandwidth, high-frequency layout techniques should be applied during PCB design.

11.1 Layout Guidelines

- Place the protection and filtering circuitry close to the bus connector, J1, to prevent transients, ESD, and noise from propagating onto the board. This layout example shows optional transient voltage suppression (TVS) diodes, D1 and D2, which may be implemented if the system-level requirements exceed the specified rating of the transceiver. This example also shows optional bus filter capacitors C4, C5, C6, and C8.
- Design the bus protection components in the direction of the signal path. Do not force the transient current to divert from the signal path to reach the protection device.
- Decoupling capacitors should be placed as close as possible to the supply pins V_{CC1} and V_{CC2} of the transceiver.
- Use at least two vias for supply and ground connections of bypass capacitors and protection devices to minimize trace and via inductance.

Note

High frequency current follows the path of least impedance and not the path of least resistance.

- This layout example shows how split termination could be implemented on the CAN node. The termination is split into two pairs of resistors, R7, R8, R9, and R10, with the center or split tap of the termination connected to ground via capacitors C3 and C7. Split termination provides common mode filtering for the bus. See Section 9.2.1.1, Section 8.3.4, and Equation 2 for information on termination concepts and power ratings needed for the termination resistor(s).

11.2 Layout Example

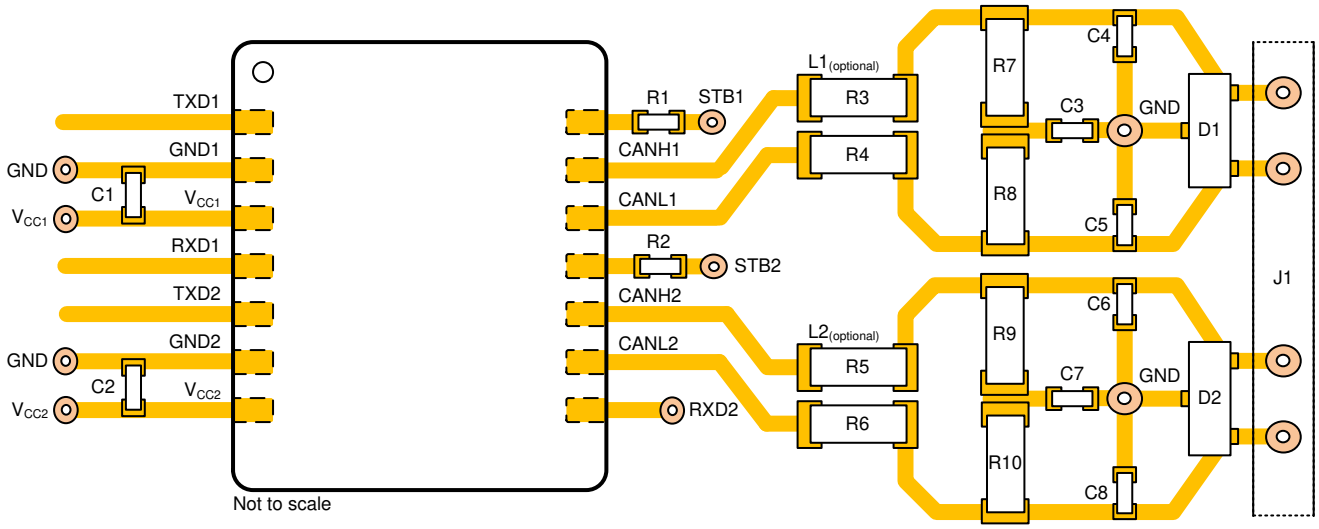

Figure 11-1. Layout Example

Copyright © 2020 Texas Instruments Incorporated

11 Device and Documentation Support

11.1 Documentation Support

11.1.1 Related Links

The table below lists quick access links. Categories include technical documents, support and community resources, tools and software, and quick access to order now.

11.2 Receiving Notification of Documentation Updates

To receive notification of documentation updates, navigate to the device product folder on ti.com. Click on *Subscribe to updates* to register and receive a weekly digest of any product information that has changed. For change details, review the revision history included in any revised document.

11.3 Support Resources

TI E2E™ support forums are an engineer's go-to source for fast, verified answers and design help — straight from the experts. Search existing answers or ask your own question to get the quick design help you need.

Linked content is provided "AS IS" by the respective contributors. They do not constitute TI specifications and do not necessarily reflect TI's views; see TI's Terms of Use.

11.4 Trademarks

TI E2E™ is a trademark of Texas Instruments.
All other trademarks are the property of their respective owners.

11.5 Electrostatic Discharge Caution

This integrated circuit can be damaged by ESD. Texas Instruments recommends that all integrated circuits be handled with appropriate precautions. Failure to observe proper handling and installation procedures can cause damage.

ESD damage can range from subtle performance degradation to complete device failure. Precision integrated circuits may be more susceptible to damage because very small parametric changes could cause the device not to meet its published specifications.

11.6 Glossary

TI Glossary This glossary lists and explains terms, acronyms, and definitions.

Mechanical, Packaging, and Orderable Information

The following pages include mechanical, packaging, and orderable information. This information is the most current data available for the designated devices. This data is subject to change without notice and revision of this document. For browser-based versions of this data sheet, refer to the left-hand navigation.

PACKAGING INFORMATION

Orderable Device	Status (1)	Package Type	Package Drawing	Pins	Package Qty	Eco Plan (2)	Lead finish/ Ball material (6)	MSL Peak Temp (3)	Op Temp (°C)	Device Marking (4/5)	Samples
TCAN1046DMTRQ1	ACTIVE	VSON	DMT	14	3000	RoHS & Green	NIPDAU | SN	Level-2-260C-1 YEAR	-40 to 125	1046	Samples

(1) The marketing status values are defined as follows:
ACTIVE: Product device recommended for new designs.
LIFEBUY: TI has announced that the device will be discontinued, and a lifetime-buy period is in effect.
NRND: Not recommended for new designs. Device is in production to support existing customers, but TI does not recommend using this part in a new design.
PREVIEW: Device has been announced but is not in production. Samples may or may not be available.
OBSOLETE: TI has discontinued the production of the device.

(2) **RoHS:** TI defines "RoHS" to mean semiconductor products that are compliant with the current EU RoHS requirements for all 10 RoHS substances, including the requirement that RoHS substance do not exceed 0.1% by weight in homogeneous materials. Where designed to be soldered at high temperatures, "RoHS" products are suitable for use in specified lead-free processes. TI may reference these types of products as "Pb-Free".
RoHS Exempt: TI defines "RoHS Exempt" to mean products that contain lead but are compliant with EU RoHS pursuant to a specific EU RoHS exemption.
Green: TI defines "Green" to mean the content of Chlorine (Cl) and Bromine (Br) based flame retardants meet JS709B low halogen requirements of <=1000ppm threshold. Antimony trioxide based flame retardants must also meet the <=1000ppm threshold requirement.

(3) MSL, Peak Temp. - The Moisture Sensitivity Level rating according to the JEDEC industry standard classifications, and peak solder temperature.

(4) There may be additional marking, which relates to the logo, the lot trace code information, or the environmental category on the device.

(5) Multiple Device Markings will be inside parentheses. Only one Device Marking contained in parentheses and separated by a "~" will appear on a device. If a line is indented then it is a continuation of the previous line and the two combined represent the entire Device Marking for that device.

(6) Lead finish/Ball material - Orderable Devices may have multiple material finish options. Finish options are separated by a vertical ruled line. Lead finish/Ball material values may wrap to two lines if the finish value exceeds the maximum column width.

Important Information and Disclaimer: The information provided on this page represents TI's knowledge and belief as of the date that it is provided. TI bases its knowledge and belief on information provided by third parties, and makes no representation or warranty as to the accuracy of such information. Efforts are underway to better integrate information from third parties. TI has taken and continues to take reasonable steps to provide representative and accurate information but may not have conducted destructive testing or chemical analysis on incoming materials and chemicals. TI and TI suppliers consider certain information to be proprietary, and thus CAS numbers and other limited information may not be available for release.

In no event shall TI's liability arising out of such information exceed the total purchase price of the TI part(s) at issue in this document sold by TI to Customer on an annual basis.

TAPE AND REEL INFORMATION

REEL DIMENSIONS

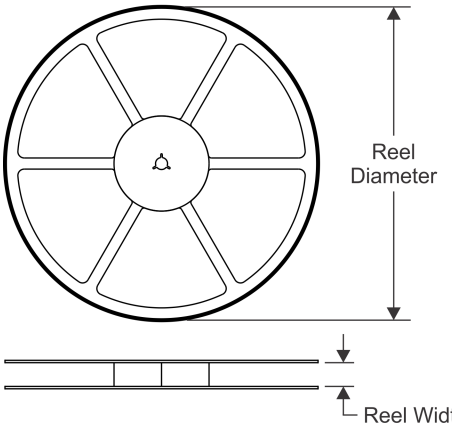

TAPE DIMENSIONS

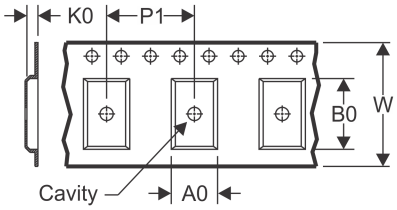

A0	Dimension designed to accommodate the component width
B0	Dimension designed to accommodate the component length
K0	Dimension designed to accommodate the component thickness
W	Overall width of the carrier tape
P1	Pitch between successive cavity centers

QUADRANT ASSIGNMENTS FOR PIN 1 ORIENTATION IN TAPE

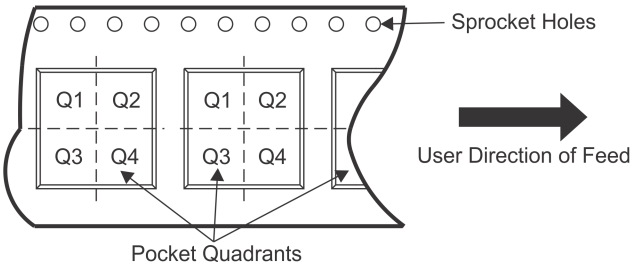

*All dimensions are nominal

Device	Package Type	Package Drawing	Pins	SPQ	Reel Diameter (mm)	Reel Width W1 (mm)	A0 (mm)	B0 (mm)	K0 (mm)	P1 (mm)	W (mm)	Pin1 Quadrant
TCAN1046DMTRQ1	VSON	DMT	14	3000	330.0	12.4	3.2	4.7	1.15	8.0	12.0	Q1
TCAN1046DMTRQ1	VSON	DMT	14	3000	330.0	12.4	3.3	4.8	1.2	8.0	12.0	Q1

TAPE AND REEL BOX DIMENSIONS

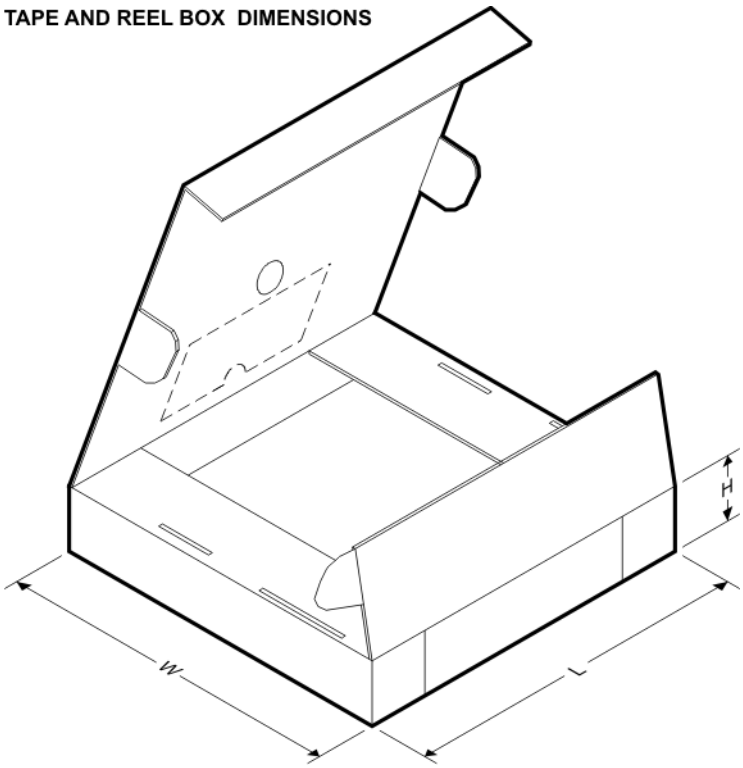

*All dimensions are nominal

Device	Package Type	Package Drawing	Pins	SPQ	Length (mm)	Width (mm)	Height (mm)
TCAN1046DMTRQ1	VSON	DMT	14	3000	367.0	367.0	38.0
TCAN1046DMTRQ1	VSON	DMT	14	3000	367.0	367.0	35.0

GENERIC PACKAGE VIEW

DMT 14

VSON - 0.9 mm max height

3 x 4.5, 0.65 mm pitch

PLASTIC SMALL OUTLINE - NO LEAD

This image is a representation of the package family, actual package may vary.
Refer to the product data sheet for package details.

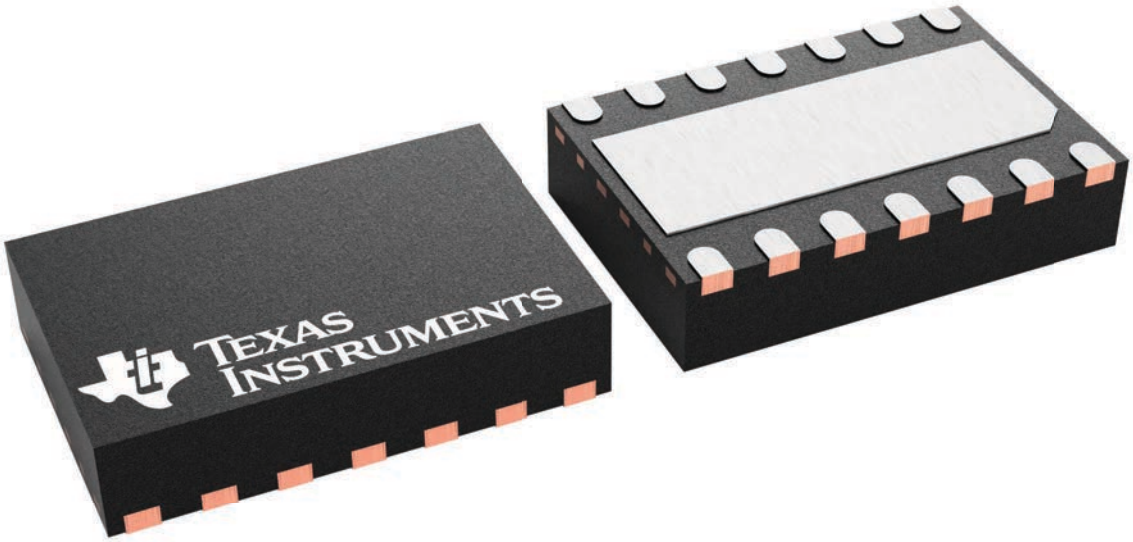

4225088/A

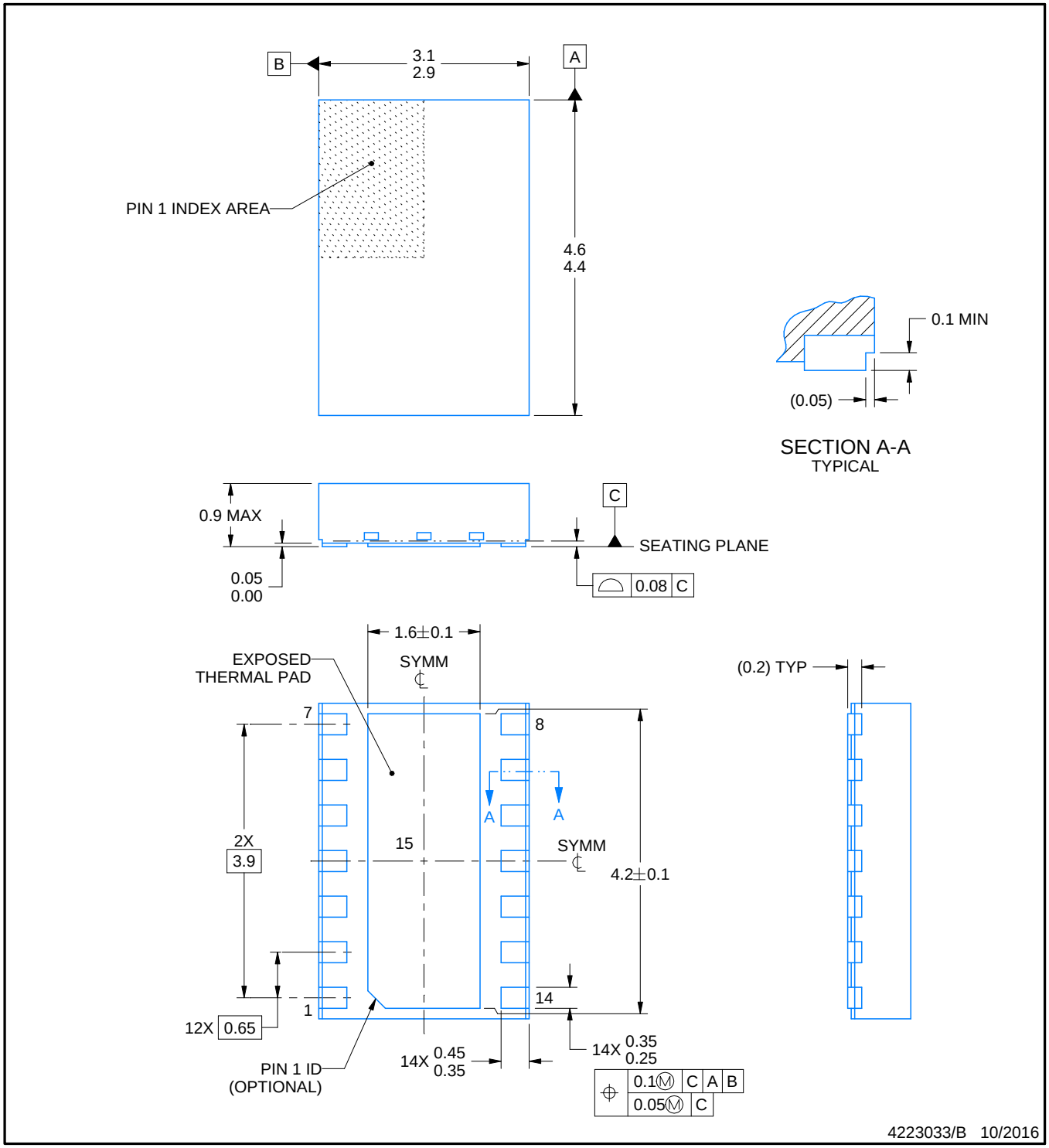

NOTES:

1. All linear dimensions are in millimeters. Any dimensions in parenthesis are for reference only. Dimensioning and tolerancing per ASME Y14.5M.
2. This drawing is subject to change without notice.
3. The package thermal pad must be soldered to the printed circuit board for thermal and mechanical performance.

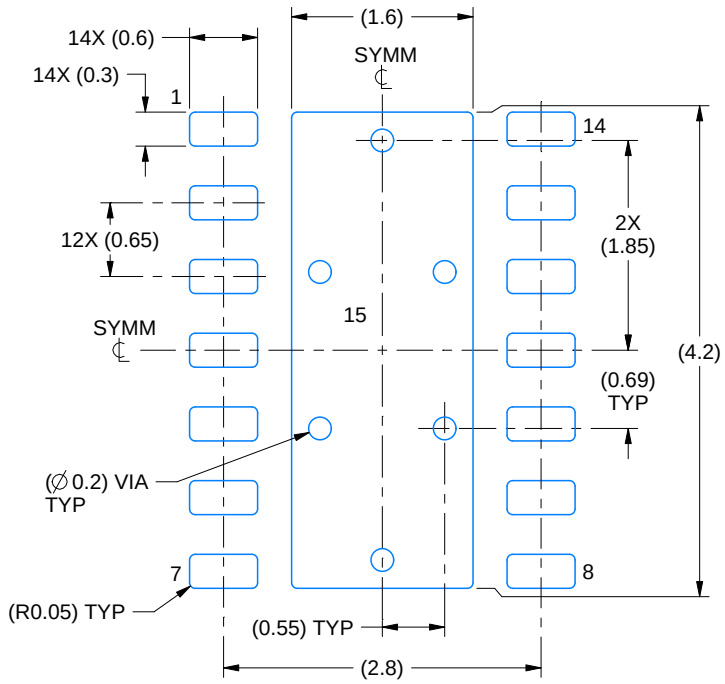

LAND PATTERN EXAMPLE
SCALE:15X

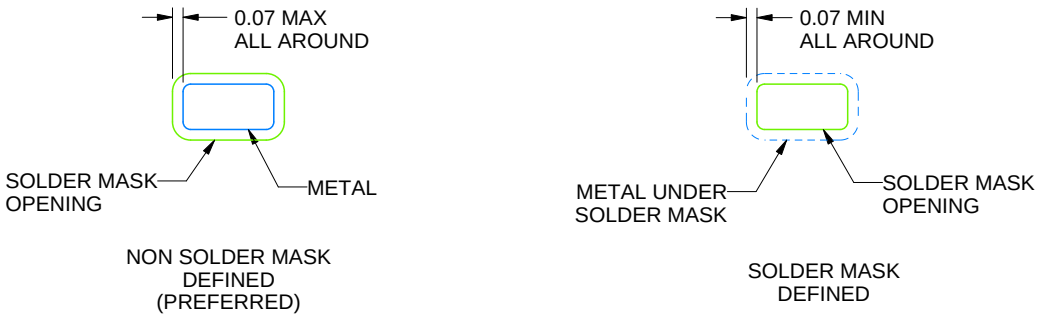

SOLDER MASK DETAILS

4223033/B 10/2016

NOTES: (continued)

4. This package is designed to be soldered to a thermal pad on the board. For more information, see Texas Instruments literature number SLUA271 (www.ti.com/lit/slua271).
5. Vias are optional depending on application, refer to device data sheet. If any vias are implemented, refer to their locations shown on this view. It is recommended that vias under paste be filled, plugged or tented.

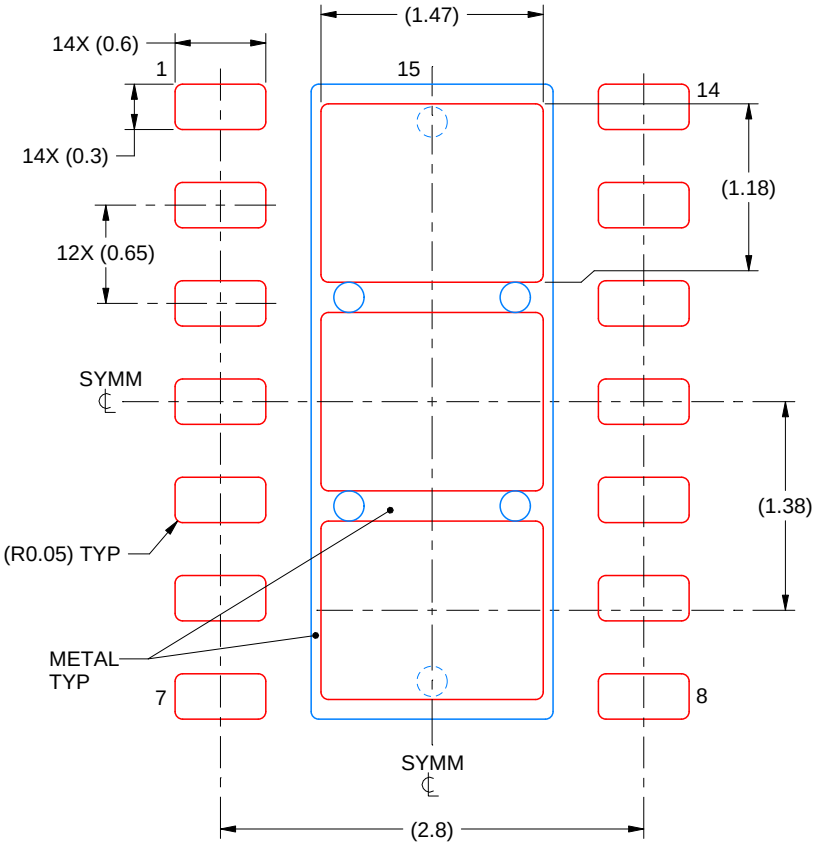

SOLDER PASTE EXAMPLE
BASED ON 0.125 mm THICK STENCIL

EXPOSED PAD 15
77.4% PRINTED SOLDER COVERAGE BY AREA
SCALE:20X

4223033/B 10/2016

NOTES: (continued)

6. Laser cutting apertures with trapezoidal walls and rounded corners may offer better paste release. IPC-7525 may have alternate design recommendations.

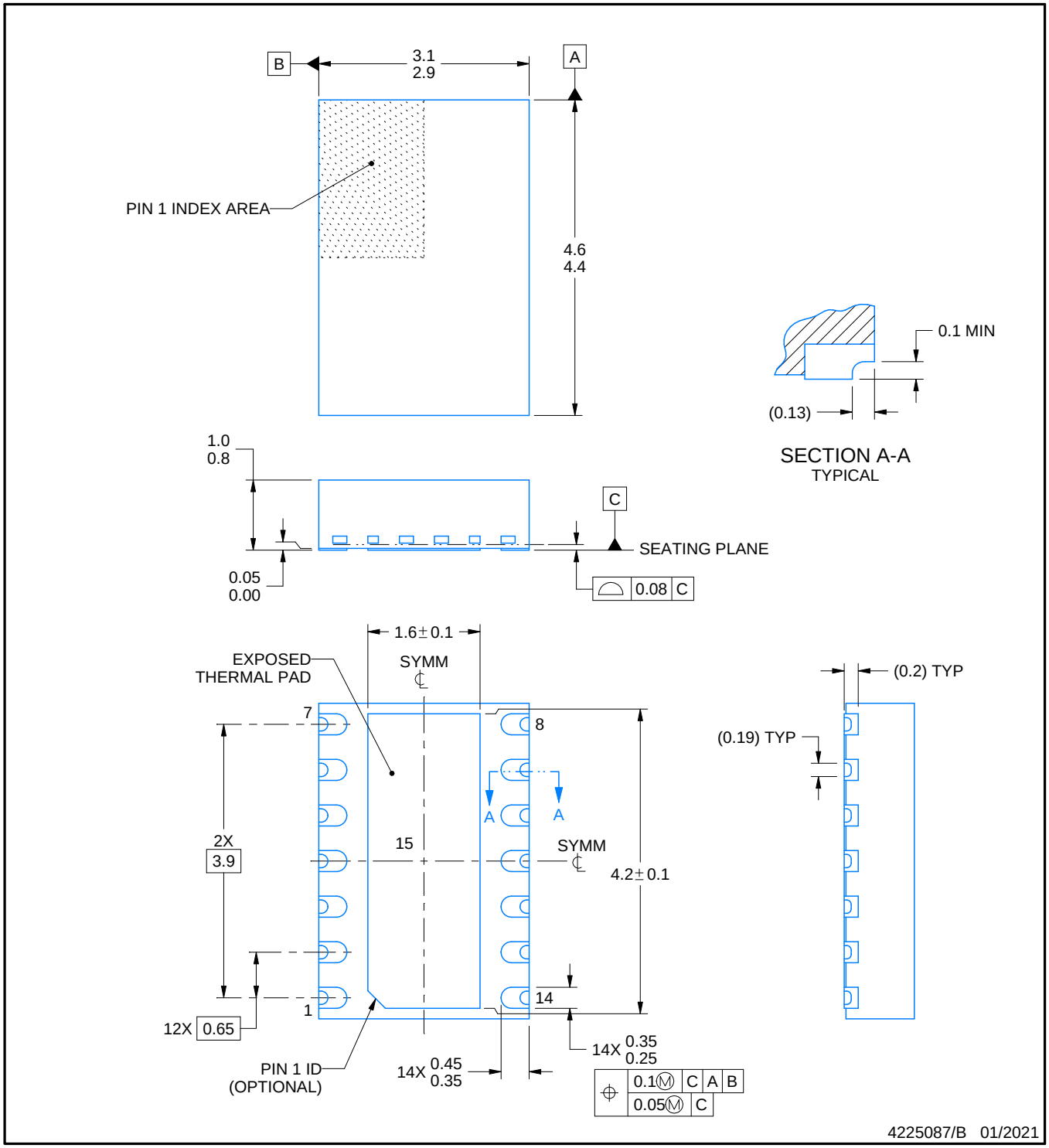

NOTES:

1. All linear dimensions are in millimeters. Any dimensions in parenthesis are for reference only. Dimensioning and tolerancing per ASME Y14.5M.
2. This drawing is subject to change without notice.
3. The package thermal pad must be soldered to the printed circuit board for thermal and mechanical performance.

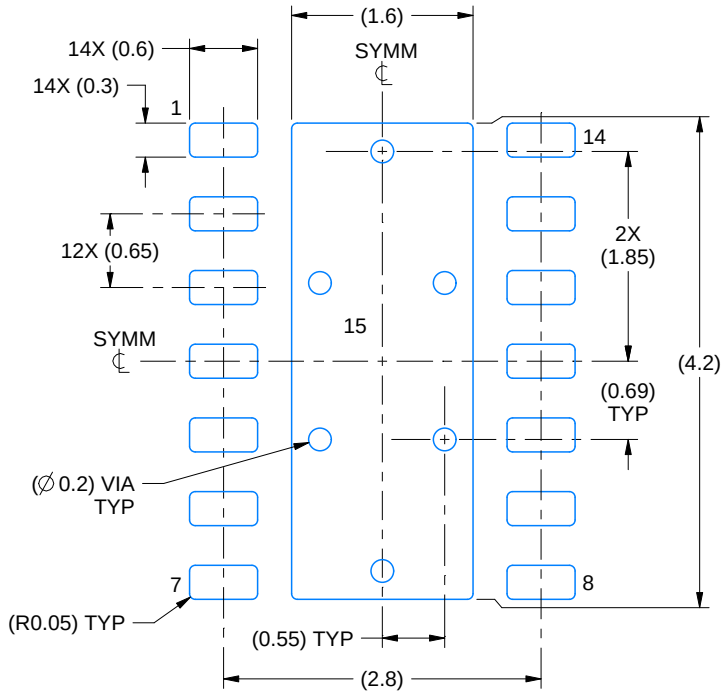

LAND PATTERN EXAMPLE
EXPOSED METAL SHOWN
SCALE:15X

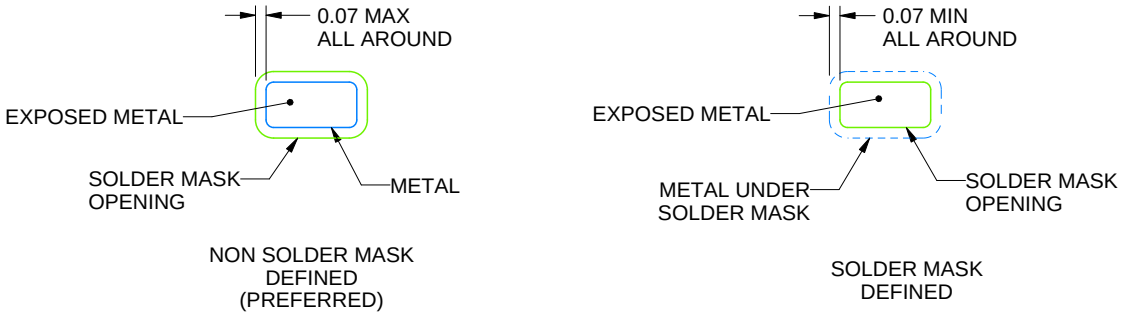

SOLDER MASK DETAILS

4225087/B 01/2021

NOTES: (continued)

4. This package is designed to be soldered to a thermal pad on the board. For more information, see Texas Instruments literature number SLUA271 (www.ti.com/lit/slua271).
5. Vias are optional depending on application, refer to device data sheet. If any vias are implemented, refer to their locations shown on this view. It is recommended that vias under paste be filled, plugged or tented.

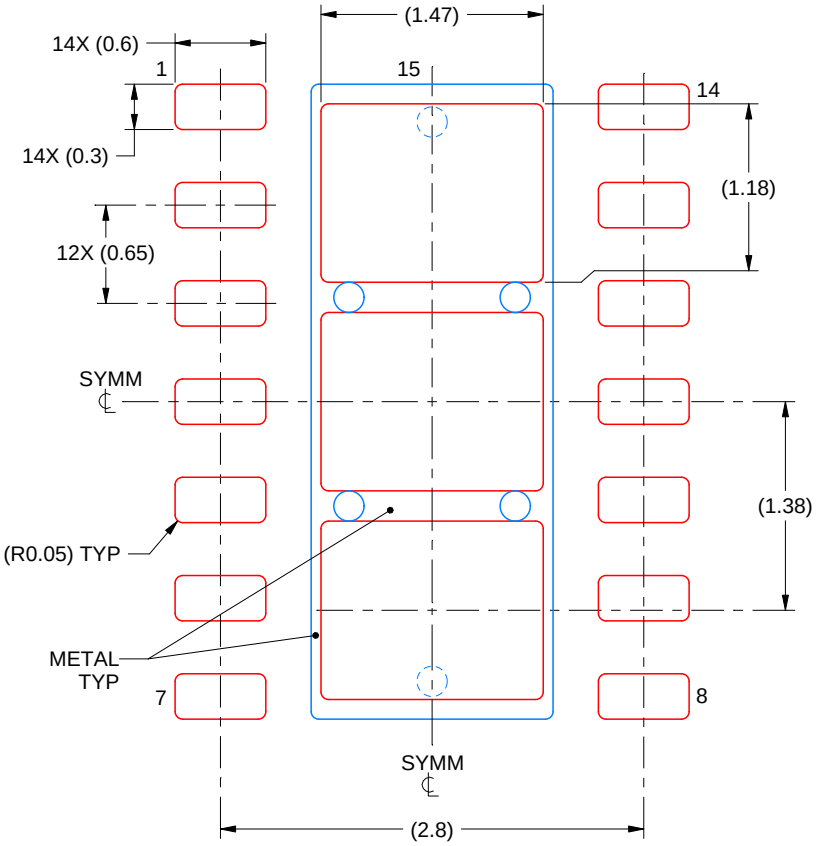

SOLDER PASTE EXAMPLE
BASED ON 0.125 mm THICK STENCIL

EXPOSED PAD 15
77.4% PRINTED SOLDER COVERAGE BY AREA
SCALE:20X

4225087/B 01/2021

NOTES: (continued)

6. Laser cutting apertures with trapezoidal walls and rounded corners may offer better paste release. IPC-7525 may have alternate design recommendations.

IMPORTANT NOTICE AND DISCLAIMER

TI PROVIDES TECHNICAL AND RELIABILITY DATA (INCLUDING DATA SHEETS), DESIGN RESOURCES (INCLUDING REFERENCE DESIGNS), APPLICATION OR OTHER DESIGN ADVICE, WEB TOOLS, SAFETY INFORMATION, AND OTHER RESOURCES “AS IS” AND WITH ALL FAULTS, AND DISCLAIMS ALL WARRANTIES, EXPRESS AND IMPLIED, INCLUDING WITHOUT LIMITATION ANY IMPLIED WARRANTIES OF MERCHANTABILITY, FITNESS FOR A PARTICULAR PURPOSE OR NON-INFRINGEMENT OF THIRD PARTY INTELLECTUAL PROPERTY RIGHTS.

These resources are intended for skilled developers designing with TI products. You are solely responsible for (1) selecting the appropriate TI products for your application, (2) designing, validating and testing your application, and (3) ensuring your application meets applicable standards, and any other safety, security, regulatory or other requirements.

These resources are subject to change without notice. TI grants you permission to use these resources only for development of an application that uses the TI products described in the resource. Other reproduction and display of these resources is prohibited. No license is granted to any other TI intellectual property right or to any third party intellectual property right. TI disclaims responsibility for, and you will fully indemnify TI and its representatives against, any claims, damages, costs, losses, and liabilities arising out of your use of these resources.

TI’s products are provided subject to TI’s Terms of Sale or other applicable terms available either on ti.com or provided in conjunction with such TI products. TI’s provision of these resources does not expand or otherwise alter TI’s applicable warranties or warranty disclaimers for TI products.

TI objects to and rejects any additional or different terms you may have proposed.

Mailing Address: Texas Instruments, Post Office Box 655303, Dallas, Texas 75265
Copyright © 2021, Texas Instruments Incorporated