low power DigiPyro™

Infrared Sensing Solutions

PYD 2592 / 7765

Product Specification

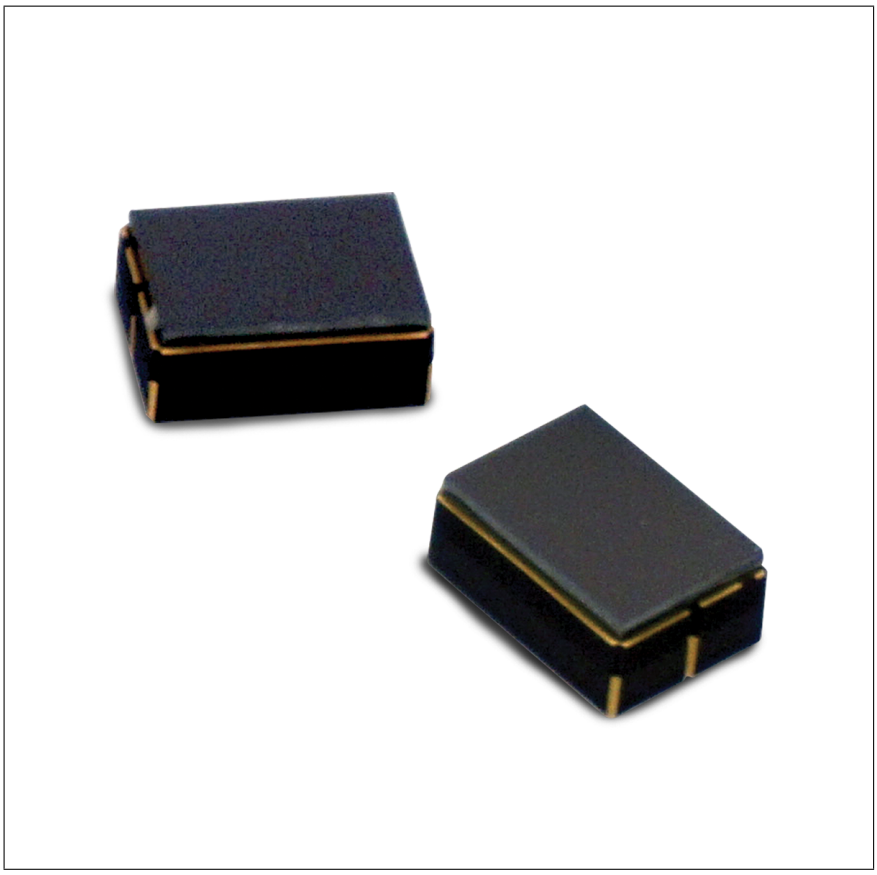

Features

- Integrated digitization
- Motion detection unit with Interrupt function
- Low-power consumption of only 3 µA at 1.8 V.
- High responsivity fully RohS compliant pyroelectric elements
- Dual detector with 2×1 mm^2 elements
- 146° field-of-view
- LCC SMD housing for re-flow soldering
- Optimal for fast designs

Applications

- Long distance motion detection (with lens)
- Energy saving applications
- Intrusion alarms
- Horizontal mounting applications
- Battery operation
- Gesture direction recognition
- Touchless switch

Low Power Dual Element SMD Pyro

The PYD 2592 is a parallel opposed format, two elements detector based on fully RohS compliant pyroelectric material. The signal is converted to a digital value using Sigma-Delta and DSP techniques. A configurable motion detection unit is implemented. Once motion was detected, an interrupt will be send to the host system. Putting the host system to sleep an overall ultra low power consumption will be achieved. All data is accessible by the host system to enable advanced signal analysis with your own detection criteria.

EXCELITAS TECHNOLOGIES®

Contents

1 Physical Characteristics **3**
- 1.1 Pyro-Electric Elements . . . 4
- 1.2 Optical Properties . . . 5
- 1.3 Filter Properties . . . 6

2 Electrical Characteristics **7**
- 2.1 Absolute Maximum Ratings . . . 7
- 2.2 Electrical Data . . . 8
- 2.3 Interface Overview . . . 9
- 2.4 Motion Detection Unit . . . 10
- 2.5 Configuration Register . . . 10
- 2.6 Serial In Interface . . . 12
- 2.7 Direct Link Interface . . . 12

3 Handling, Operation and Precautions **15**
- 3.1 Handling . . . 15
- 3.2 Operation . . . 15

4 Quality and Statements **17**

5 Packaging Specification **18**
- 5.1 General Information . . . 18
- 5.2 Carrier Tape . . . 18

1 Physical Characteristics

Table 1: Summary of physical characteristics. Parameters and data refer to an ambient temperature of 25 ± 3 °C.

Parameter	Symbol	Min	Typ	Max	Unit	Remarks/Conditions
Housing			LCC			see fig. 1
Lead Length			0		mm	see fig. 1
Field of View	FOV		146		°	see sec. 1.2
Element Size			2 × 1		mm	see fig. 1
Spacing			1		mm	see fig. 1
Optical Distance			550		µm	see fig. 1
Responsivity	R	3.0	3.7		$kV\,W^{-1}$	see sec. 1.1
Match	$(R_A - R_B)/R_A$			10	%	see sec. 1.1
Noise			30	90	μV_{pp}	see sec. 1.1
IR-Filter			Standard			see sec. 1.3

Figure 1: Dimensions and Connections. Explanations follow in this document.

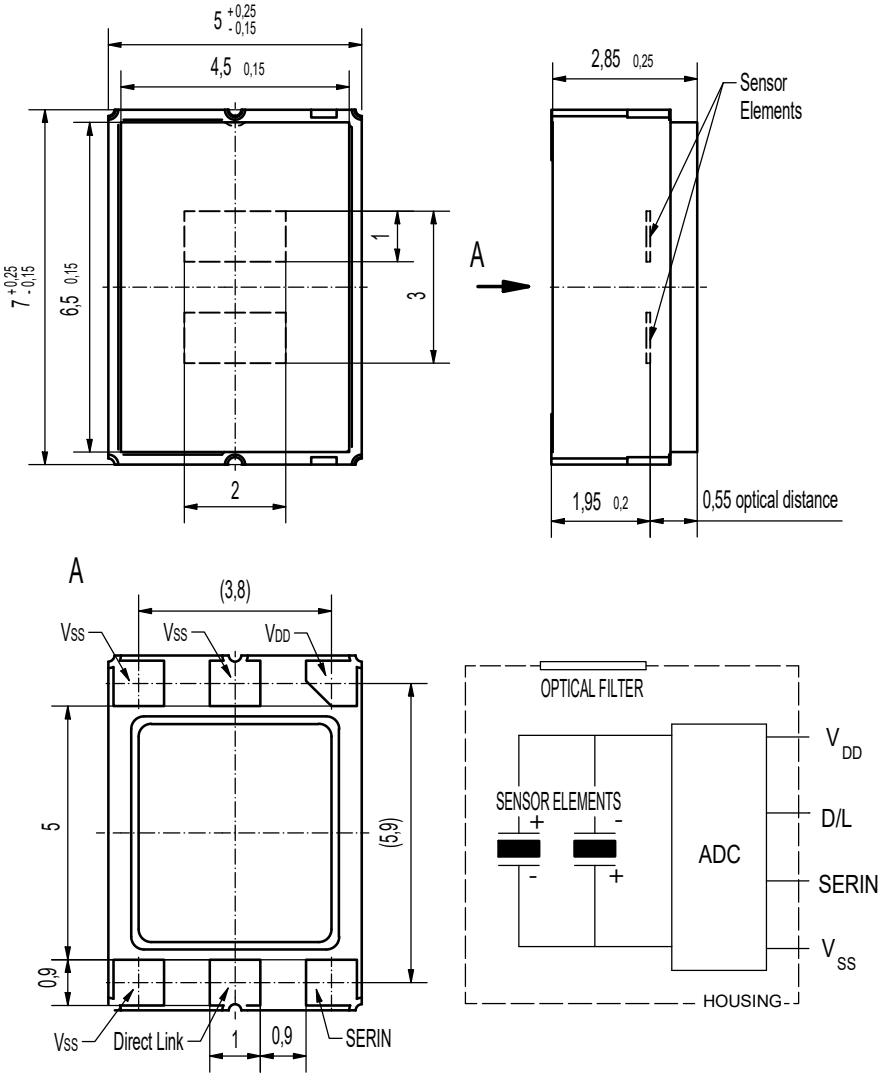

Excelitas Technologies GmbH & Co. KG
Wenzel-Jaksch-Str. 31
65199 Wiesbaden Germany
Tel.: +49 (0)611 492 430

1.1 Pyro-Electric Elements

The element configuration is shown in figure 1. It features a dual element configuration in a parallel opposed format. Its typical application is long distance, wall mounted, motion detection .

Figure 2: Test set up for the measurement of responsivity and match.

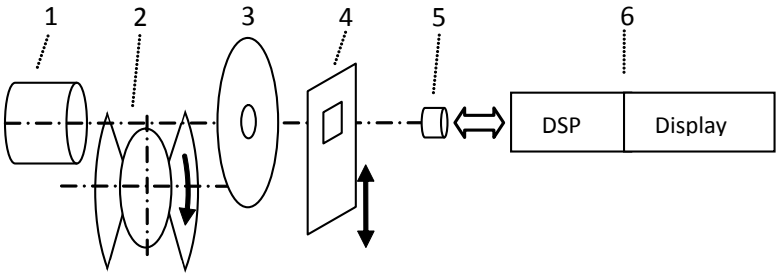

Figure 3: Masking of elements to test the electrical parameters.

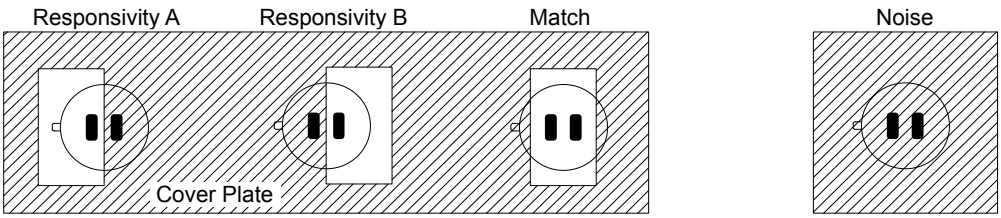

The typical set-up for the measurement of responsivity and match is illustrated in figure 2. The black body (BB) radiator (1) is set to 373 K (100 °C). The signal is modulated by a rotating chopper (2). An aperture (3) is used to adjust the radiation flux. The cover plate (4) is masking the elements as shown in figure 3. The sensor (5) is interfaced to a signal processing chain (6). To measure noise, a bandpass filter in the range of 0.4 Hz to 10 Hz is applied.
Responsivity (R) and match are measured at a modulation frequency of 1 Hz.
The match is defined by

$$\frac{\text{Match}}{R} \times 100 \tag{1}$$

Noise is measured shut from infra-red energy. The measurement is performed after a settling time of 10 min at an ambient temperature of 25 °C ± 3 °C. Noise is monitored for the duration of 600 s .

Excelitas Technologies GmbH & Co. KG
Wenzel-Jaksch-Str. 31
65199 Wiesbaden Germany
Tel.: +49 (0)611 492 430

1.2 Optical Properties

Figure 4: Illustration for the definition of the horizontal field of view (FOV).

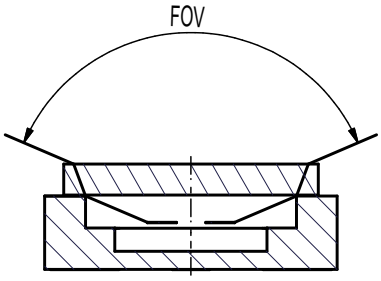

The horizontal field of view (FOV) as drawn to figure 4 is given as the geometrically unobstructed light path to both elements. The FOV of 146° is given for the optical light acceptance with the full so-called common mode suppression.
The optical distance as it is given in figure 1 represents the effective focal plane for the application specific optics. The optical distance is shorter than the geometrical due to refraction of light in the filter.

Excelitas Technologies GmbH & Co. KG
Wenzel-Jaksch-Str. 31
65199 Wiesbaden Germany
Tel.: +49 (0)611 492 430

1.3 Filter Properties

Table 2: Filter properties

Parameter	Symbol	Min	Typ	Max	Unit	Remarks/Conditions
Average Filter Transmittance	T_A	77			%	$7.5\,\mu m < \lambda < 13.5\,\mu m$
Average Filter Transmittance	T_A			0.5	%	$\lambda < 5\,\mu m$
Cut-on Wavelength	$\lambda(5\,\%)$	5.2	5.5	5.8	µm	at 25 °C

Figure 5: Filter transmittance, typical curve

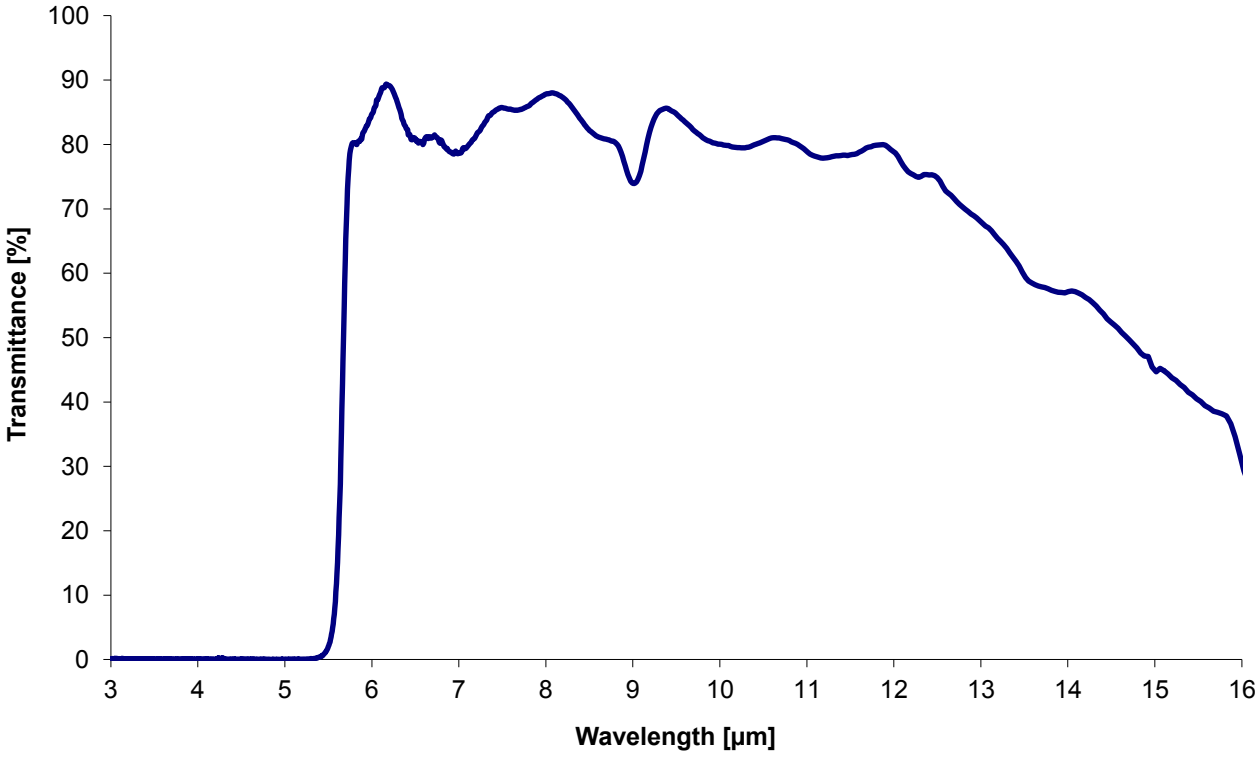

Excelitas Technologies GmbH & Co. KG
Wenzel-Jaksch-Str. 31
65199 Wiesbaden Germany
Tel.: +49 (0)611 492 430

2 Electrical Characteristics

2.1 Absolute Maximum Ratings

Table 3: Absolute Maxiumum Ratings. Data applicable to operation at free-air temperature range.

Parameter	Symbol	Min	Typ	Max	Unit	Remarks/Conditions
Voltage at any pin	V_{DD},$V_{Serial\ In}$,$V_{Direct\ Link}$	−0.3		3.6	V	
Current into any pin	I_{pin}	−100		100	mA	
Storage Temperature		−40		85	°C	< 60 % r.H.
Operating Temperature		−40		70	°C	

Stresses beyond the limits listed in table 3 may cause permanent damage to the device. Exposure to absolute maximum ratings for long time may affect the device reliability and may lead to deterioration of any parameter.

Excelitas Technologies GmbH & Co. KG
Wenzel-Jaksch-Str. 31
65199 Wiesbaden Germany
Tel.: +49 (0)611 492 430

2.2 Electrical Data

Table 4: Electrical Data. Unless specified differently all data refers to 25 ± 3 °C.

Parameter	Symbol	Min	Typ	Max	Unit	Remarks/Conditions
Operating Voltage	V_{DD}	1.8	3	3.6	V	
Supply Current	I_{DD}		3	3.5	µA	V_{DD} =1.8 V, no load
SERIN						
Input Low Voltage	V_{SIL}	−0.3		$0.2V_{DD}$	V	
Input High Voltage	V_{SIH}	$0.8V_{DD}$		V_{DD} + 0.3	V	Max V<3.6 V
Input Current	I_{SI}	−1		1	µA	V_{SS} <V_{IN} <V_{DD}
Data Clock Low Time	t_{SL}	200		2000	ns	
Data Clock High Time	t_{SH}	200		2000	ns	
Data In Hold Time	t_{SHD}	80		150	µs	
Data Load Time	t_{SLT}	650			µs	
Direct Link						
Input Low Voltage	V_{DIL}	−0.3		$0.2V_{DD}$	V	
Input High Voltage	V_{DIH}	$0.8V_{DD}$		V_{DD} + 0.3	V	Max V<3.6 V
Input Current[2]	I_{DI}	−1		1	µA	
Data Set-up Time	t_{DS}	120		150	µs	
Data Clock Low Time	t_{DL}	200		2000	ns	
Data Clock High Time	t_{DH}	200		2000	ns	
Data Bit Settling Time	t_{BS}			2	µs	C_{LOAD} <10 pF
Sample Time	t_{SMPL}	2.0		12.5[1]	ms	
Bit Time	t_{BIT}			22	µs	
Readout Abortion Time	t_{RA}	160			µs	
Update Time	t_{UP}	1250			µs	
ADC Resolution[3]			14		Bits	
PIR ADC Sensitivity			6.5		µV/Count	
PIR ADC Offset		7000	8000	9000	Counts	in stable condition
Sensitivity of T_{AMB}			80		Counts/K	14 bits ADC resolution
Counts at 300 K (27 °C)		6620	8200	9980	Counts	
LPF cut-off frequency	f_1		7		Hz	
HPF cut-off frequency	f_2		0.2/0.4		Hz	configurable
Internal Clock Frequency	f_{CLK}	28	32	40	kHz	

[1] Maximum limits only applicable in "Interrupt Read Out Mode".
[2] Pull Up/Down resistors at Direct Link are not applicable.
[3] Effective ADC range is from 511 counts to 2^{14} − 511 counts .

Excelitas Technologies GmbH & Co. KG
Wenzel-Jaksch-Str. 31
65199 Wiesbaden Germany
Tel.: +49 (0)611 492 430

2.3 Interface Overview

The following sections provide a coarse overview and specify the interface properties. For a deeper discussion of implementation and application related topics, refer to the corresponding application note of this sensor family.

Figure 6: Block Diagram

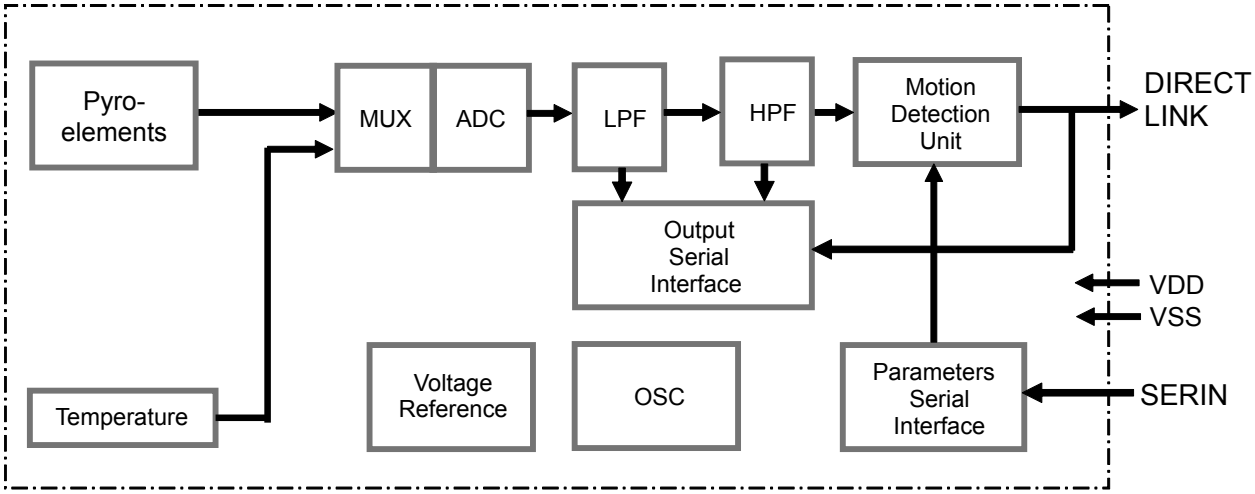

The pyro-electric sensing elements are connected to a built-in IC, whose functions are shown in the block diagram 6. The low power DigiPyro^{TM} contains pyro-electric elements sensitive to IR radiation and an ASIC for the digital signal processing within the sensor package. The ASIC includes an on-chip oscillator, a voltage reference, an analogue-to-digital (ADC) converter with multiplexed inputs (MUX) for the pyro-electric elements as well as for the internal temperature sensor.
Included are also Low- and High-Pass Filters and a Motion Detection Unit. The serial interface “SERIN” is provided to configure the internal registers. The configuration memory is volatile which means that after power up the register settings are undefined.
A second serial interface called “DIRECT LINK” can be configured to:

1. Send an interrupt once a motion event is detected.
2. Read a continuous data stream from the detector.

Excelitas Technologies GmbH & Co. KG
Wenzel-Jaksch-Str. 31
65199 Wiesbaden Germany
Tel.: +49 (0)611 492 430

2.4 Motion Detection Unit

Figure 7: Example for the detection of motion after BPF.

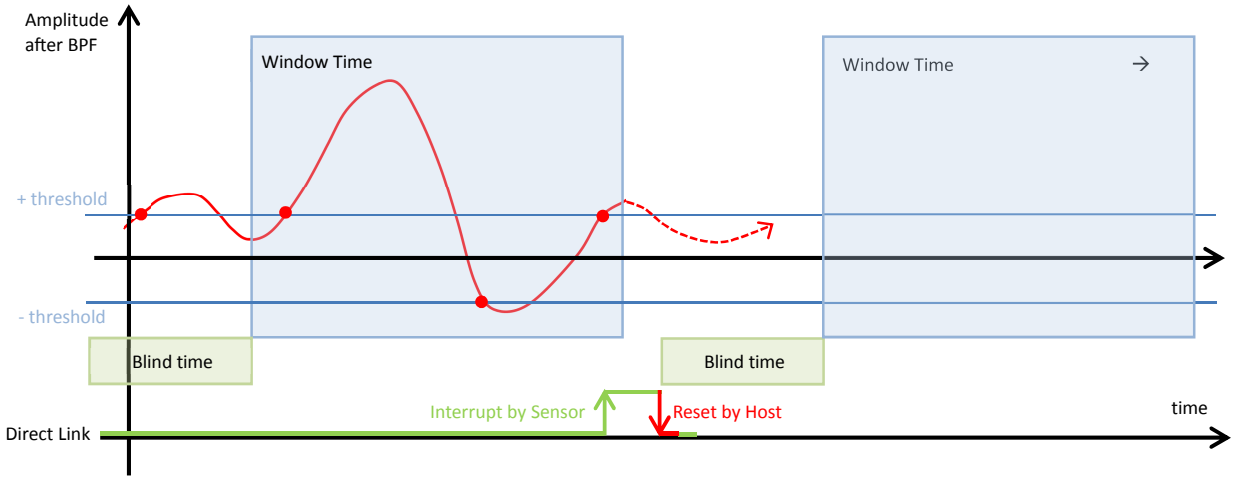

Figure 7 illustrates the processing of the pyroelectric sensor signal. The signal is always analysed after band pass filtering (BPF).
To enable the internal Motion Detection Unit configure the sensor to "Wake Up" mode (see section 2.5). The DIRECT LINK will be pulled HIGH when the motion criteria are met. DIRECT LINK will not automatically fall back to LOW. To clear the interrupt, DIRECT LINK needs to be pulled to LOW by the micro-controller for at least 160 µs. When the alarm event is cleared by resetting the interrupt, any further motion detection is stopped for the programmed blind time.
For details please refer to the corresponding technical note.

2.5 Configuration Register

Table 5: Configuration Register Content. Register Contents are undefined after Power-Up.

Bit#	Description	Size[bit]	Remarks
[24:17]	Threshold	8	Detection threshold on BPF value
[16:13]	Blind Time	4	= 0.5 s + [Reg Val] · 0.5 s
[12:11]	Pulse Counter	2	= 1 + [Reg Val]
[10:9]	Window Time	2	= 2 s + [Reg Val] · 2 s
[8:7]	Operation Modes	2	0: Forced Readout 1: Interrupt Readout 2: Wake Up 3: Reserved
[6:5]	Signal Source	2	0: PIR (BPF) 1: PIR (LPF) 2: Reserved 3: Temperature Sensor
[4:3]	Reserved	2	Reserved: Must be set to dec 2
[2]	HPF Cut-Off	1	0: 0.4 Hz 1: 0.2 Hz
[1]	Reserved	1	Reserved: Must be set to dec 0
[0]	Count Mode	1	count with (0) or without (1) BPF sign change

Threshold The pyroelectric signal must exceed that threshold after band-pass filtering in order to be recognized by the pulse counter. The threshold applies to positive as well as negative pulses by the pyroelectric element. The threshold must be configured to a value which meets the application's requirements.

Excelitas Technologies GmbH & Co. KG
Wenzel-Jaksch-Str. 31
65199 Wiesbaden Germany
Tel.: +49 (0)611 492 430

Blind Time The purpose of blind time is to avoid immediate re-triggering after a motion event was detected and an interrupt was signalized. The blind time starts counting after pulling the "DIRECT LINK" line from high to low by the host system. The time can be selected between 0.5 s and 8 s in steps of 0.5 s.

Pulse Counter The amount of pulses above the threshold is counted in a specified window time. It triggers the alarm event (DIRECT LINK is pushed by the ASIC from low to high) in wake up operation mode. It can be configured from 1 up to 4 pulses. The amount of pulses is application specific.

Window Time The pulse counter is evaluated for pulses above the threshold within a given moving window time. The window time can be set from 2 s up to 8 s in intervals of 2 s. The best setting depends on the application specific motion pattern.

Operation Modes Three operation modes can be selected with this 2 bit wide register value:

- dec 0: "Forced Readout" mode
- dec 1: "Interrupt Readout" mode
- dec 2: "Wake Up" operation mode
- dec 3: Reserved

In "Forced" and "Interrupt Readout" mode the "DIRECT LINK" interface is used to read raw data and configuration settings. The source is defined by the filter source setting. Please refer to section 2.7 for communication details.
In wake up operation mode, the internal alarm event unit is used to generate a low to high transition on the "DIRECT LINK" line once the criteria for motion was met. The host system must pull this line from high to low in order to reset the alarm unit.

Signal Source The source of the ADC output can be set to

- dec 0: PIR BPF
- dec 1: PIR LPF
- dec 2: Reserved
- dec 3: Temperature sensor

The signal of the pyroelectric sensor can be observed after low-pass filtering (LPF). The data on the "DIRECT LINK" line will be an unsigned integer in the range of 0 counts to 16 383 counts.
After band pass filtering (BPF) the data will be a signed integer in the range of −8192 counts to 8191 counts.
If the source is set to the internal temperature sensor, an unsigned integer in the range of 0 counts to 16 383 counts will be provided which is proportional to the internal temperature of the sensor. This can be used to ignore false triggers due to difficult conditions such as sudden temperature changes above 1 K min^{-1}.

HPF cut-off The high pass cut-off frequency in the band pass filter can be selected to be

- dec 0: 0.4 Hz
- dec 1: 0.2 Hz

The optimal value depends on the motion pattern and is application specific. Generally speaking the lower cut-off value is used for long distance motion detection.

Count Mode If the mode is set to 0, pulses above the threshold are only counted when the sign of the signal changed after BPF. If set to 1, no zero crossing is required.

Excelitas Technologies GmbH & Co. KG
Wenzel-Jaksch-Str. 31
65199 Wiesbaden Germany
Tel.: +49 (0)611 492 430

2.6 Serial In Interface

Figure 8: Serial Data clocked into Device

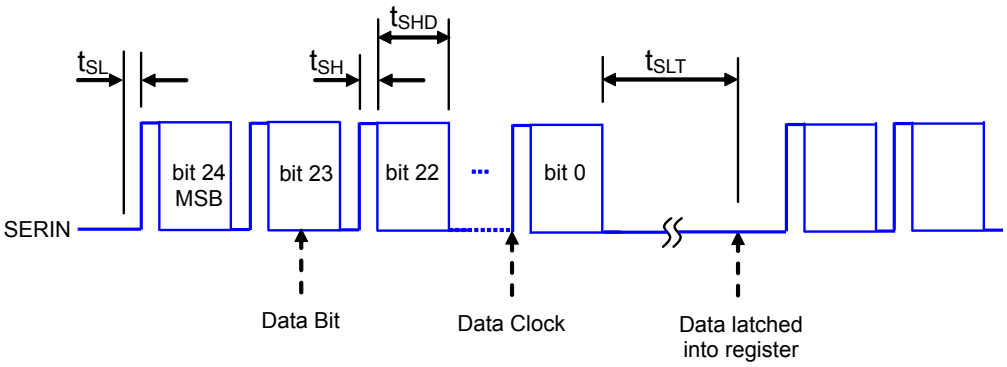

The configuration data is set via the serial input "SERIN" as illustrated in figure 8. During configuration the DIRECT LINK line must be kept LOW by the host system.
The external micro-controller has to generate a LOW to HIGH transition on the SERIN input and subsequently apply the data bit value (LOW or HIGH).
The LOW and HIGH time (t_{SL} and t_{SH}) for the transition can be very short (1 instruction cycle of the micro-controller). The data bit value must be applied for at least t_{SHD} >= 80 µs .
Whenever the device has received 25 data bits and the transfer of data bits is interrupted for a period greater than t_{SLT} >650 µs , the last data received is latched into the configuration register. The transmission of a 25 bit data word should not be interrupted for more than 150 µs, as the device may latch the data already at this stage. New data is soonest accepted when SERIN has been LOW for at least t_{SLT} >650 µs and the supply voltage is within the specified operating range after Power-Up.
The configuration data is soonest available for read back 2.4 ms after t_{SLT} elapsed. To read back the sensor's configuration, the DIRECT LINK interface is used.

2.7 Direct Link Interface

The DIRECT LINK interface is a bi-directional one wire serial interface which is used to generate an interrupt or to continuously retrieve data from the sensor.

Table 6: Content of the DIRECT LINK data stream when reading sensor out.

Bit#	Description	Size[bit]	Remarks
[39]	Out of Range	1	0: PIR was reset 1: Normal operation
[38:25]	ADC counts	14	Value of selected source
[24:0]	Configuration	25	Register settings

Out of Range The ASIC features an out of range detection. Should the pyroelectric sensor's signal drop below 511 counts or exceed $2^{14} - 511$ counts before band-pass filtering, the input will be shorted for a duration of about 16 ms in order to discharge the sensor. This is indicated by a 0. A normal operation is indicated with a 1. The bit state remains 0 until the first data packet after the shorting operation is read out.
Out of range conditions may occur for example during strong sensor temperature gradients of more than 1 K min^{-1}.

ADC counts The data represents either ADC counts after low-pass filtering, after band-pass filtering or the reference temperature counts. The band-pass filtered data is represented as a two's complement 14 bit signed

Excelitas Technologies GmbH & Co. KG
Wenzel-Jaksch-Str. 31
65199 Wiesbaden Germany
Tel.: +49 (0)611 492 430

integer value. The low-pass data and the reference temperature data is represented as 14 bit unsigned integer. Band-pass filtered data is updated lastest every 20 ms after the last reading. Reading this value out with a faster sampling time may lead to duplicated readings.

Configuration The settings of the alarm event unit is contained here. Details are described in section 2.5.

Figure 9: Data Transmission Diagram

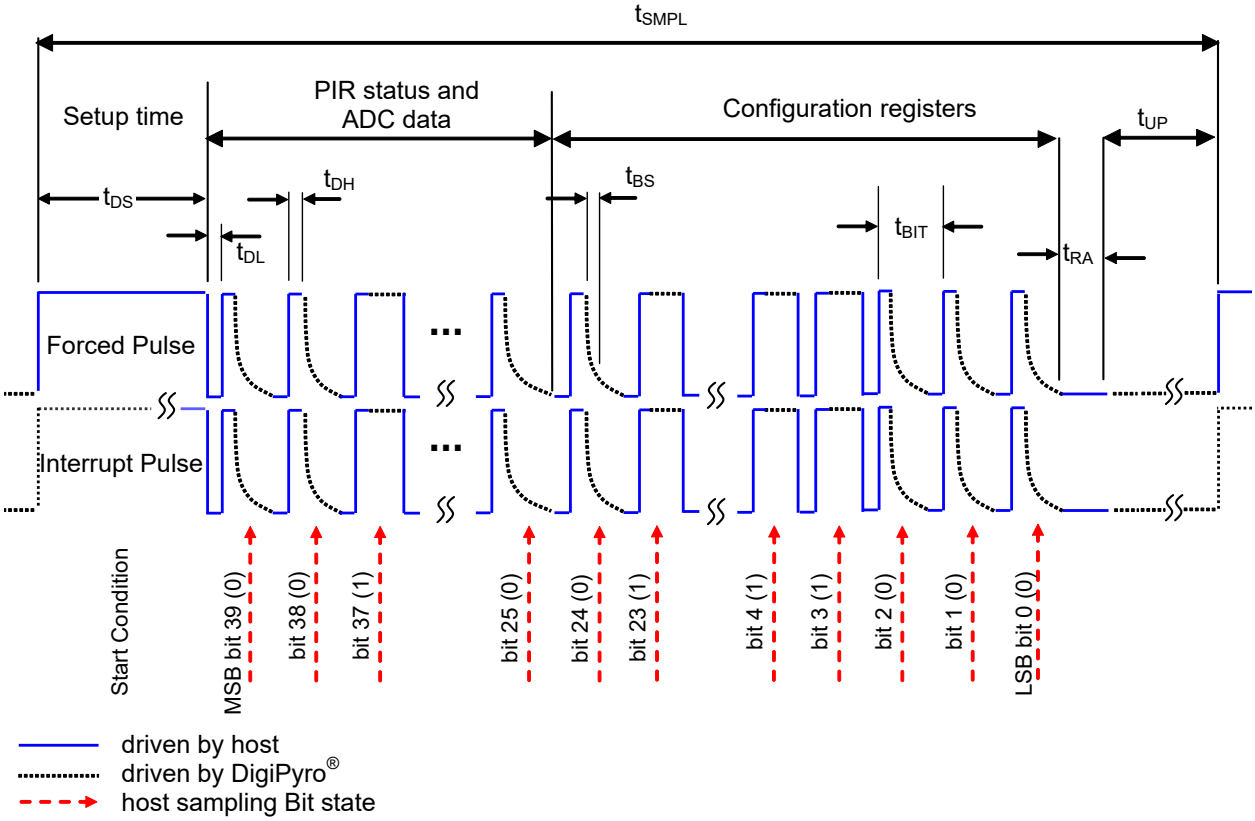

Timing The DIRECT LINK interface communication principle is sketched in figure 9. It can be divided into the start condition and the data stream after it.
The start condition for any communication is indicated by a LOW to HIGH transition of the DIRECT LINK line. That condition can be initiated either by the host system or the sensor. Initiating the condition with the host system is called "Forced Readout" mode. Initiating the condition with the sensor is called "Interrupt (driven) Readout" mode. Whether the sensor or the host is driving the start condition must be set in the sensor's configuration of "Operation Mode" (see sec. 2.5).

Wake up Mode The source for the Interrupt is the sensor's Motion Detection Unit. Once motion was detected (see sec. 2.4) the sensor will pull the line from LOW to HIGH. The DIRECT LINK line will not automatically fall back to LOW. To reset the Motion Detection Unit, the host system must pull the line LOW for at least 160 µs. The host system can (but does not have to) proceed to the **Readout of Bits** not sooner than 120 µs after the Interrupt occurred and the DIRECT LINK was HIGH.
In order to recognize the interrupt by the sensor, the host system's connection to the DIRECT LINK line must have a high impedance (high Z) and be set to input.

Excelitas Technologies GmbH & Co. KG
Wenzel-Jaksch-Str. 31
65199 Wiesbaden Germany
Tel.: +49 (0)611 492 430

Forced Readout The sensor is expecting the host system to initiate the communication. Forcing DIRECT LINK to HIGH for at least t_{DS} = 120 µs and then pulling it to LOW will start the communication. The host system can resume with the **Readout of Bits**.

Interrupt Readout The sensor will drive the line typically every t_{SMPL} = 16 ms HIGH. The host system must then pull the line to LOW in order to start the communication with the sensor. The host system can proceed to the **Readout of Bits** not sooner than 120 µs after the Interrupt occurred and the DIRECT LINK was HIGH.
In order to recognize the interrupt by the sensor, the host system's connection to the DIRECT LINK line must have a high impedance (high Z) and be set to input.
The recommended readout mode is the "Forced Readout".

Readout of Bits The readout procedure is started by the forced or interrupt pulse. The low power DigiPyro™ waits for the next LOW to HIGH transition by the host system. The host system pulls the line HIGH and releases it (high impedance Z). The low power DigiPyro™ will pull the line LOW for a 0 bit state or keep it HIGH for a 1 bit state.
The time t_{BS} which the signal needs to settle to a LOW level depends on the capacitive load (e.g. PCB design) at the DIRECT LINK pin. Hence, it is recommended to start implementing the interface with t_{BIT} close to, but shorter than 22 µs to ensure proper LOW level settling. In next steps reduce t_{BIT} empirically to optimize for reliable data transmission at maximum transmission speed.
After reading the line state by the host system, the host pulls the line again LOW to initiate the next bit readout by a LOW to HIGH transition again. The sequence will be repeated until all bits are shifted out. After the last bit of bit[0] the host controller must force DIRECT LINK pin to LOW for at least 160 µs and subsequently release DIRECT LINK (High Z).
It has to be considered that t_{BIT} must not exceed 22 µs to avoid data corruption. Under no circumstances DIRECT LINK may be at LOW level for longer than 22 µs . It is recommended that the total time to readout one data packet should not exceed 800 µs to ensure always latest values. In "Interrupt Mode" the total readout procedure must not exceed t_{SMPL} < 12.5 ms.
It is allowed to cancel the readout at any position of the data stream. To terminate the readout, DIRECT LINK must be forced to LOW level for at least 160 µs and subsequently released to input (High Z).
In order to reduce settling effects, the data packets have to be read continuously with equal sampling intervals.

Excelitas Technologies GmbH & Co. KG
Wenzel-Jaksch-Str. 31
65199 Wiesbaden Germany
Tel.: +49 (0)611 492 430

3 Handling, Operation and Precautions

3.1 Handling

Shelf Life The product can be stored for 12 months before usage at −10 °C to 40 °C (<60 % r.H. at 40 °C non condensing).

Storage This device has a moisture sensitivity level of 3 according to IPC/JEDEC J-STD-20E. After opening moisture barrier bags, the humidity indicator card must be checked to be below 10 % when read at 23 °C ± 5 °C. After opening the bag, parts may be stored at relative humidities below 10 %. Parts should be processed within less than 48 hours if moisture conditions are below 30 °C/60 % relative humidity. If conditions specified above are not met, parts must be baked for a minimum of 8 hours at 125 °C prior to use.

ESD The ASIC was designed to withstand a discharge of up to 1.6 kV through a 1.5 kΩ resistor in series according to the test method MIL-STD-883D / 3015.
Handle the detectors as ESD sensitive devices and protect them from electrostatic discharges. Working areas should be conductive and grounded. When handling detectors, operators shall be grounded.

Mechanical Avoid mechanical stress on the housing and especially on the filter. Do not drop detectors on the floor.

Cleanliness Avoid touching the detector window. To clean windows, use only ethyl alcohol with a cotton swab when necessary. Do not expose detectors to aggressive detergents such as Freon, trichloroethylene, etc.

Footprint A proposal for a pad design is shown in drawing 10.

Figure 10: Proposal for pad dimensions in [mm]

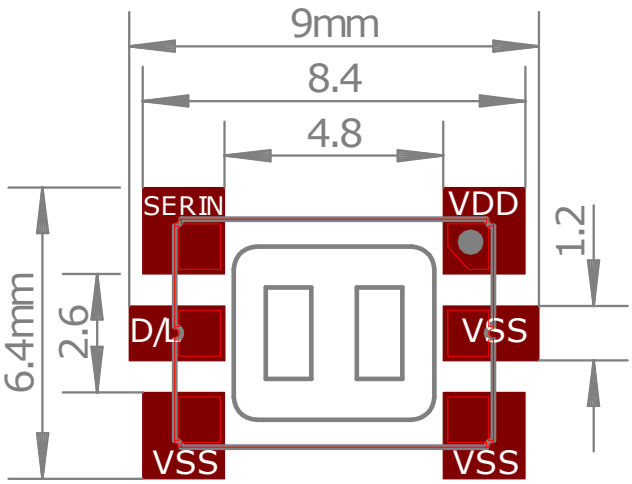

Soldering Conditions The SMD package allows for automated pick-and-place procedures combined with a lead-free automated re-flow soldering process. A typical lead-free soldering profile is shown in the graph 11.

3.2 Operation

Humidity The operation below the dew point may affect the performance.

Excelitas Technologies GmbH & Co. KG
Wenzel-Jaksch-Str. 31
65199 Wiesbaden Germany
Tel.: +49 (0)611 492 430

Figure 11: Typical lead free soldering profile.

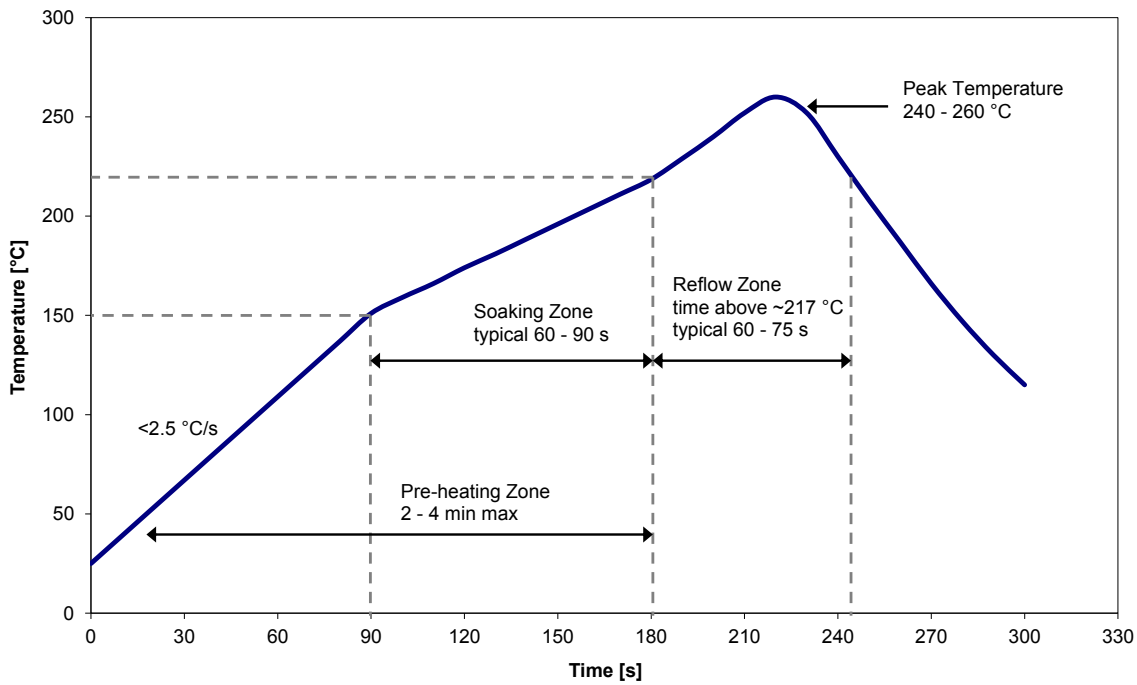

Temperature Strong temperature gradients above 1 K min^{-1} may affect the sensor's performance. Before taking a reading, during testing, and / or operation the unit has to become thermally stable (due to its nature as a thermal detector and the high sensitivity of the device).
All data is specified at room temperature. When operating at other temperatures within the specified operating range, parameters may vary. The detectors might operate outside the quoted range but may have degraded performance.

Excelitas Technologies GmbH & Co. KG
Wenzel-Jaksch-Str. 31
65199 Wiesbaden Germany
Tel.: +49 (0)611 492 430

4 Quality and Statements

Quality Excelitas Technologies is a ISO 9001:2015 certified manufacturer with established SPC and TQM. Detector out-going inspections include the parameters responsivity, match, offset, noise, gross leak. Due to high level mass production, individual data is not stored.
Excelitas Technologies is certified for it's Environmental Management System according to ISO 14001:2015 and for the Occupational Safety and Health Management System according to ISO 45001:2018.
All devices employing PCB assemblies are manufactured according IPC-A-610 class 2 guidelines.
The infra-red detection product line is certified for ANSI/ESD S.20.20:2014.

Package This IR-detector is sealed to pass a He-leakage test with maximum leak rate of 1×10^{-8} mbar l s^{-1}.
This device has a moisture sensitivity level of 3 according to IPC/JEDEC J-STD-20E.

Safety Modern high-tech materials are applied in the production of our pyro-electric detectors. Some of these materials are sensitive to high temperature exposure or to specific forms of stress. Our parts are compliant with environmental regulations such as RoHS 2011/65/EU. For details please contact our local representatives. We recommend to always check your local regulations. Disposal shall only be carried out in accordance with the latest legislation and directives. In Europe, WEEE directives must be followed.

Liability Policy The contents of this document are subject to change. The details of this document are valid by the specified revision date. Excelitas reserves the right to change at any time total or part of the content of this specifications without individual notification. Customers should consult with Excelitas Technologies' representatives to ensure updated specifications before ordering.
Customers considering the use of Excelitas Technologies devices in applications where failure may cause personal injury or property damage, or where extremely high levels of reliability are demanded, are requested to discuss their concerns with Excelitas Technologies representatives before such use.
The Company's responsibility for damages will be limited to the repair or replacement of defective product. As with any semiconductor device, thermopile sensors or modules have a certain inherent rate of failure. To protect against injury, damage or loss from such failures, customers are advised to incorporate appropriate safety design measures into their product.

Excelitas Technologies GmbH & Co. KG
Wenzel-Jaksch-Str. 31
65199 Wiesbaden Germany
Tel.: +49 (0)611 492 430

5 Packaging Specification

5.1 General Information

The Excelitas Technologies Tape and Reel packing system protects the product from mechanical and electrical damage and is designed for automatic pick-and-place equipment.
The Tape and Reel packing system consists of a Carrier Tape sealed with a protective Cover Tape to hold the devices in place. The devices are loaded with leads down, into the carrier pockets. The tape is wound onto a plastic reel and the loose end of the carrier tape is kept in place by an additional protective band. The protective band also acts as an reinforcement of the plastic reel to avoid deformation after vacuuming. The conductive carrier tape, and antistatic coated transparent cover tape and reel provide ESD protection.
Information labels, ESD labels and bar-code labels (optional), desiccant, humidity indicator card, all are placed on each reel. Single reel of components are inserted into moisture barrier bag and then vacuumed, regardless of the specified MSL level. Additional Information labels are pasted on the vacuumed moisture barrier bags, which is then wrapped in bubble foil and then placed into boxes before shipping.
Excelitas Technologies' tape and reel specifications are in conformance with the EIA Standard 481 "Taping of Surface-Mount Components for Automatic Placement."

5.2 Carrier Tape

Figure 12 shows the basic outline and dimension labels of the carrier tape. Typically, the carrier tape is constructed from conductive Polystyrene (IV). The uniform film thickness t is 0.3 mm. The Reel size is 10 inches with a maximum quantity per reel of 500 pieces or 13 inches with a maximum quantity per reel of 1500 pieces.

Figure 12: Tape and reel specifications. Package dimensions are given in table 7

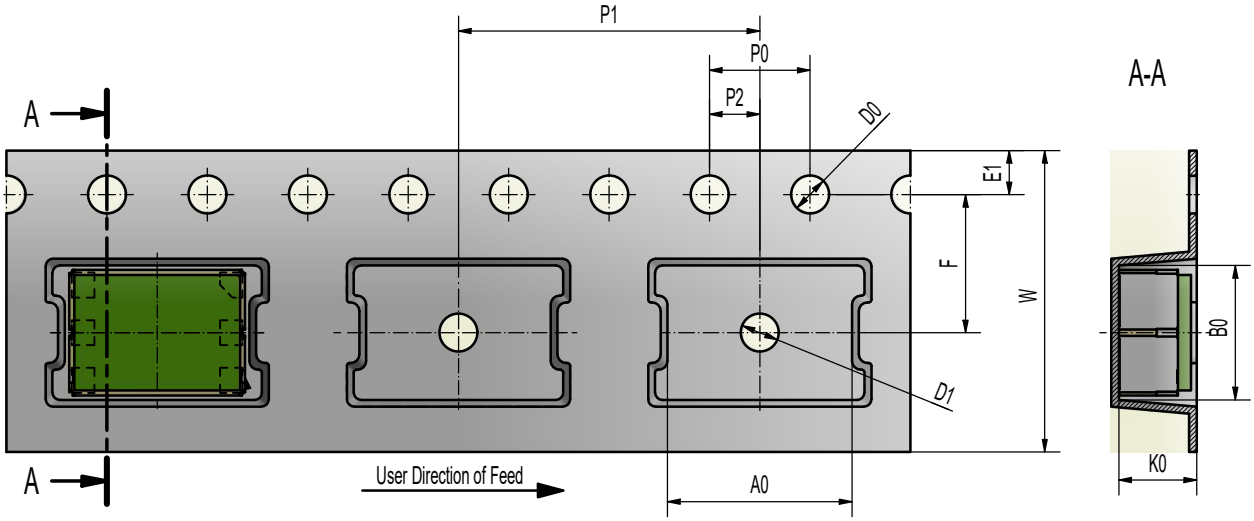

Table 7: Dimensions for figure 12 are given in [mm].

Device	A0	B0	E1	K0	F	P1	W	PO	P2	D0	D1	t
5.0 × 7.0	7.35	5.35	1.75	3.1	5.5	12	12	4.0	2.0	1.5	1.5	0.3

Excelitas Technologies GmbH & Co. KG
Wenzel-Jaksch-Str. 31
65199 Wiesbaden Germany
Tel.: +49 (0)611 492 430

Figure 13: Packaging specifications

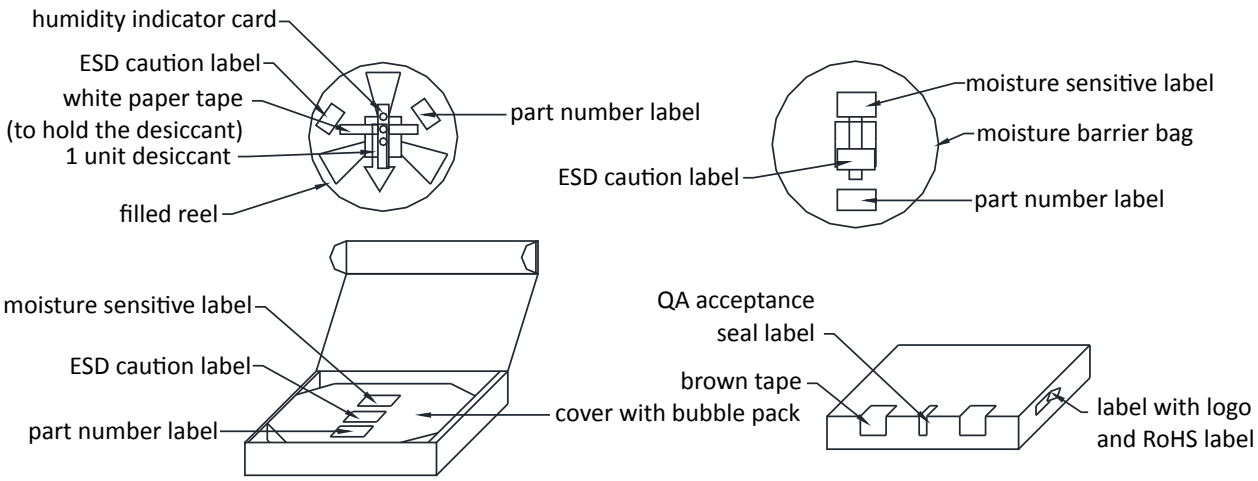

Excelitas Technologies GmbH & Co. KG
Wenzel-Jaksch-Str. 31
65199 Wiesbaden Germany
Tel.: +49 (0)611 492 430