100W, 9 to 53V Input Non-Isolated Step-Down DC-DC Buck Converter

https://product.tdk.com/en/power/i3a
www.emea.lambda.tdk.com/i3a

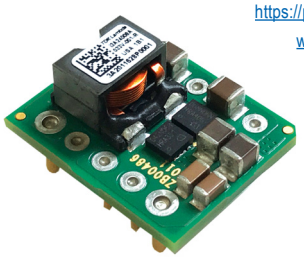

Industrial COTS Test COMM Broadcast Robotics

The i3A series of non-isolated DC-DC step-down converters are ideal for creating additional output voltage rails from a single output 12V, 24V or 48V AC-DC or DC-DC power supply including battery sources. The highly efficient i3A series accepts a wide DC input and has a wide output adjustment range in a compact 1/32nd brick footprint. Output trim, remote sense and negative logic remote On-Off comes as standard features.

Features	Benefits
• Up to 100 W in a 1/32nd brick package	• High Power Density, Less Board Area Needed
• High Efficiency Up to 98%	• Longer Battery Life / Less Power Consumed
• Wide 3.3 to 16.5V or 5 to 30V Output Adjustment	• One Part Supports Multiple System Voltages
• 9 to 53V Input Range	• Can Operate From Different DC Source Voltages Including Batteries
• Low Component Count With Minimal External Components	• Low Cost
• Minimal Derating Requirements in Low Airflow Environments	• Easy to Cool in End System

Model Selector

Model	Input Voltage (V)	Output Voltage (V)	Max Current (A)	Max Power (W)	Negative Logic On/Off	Positive Logic On/Off
i3A4W008A033V-001-R	9 - 53	3.3 - 16.5	8	100	Yes	-
i3A4W005A150V-001-R	9 - 53	5 - 30	4.5	100	Yes	-

Related Products

Type	Part Number	Description
DC-DC Buck Converter	i6A4W	250W, Input 9-53V, Output 3.3-40V 10A or 3.3-15V 20A
DC-DC Buck Converter	i6A24	250W, Input 9-40V, Output 3.3-24V 14A
DC-DC Buck Converter	i6AN	75W, Input 9-40V, Negative Output -3.3 to -30V, 8A
DC-DC Buck Converter	i7A	500-750W, Input 18-60V or 18-32V, Output 3.3-24V 33A or 3.3-18V 45A
DC-DC Buck-Boost Converter	i7C	300W, Input 9-53V or 9-36V, Output 9.6-48V 8A, 5-28V 12.5A or 8-24V 20A
Evaluation Kit	i3A05A-C01-EVK-S1	Compact Evaluation kit with i3A4W005A150V-001-R module
Evaluation Kit	i3A08A-C01-EVK-S1	Compact Evaluation kit with i3A4W008A033V-001-R module
Evaluation Kit	i3A5A8A-001-VK-D2PP	Evaluation kit with i3A4W005A150V-001-R and i3A4W008A033V-001-R modules

Specification

Model		i3A4W008A033V	i3A4W005A150V
Input			
Input Voltage Range	Vdc	9 - 53	
Input Current (max)	A	10 (max)	
Turn-ON Input Voltage	Vdc	8	
Turn-OFF Input Voltage	Vdc	7 - 9	
Efficiency	%	89 - 96.5	95.5 - 98
Safety Certifications and Markings	-	IEC/UL/CSA/EN 62368-1, 60950-1, CE Mark and UKCA Mark	
Output			
Output Voltage Tolerance	%	± 4	
Line Regulation	%	0.3	0.2
Load Regulation	%	0.7	0.5
External Load Capacitance (1)	uF	0 - 1200	0 - 1000
Ripple & Noise	mVpp	20	40
Switching Frequency	kHz	450	400
Overcurrent Protection Threshold (typ)	A	14	9
Overtemperature Protection	-	Yes	
Output Voltage Adjustment Range		14	9
Remote Sense	-	(+) Sense, compensating up to 5% of output voltage	
Remote On/Off		Negative Logic	
Environmental			
Operating Temperature (Tref)	°C	-40 to 125	
Storage Temperature	°C	-55 to 125	
Humidity (non condensing)	%RH	5 - 95 (Operating & Storgae)	
Cooling	-	Convection or forced air	
Other			
Weight (Typ)	g	8	
Size (LxWxH)	mm	19.1 x 23.4 x 9.6	
Size (LxWxH)	Inches	0.75 x 0.92 x 0.38	
MTBF - Telcordia SR-332		> 14 MHrs; 100% Load; Ta = 40 °C	
Warranty	yrs	3 years	

(1) For Vo ≥ 8Vdc, minimum Cout = 200 uF.
(2) See website for detailed product specifications.

Pinout

PIN	Function	PIN	Function
1	Vin (+)	5	Power Good (option)
2	On / Off	6	Trim
3	Vin (-) / GND	7	Sense +
4	Vout (-) / GND	8	Vout (+)

Pin base material is brass or copper with gold over nickel plating.

Typical Application Circuit (i3A)

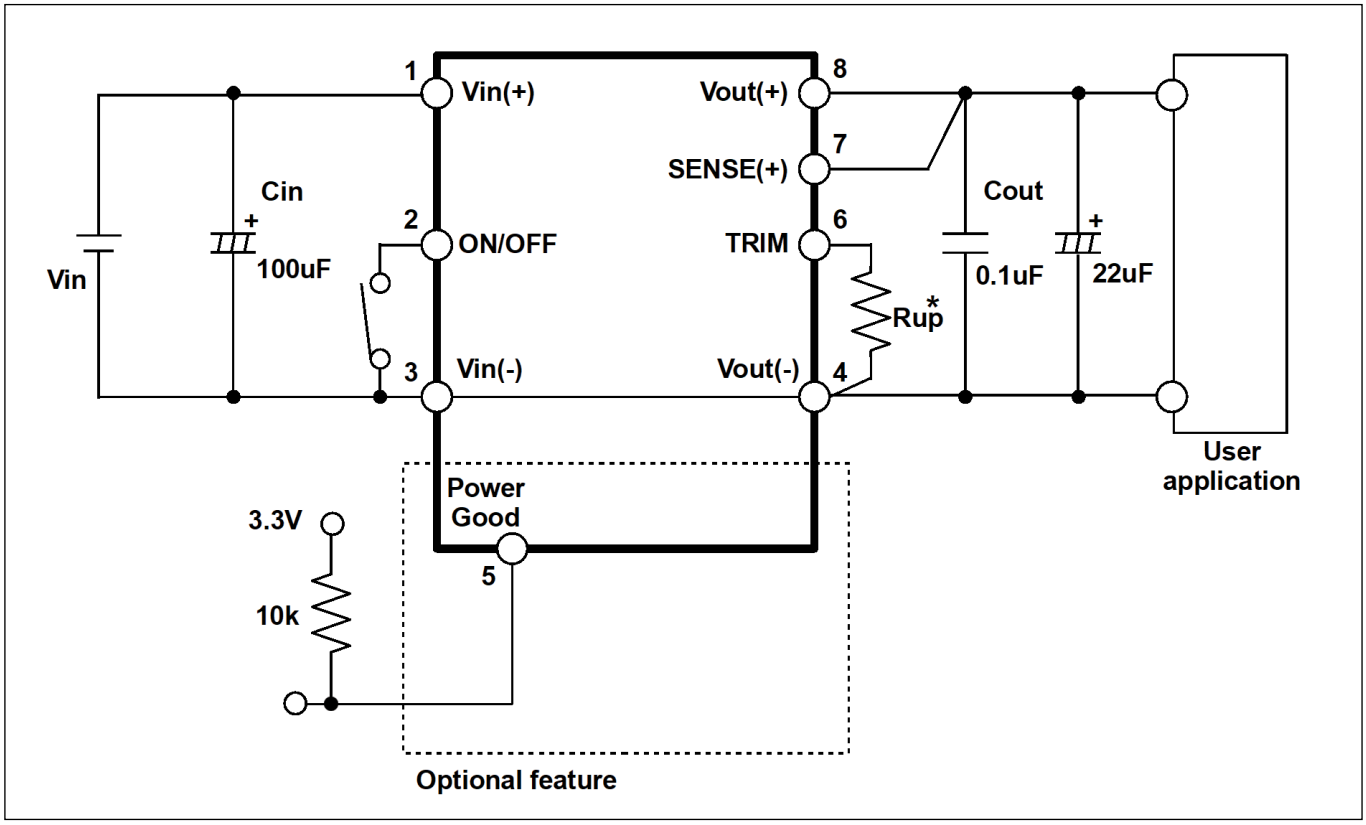

Recommendations:
1) TRIM resistor Rup should be connected to the i3A module as close as possible.

Output vs. Input Voltage Operating Range

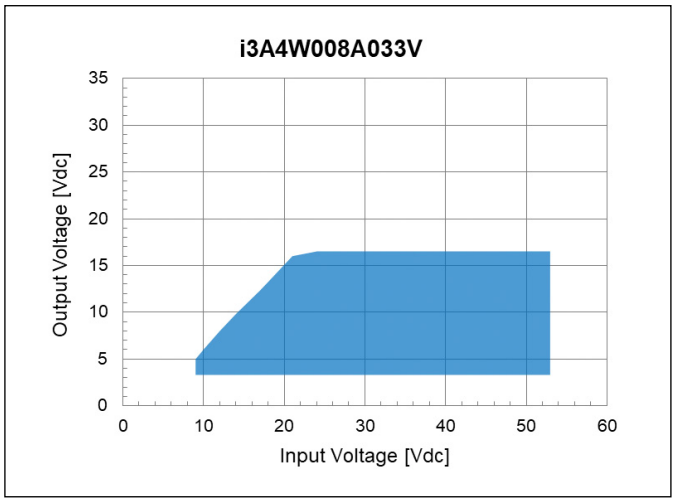

Output vs. Input Voltage Operating Range

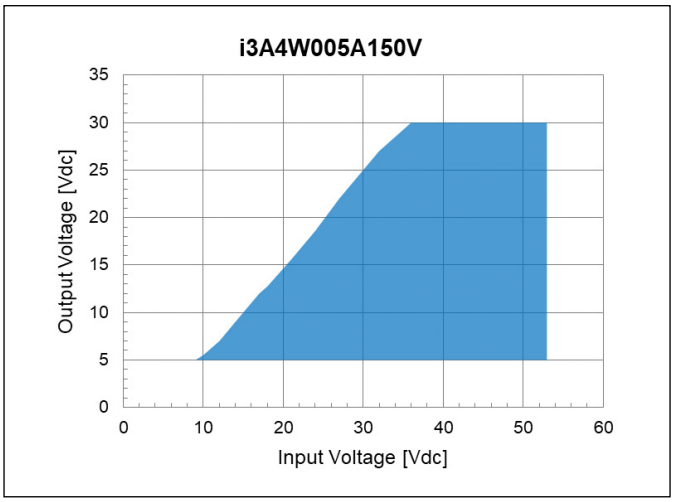

Mechanical Specification

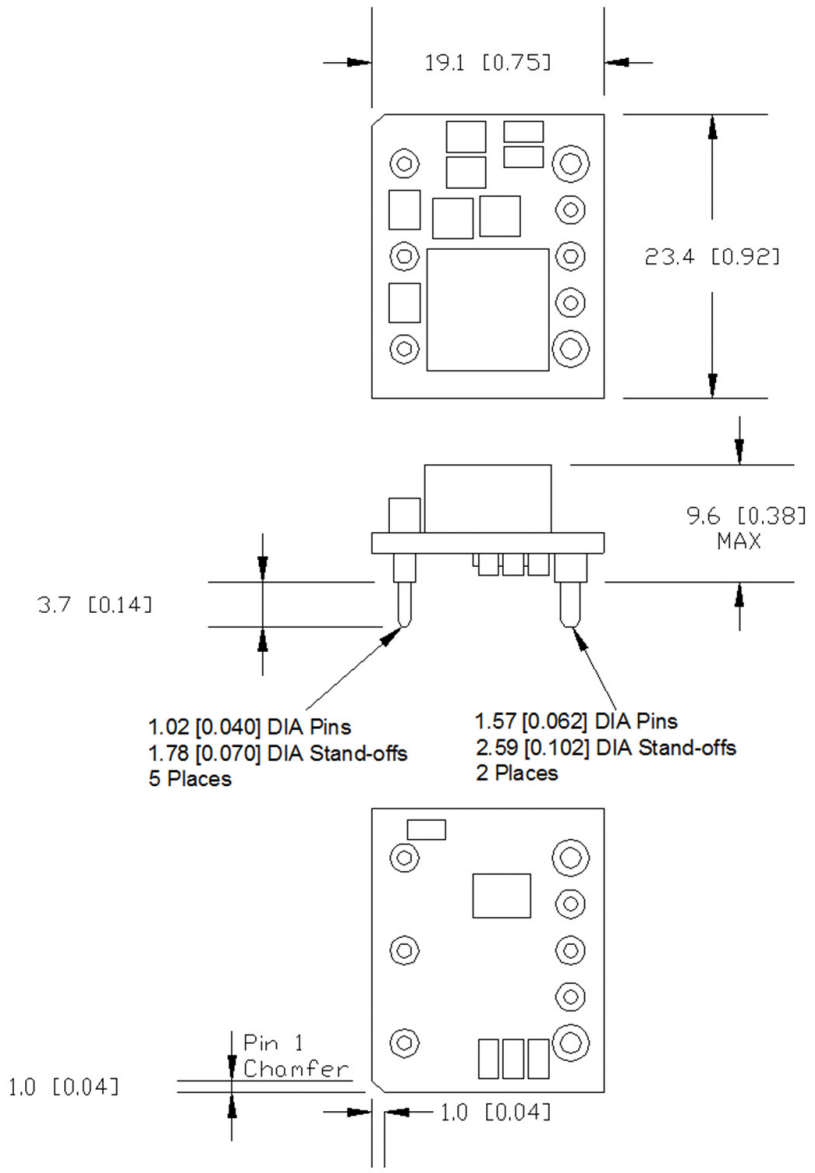

Recommended PCB Hole Pattern

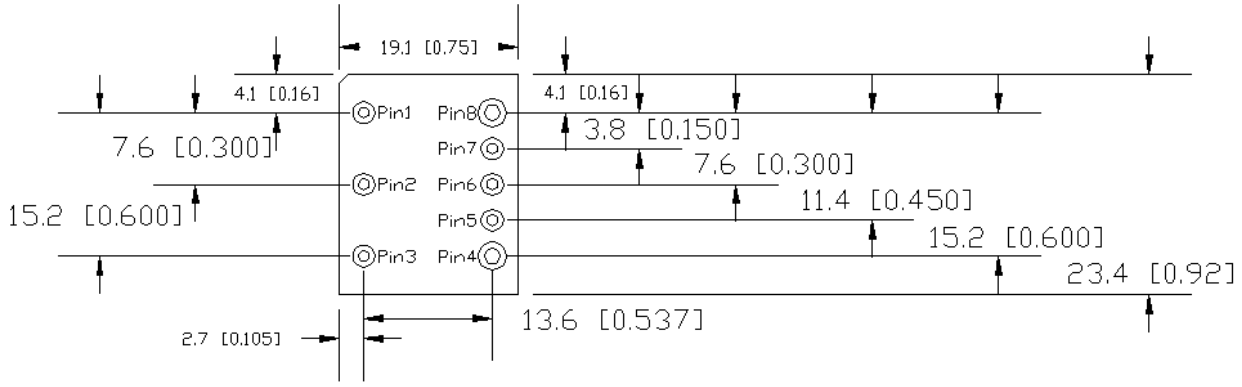

TDK-Lambda France SAS
Tel: +33 1 60 12 71 65
france@fr.tdk-lambda.com
www.emea.lambda.tdk.com/fr

Italy Sales Office
Tel: +39 02 61 29 38 63
info.italia@it.tdk-lambda.com
www.emea.lambda.tdk.com/it

Netherlands
info@nl.tdk-lambda.com
www.emea.lambda.tdk.com/nl

TDK-Lambda Germany GmbH
Tel: +49 7841 666 0
info@de.tdk-lambda.com
www.emea.lambda.tdk.com/de

Austria Sales Office
Tel: +43 2256 655 84
info@at.tdk-lambda.com
www.emea.lambda.tdk.com/at

Switzerland Sales Office
Tel: +41 44 850 53 53
info@ch.tdk-lambda.com
www.emea.lambda.tdk.com/ch

Nordic Sales Office
Tel: +45 8853 8086
info@dk.tdk-lambda.com
www.emea.lambda.tdk.com/dk

TDK-Lambda UK Ltd.
Tel: +44 (0) 12 71 85 66 66
info@uk.tdk-lambda.com
www.emea.lambda.tdk.com/uk

TDK-Lambda Ltd.
Tel: +9 723 902 4333
info@tdk-lambda.co.il
www.emea.lambda.tdk.com/il

C.I.S.
Commercial Support:
Tel: +7 (495) 665 2627
Technical Support:
Tel: +7 (812) 658 0463
info@tdk-lambda.ru
www.emea.lambda.tdk.com/ru

TDK-Lambda Americas
Tel: +1 800-LAMBDA-4 or 1-800-526-2324
powersolutions@us.tdk-lambda.com
www.us.lambda.tdk.com

TDK Electronics do Brasil Ltda
Tel: +55 11 3289-9599
sales.br@tdk-electronics.tdk.com
www.tdk-electronics.tdk.com/en

TDK-Lambda Corporation
Tel: +81-3-6778-1113
www.jp.lambda.tdk.com

TDK-Lambda (China) Electronics Co. Ltd.
Tel: +86 21 6485-0777
powersolutions@cn.tdk-lambda.com
www.lambda.tdk.com.cn

TDK-Lambda Singapore Pte Ltd.
Tel: +65 6251 7211
tls.mkt@sg.tdk-lambda.com
www.sg.lambda.tdk.com

TDK India Private Limited, Power Supply Division
Tel: +91 80 4039-0660
mathew.philip@in.tdk-lambda.com
www.sg.lambda.tdk.com

For Additional Information, please visit
https://product.tdk.com/en/power/

i3A 260817 December 1st, 2021 V2