W29N02KVxxAF
2G-BIT 3.3V
NAND FLASH MEMORY

Table of Contents

1. GENERAL DESCRIPTION 7
2. FEATURES 7
3. PACKAGE TYPES AND PIN CONFIGURATIONS 8
   - 3.1 Pin Assignment 48-pin TSOP1(x8) 8
   - 3.2 Pin Assignment 48 ball VFBGA (x8) 9
   - 3.3 Pin Assignment 63 ball VFBGA (x8) 10
   - 3.4 Pin Descriptions 11
4. PIN DESCRITPIONS 12
   - 4.1 Chip Enable (#CE) 12
   - 4.2 Write Enable (#WE) 12
   - 4.3 Read Enable (#RE) 12
   - 4.4 Address Latch Enable (ALE) 12
   - 4.5 Command Latch Enable (CLE) 12
   - 4.6 Write Protect (#WP) 12
   - 4.7 Ready/Busy (RY/#BY) 12
   - 4.8 Input and Output (I/Ox) 12
5. BLOCK DIAGRAM 13
6. MEMORY ARRAY ORGANIZATION 14
   - 6.1 Array Organization (x8) 14
7. MODE SELECTION TABLE 15
8. COMMAND TABLE 16
9. DEVICE OPERATIONS 17
   - 9.1 READ Operation 17
     - 9.1.1 PAGE READ (00h-30h) 17
     - 9.1.2 TWO PLANE READ (00h-00h-30h) 17
     - 9.1.3 RANDOM DATA OUTPUT (05h-E0h) 19
     - 9.1.4 READ ID (90h) 20
     - 9.1.5 READ PARAMETER PAGE (ECh) 21
     - 9.1.6 READ STATUS (70h) 23
     - 9.1.7 READ STATUS ENHANCED (78h) 25
     - 9.1.8 READ UNIQUE ID (EDh) 26
   - 9.2 PROGRAM Operation 27
     - 9.2.1 PAGE PROGRAM (80h-10h) 27
     - 9.2.2 SERIAL DATA INPUT (80h) 27
     - 9.2.3 RANDOM DATA INPUT (85h) 28
     - 9.2.4 TWO PLANE PAGE PROGRAM 29
   - 9.3 COPY BACK Operation 30
     - 9.3.1 READ for COPY BACK (00h-35h) 30
     - 9.3.2 PROGRAM for COPY BACK (85h-10h) 31
     - 9.3.3 TWO PLANE READ for COPY BACK 32
     - 9.3.4 TWO PLANE PROGRAM for COPY BACK 32
   - 9.4 BLOCK ERASE Operation 36
     - 9.4.1 BLOCK ERASE (60h-D0h) 36

9.4.2 TWO PLANE BLOCK ERASE 37
9.5 RESET Operation 38
9.5.1 RESET (FFh) 38
9.6 FEATURE OPERATION 39
9.6.1 GET FEATURES (EEh) 42
9.6.2 SET FEATURES (EFh) 43
9.7 ONE TIME PROGRAMMABLE (OTP) Area 44
9.8 WRITE PROTECT 45
9.9 BLOCK LOCK 47
10. ELECTRICAL CHARACTERISTICS 48
10.1 Absolute Maximum Ratings (3.3V) 48
10.2 Operating Ranges (3.3V) 48
10.3 Device Power-up Timing 49
10.4 DC Electrical Characteristics (3.3V) 50
10.5 AC Measurement Conditions (3.3V) 51
10.6 AC Timing Characteristics for Command, Address and Data Input (3.3V) 52
10.7 AC Timing Characteristics for Operation (3.3V) 53
10.8 Program and Erase Characteristics 54
11. TIMING DIAGRAMS 55
12. INVALID BLOCK MANAGEMENT 64
12.1 Invalid Blocks 64
12.2 Initial Invalid Blocks 64
12.3 Error in Operation ..... エラー! ブックマークが定義されていません。
12.4 Addressing in program operation 65
13. PACKAGE DIMENSIONS 66
13.1 TSOP 48-pin 12x20 66
13.2 Fine-Pitch Ball Grid Array 48-Ball 67
13.3 Fine-Pitch Ball Grid Array 63-Ball 68
14. ORDERING INFORMATION 69
15. VALID PART NUMBERS 70
16. REVISION HISTORY 71

List of Tables

Table 3-1 Pin Descriptions 11
Table 6-1 Addressing 14
Table 7-1 Mode Selection 15
Table 8-1 Command Table....16
Table 9-1 Device ID and Configuration Codes for Address 00h 21
Table 9-2 ONFI Identifying Codes for Address 20h 21
Table 9-3 Parameter Page Output Value....23
Table 9-4 Status Register Bit Definition 24
Table 9-5 Features 39
Table 9-6 Feature Address 80h....40
Table 9-7 Feature Address 81h....41
Table 10-1 Absolute Maximum Ratings 48
Table 10-2 Operating Ranges 48
Table 10-3 DC Electrical Characteristics 50
Table 10-4 AC Measurement Conditions 51
Table 10-5 AC Timing Characteristics for Command, Address and Data Input 52
Table 10-6 AC Timing Characteristics for Operation 53
Table 10-7 Program and Erase Characteristics 54
Table 12-1 Valid Block Number....64
Table 12-2 Block Failure 65
Table 15-1 Part Numbers for Industrial Temperature 70
Table 16-1 History Table 71

List of Figures

Figure 3-1 Pin Assignment 48-pin TSOP1 (Package code S) 8
Figure 3-2 Pin Assignment 48-ball VFBGA (Package code D) 9
Figure 3-3 Pin Assignment 63-ball VFBGA (Package code B) 10
Figure 5-1 NAND Flash Memory Block Diagram 13
Figure 6-1 Array Organization 14
Figure 9-1 Page Read Operations 17
Figure 9-2 Random Data Output 19
Figure 9-3 Two Plane Random Data Output 19
Figure 9-4 Read ID 20
Figure 9-5 Read Parameter Page 21
Figure 9-6 Read Status Operation 23
Figure 9-7 Read Status Enhanced (78h) Operation 25
Figure 9-8 Read Unique ID 26
Figure 9-9 Page Program 27
Figure 9-10 Random Data Input 28
Figure 9-11 Two Plane Page Program 30
Figure 9-12 Program for copy back Operation 33
Figure 9-13 Copy Back Operation with Random Data Input 33
Figure 9-14 Two Plane Copy Back 34
Figure 9-15 Two Plane Copy Back with Random Data Input 34
Figure 9-16 Two Plane Program for Copy Back 35
Figure 9-17 Block Erase Operation 36
Figure 9-18 Two Plane Block Erase Operation 37
Figure 9-19 Reset Operation 38
Figure 9-20 Get Feature Operation 42
Figure 9-21 Set Feature Operation 43
Figure 9-22 Erase Enable 45
Figure 9-23 Erase Disable 45
Figure 9-24 Program Enable 45
Figure 9-25 Program Disable 46
Figure 9-26 Program for Copy Back Enable 46
Figure 9-27 Program for Copy Back Disable 46
Figure 10-1 Power ON/OFF Sequence 49
Figure 11-1 Command Latch Cycle 55
Figure 11-2 Address Latch Cycle 55
Figure 11-3 Data Latch Cycle 56
Figure 11-4 Serial Access Cycle after Read 56
Figure 11-5 Serial Access Cycle after Read (EDO) 57
Figure 11-6 Read Status Operation 57
Figure 11-7 Page Read Operation 58
Figure 11-8 #CE Don't Care Read Operation 58
Figure 11-9 Random Data Output Operation 59
Figure 11-10 Read ID 60
Figure 11-11 Page Program 60

Figure 11-12 #CE Don't Care Page Program Operation....61
Figure 11-13 Page Program with Random Data Input....61
Figure 11-14 Copy Back....62
Figure 11-15 Block Erase....62
Figure 11-16 Reset....63
Figure 12-1 Flow Chart of Create Initial Invalid Block Table....64
Figure 12-2 Bad Block Replacement....65
Figure 13-1 TSOP 48-PIN 12X20mm....66
Figure 13-2 Fine-Pitch Ball Grid Array 48-Ball....67
Figure 13-3 Fine-Pitch Ball Grid Array 63-Ball....68
Figure 14-1 Ordering Part Number Description....69

1. GENERAL DESCRIPTION

The W29N02KV (2G-bit) NAND Flash memory provides a storage solution for embedded systems with limited space, pins and power. It is ideal for code shadowing to RAM, solid state applications and storing media data such as, voice, video, text and photos. The device operates on a single 2.7V to 3.6V power supply with active current consumption as low as 25mA at 3V and 10uA for CMOS standby current.

The memory array totals 285,212,672 bytes, and organized into 2,048 erasable blocks of 139,264 bytes. Each block consists of 64 programmable pages of 2,176-bytes each. Each page consists of 2,176-bytes for the main data storage and for the spare data area (The spare area is typically used for error management functions).

The W29N02KV supports the standard NAND flash memory interface using the multiplexed 8-bit bus to transfer data, addresses, and command instructions. The five control signals, CLE, ALE, #CE, #RE and #WE handle the bus interface protocol. Also, the device has two other signal pins, the #WP (Write Protect) and the RY/#BY (Ready/Busy) for monitoring the device status.

2. FEATURES

- **Basic Features**
  - Density: 2Gbit (Single chip solution)
  - Vcc: 2.7V to 3.6V
  - Bus width: x8
  - Operating temperature
    - Industrial: -40°C to 85°C
- **Single-Level Cell (SLC) technology.**
- **Organization**
  - Density: 2G-bit/256M-byte
  - Page size
    - 2,176 bytes
  - Block size
    - 64 pages
- **Highest Performance**
  - Read performance (Max.)
    - Random read: 25us
    - Sequential read cycle: 25ns
  - Write Erase performance
    - Page program time: 250us (typ.)
    - Block erase time: 2ms (typ.)
  - Endurance: 60,000 Erase/Program Cycles[(1)]
  - Data retention: 10-years
- **Command set**
  - Standard NAND command set
  - Additional command support
    - Copy Back
    - Two-plane operation
  - Contact Winbond for OTP feature
  - Contact Winbond for Block Lock feature
- **Lowest power consumption**
  - Read: 25mA(typ.)
  - Program/Erase: 25mA(typ.)
  - CMOS standby: 10uA(typ.)
- **Space Efficient Packaging**
  - 48-pin standard TSOP1
  - 48-ball VFBGA
  - 63-ball VFBGA
  - Contact Winbond for stacked packages/KGD

Note:

1. Endurance specification is based on 4bit/544 byte ECC (Error Correcting Code).

3. PACKAGE TYPES AND PIN CONFIGURATIONS

W29N02KV is offered in a 48-pin TSOP1 package (Code S) and 48-ball VFBGA package (Code D) as shown in Figure 3-1 to 3-2, respectively. Package diagrams and dimensions are illustrated in Section: Package Dimensions.

3.1 Pin Assignment 48-pin TSOP1(x8)

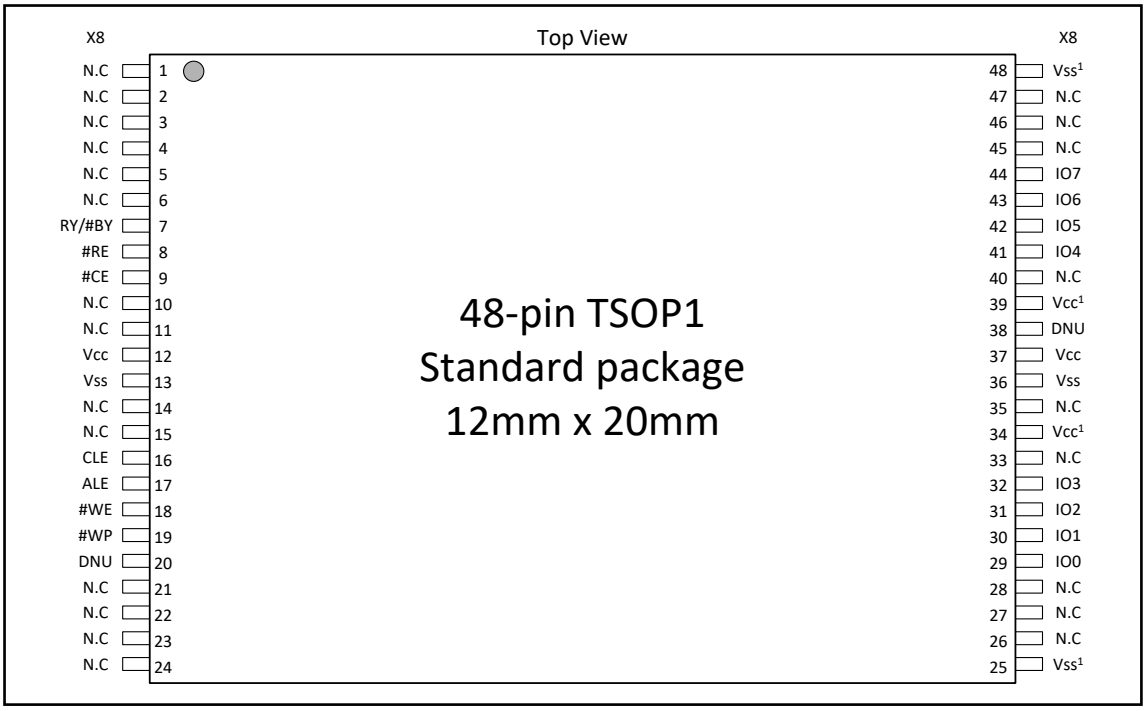

Figure 3-1 Pin Assignment 48-pin TSOP1 (Package code S)

Note:

1. **These pins might not be connected in the package. Winbond recommends connecting these pins to the designed external sources for ONFI compatibility.**

3.2 Pin Assignment 48 ball VFBGA (x8)

Top View, ball down

	1	2	3	4	5	6
A	#WP	ALE	Vss	#CE	#WE	RY/#BY
B	N.C	#RE	CLE	N.C	N.C	N.C
C	N.C	N.C	N.C	N.C	N.C	N.C
D	N.C	N.C	N.C	N.C	N.C	N.C
E	DNU	N.C	DNU	N.C	N.C	N.C
F	N.C	IO0	N.C	N.C	N.C	Vcc
G	N.C	IO1	N.C	Vcc	IO5	IO7
H	Vss	IO2	IO3	IO4	IO6	Vss

Figure 3-2 Pin Assignment 48-ball VFBGA (Package code D)

3.3 Pin Assignment 63 ball VFBGA (x8)

Top View, ball down

	1	2	3	4	5	6	7	8	9	10
A	N.C	N.C							N.C	N.C
B	N.C								N.C	N.C
C			#WP	ALE	Vss	#CE	#WE	RY/#BY		
D			N.C	#RE	CLE	N.C	N.C	N.C		
E			N.C	N.C	N.C	N.C	N.C	N.C		
F			N.C	N.C	N.C	N.C	N.C	N.C		
G			DNU	N.C	DNU	N.C	N.C	N.C		
H			N.C	IO0	N.C	N.C	N.C	Vcc		
J			N.C	IO1	N.C	Vcc	IO5	IO7		
K			Vss	IO2	IO3	IO4	IO6	Vss		
L	N.C	N.C							N.C	N.C
M	N.C	N.C							N.C	N.C

Figure 3-3 Pin Assignment 63-ball VFBGA (Package code B)

3.4 Pin Descriptions

PIN NAME	I/O	FUNCTION
#WP	I	Write Protect
ALE	I	Address Latch Enable
#CE	I	Chip Enable
#WE	I	Write Enable
RY/#BY	O	Ready/Busy
#RE	I	Read Enable
CLE	I	Command Latch Enable
I/O[0-7]	I/O	Data Input/Output (x8)
Vcc	Supply	Power supply
Vss	Supply	Ground
DNU	-	Do Not Use: DNUs must be left unconnected.
N.C	-	No Connect: NCs are not internally connected. They can be driven or left unconnected.

Table 3-1 Pin Descriptions

Note:

1. **Connect all Vcc and Vss pins to power supply or ground. Do not leave Vcc or Vss disconnected.**

4. PIN DESCRITPIONS

4.1 Chip Enable (#CE)

#CE pin enables and disables device operation. When #CE is high the device is disabled and the I/O pins are set to high impedance and enters into standby mode if not busy. When #CE is set low the device will be enabled, power consumption will increase to active levels and the device is ready for Read and Write operations.

4.2 Write Enable (#WE)

#WE pin enables the device to control write operations to input pins of the device. Such as, command instructions, addresses and data that are latched on the rising edge of #WE.

4.3 Read Enable (#RE)

#RE pin controls serial data output from the pre-loaded Data Register. Valid data is present on the I/O bus after the tREA period from the falling edge of #RE. Column addresses are incremented for each #RE pulse.

4.4 Address Latch Enable (ALE)

ALE pin controls address input to the address register of the device. When ALE is active high, addresses are latched via the I/O pins on the rising edge of #WE.

4.5 Command Latch Enable (CLE)

CLE pin controls command input to the command register of the device. When CLE is active high, commands are latched into the command register via I/O pins on the rising edge of #WE.

4.6 Write Protect (#WP)

#WP pin can be used to prevent the inadvertent program/erase to the device. When #WP pin is active low, all program/erase operations are disabled.

4.7 Ready/Busy (RY/#BY)

RY/#BY pin indicates the device status. When RY/#BY output is low, it indicates that the device is processing either a program, erase or read operations. When it returns to high, those operations have completed. RY/#BY pin is an open drain.

4.8 Input and Output (I/Ox)

I/Ox bi-directional pins are used for the following; command, address and data operations.

5. BLOCK DIAGRAM

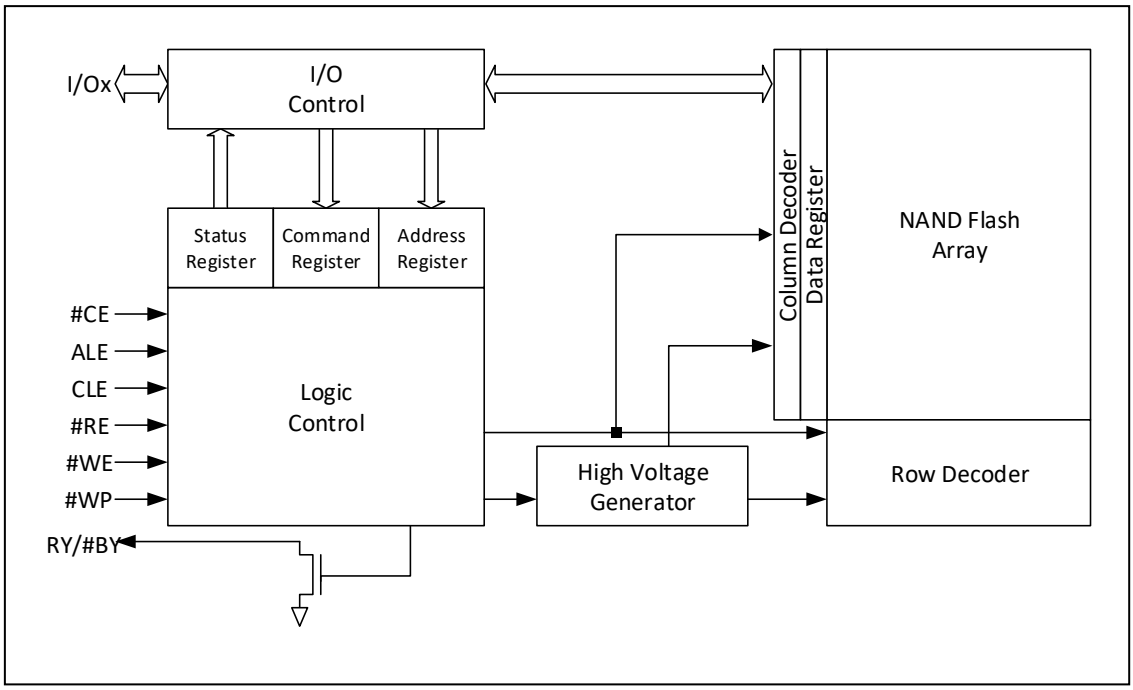

Figure 5-1 NAND Flash Memory Block Diagram

6. MEMORY ARRAY ORGANIZATION

6.1 Array Organization (x8)

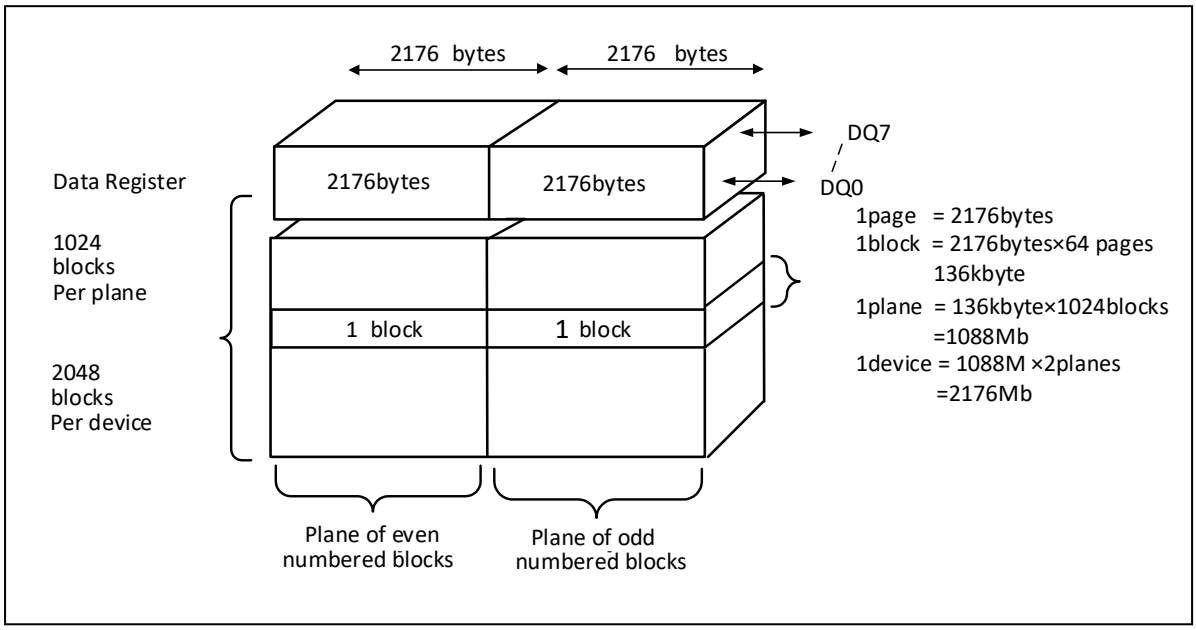

Figure 6-1 Array Organization

	I/O7	I/O6	I/O5	I/O4	I/O3	I/O2	I/O1	I/O0
1st cycle	A7	A6	A5	A4	A3	A2	A1	A0
2nd cycle	L	L	L	L	A11	A10	A9	A8
3rd cycle	A19	A18	A17	A16	A15	A14	A13	A12
4th cycle	A27	A26	A25	A24	A23	A22	A21	A20
5th cycle	L	L	L	L	L	L	L	A28

Table 6-1 Addressing

Notes:

1. **"L" indicates a low condition, which must be held during the address cycle to insure correct processing.**
2. **A0 to A11 during the 1st and 2nd cycles are column addresses. A12 to A28 during the 3rd, 4th and 5th cycles are row addresses.**
3. **A18 is plane address**
4. **The device ignores any additional address inputs that exceed the device's requirement.**

7. MODE SELECTION TABLE

MODE		CLE	ALE	#CE	#WE	#RE	#WP
Read mode	Command input	H	L	L	↑	H	X
	Address input	L	H	L	↑	H	X
Program Erase mode	Command input	H	L	L	↑	H	H
	Address input	L	H	L	↑	H	H
Data input		L	L	L	↑	H	H
Sequential Read and Data output		L	L	L	H	↓	X
During read (busy)		X	X	X	X	H	X
During program (busy)		X	X	X	X	X	H
During erase (busy)		X	X	X	X	X	H
Write protect		X	X	X	X	X	L
Standby		X	X	H	X	X	0V/Vcc

Table 7-1 Mode Selection

Notes:

1. **"H" indicates a HIGH input level, "L" indicates a LOW input level, and "X" indicates a Don't Care Level.**
2. **#WP should be biased to CMOS HIGH or LOW for standby.**

8. COMMAND TABLE

COMMAND	1ST CYCLE	2ND CYCLE	3rd CYCLE	4th CYCLE	Acceptable during busy
PAGE READ	00h	30h			
READ for COPY BACK	00h	35h			
READ ID	90h				
READ STATUS	70h				Yes
RESET	FFh				Yes
PAGE PROGRAM	80h	10h			
PROGRAM for COPY BACK	85h	10h			
BLOCK ERASE	60h	D0h			
RANDOM DATA INPUT*1	85h				
RANDOM DATA OUTPUT*1	05h	E0h			
READ PARAMETER PAGE	ECh				
READ UNIQUE ID	EDh				
GET FEATURES	EEh				
SET FEATURES	EFh				
READ STATUS ENHANCED	78h				Yes
TWO PLANE READ PAGE	00h	00h	30h		
TWO PLANE READ FOR COPY BACK	00h	00h	35h		
TWO PLANE RANDOM DATA READ	06h	E0h			
TWO PLANE PROGRAM(TRADITIONAL)	80h	11h	81h	10h	
TWO PLANE PROGRAM(ONFI)	80h	11h	80h	10h	
TWO PLANE PROGRAM FOR COPY BACK(TRADITIONAL)	85h	11h	81h	10h	
TWO PLANE PROGRAM FOR COPY BACK(ONFI)	85h	11h	85h	10h	
TWO PLANE BLOCK ERASE(TRADITIONAL)	60h	60h	D0h		
TWO PLANE BLOCK ERASE(ONFI)	60h	D1h	60h	D0h	

Table 8-1 Command Table

Notes:

1. **RANDOM DATA INPUT and RANDOM DATA OUTPUT command is only to be used within a page.**
2. **Any commands that are not in the above table are considered as undefined and are prohibited as inputs.**
3. **Do not cross plane address boundaries when using Copy Back Read and Program for copy back.**

9. DEVICE OPERATIONS

9.1 READ Operation

9.1.1 PAGE READ (00h-30h)

When the device powers on, 00h command is latched to command register. Therefore, system only issues five address cycles and 30h command for initial read from the device. This operation can also be entered by writing 00h command to the command register, and then write five address cycles, followed by writing 30h command. After writing 30h command, the data is transferred from NAND array to Data Register during tR. Data transfer progress can be done by monitoring the status of the RY/#BY signal output. RY/#BY signal will be LOW during data transfer. Also, there is an alternate method by using the READ STATUS (70h) command. If the READ STATUS command is issued during read operation, the Read (00h) command must be re-issued to read out the data from Data Register. When the data transfer is complete, RY/#BY signal goes HIGH, and the data can be read from Data Register by toggling #RE. Read is sequential from initial column address to the end of the page. (See Figure 9-1)

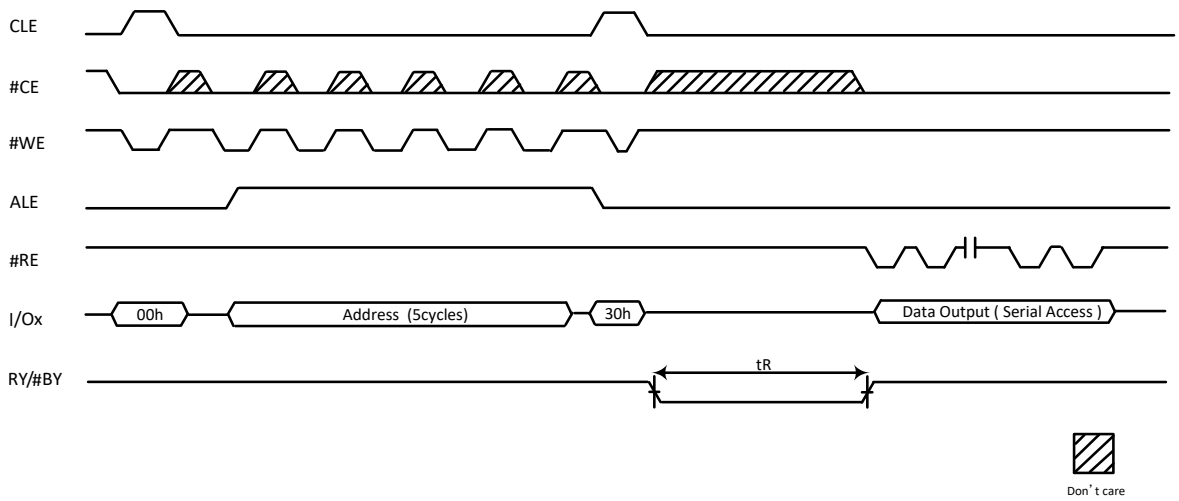

Figure 9-1 Page Read Operations

9.1.2 TWO PLANE READ (00h-00h-30h)

TWO PLANE READ (00h-00h-30h) transfers two pages data from the NAND array to the data registers. Each page address have to be indicated different plane address.

To set the TWO PLANE READ mode, write the 00h command to the command register, and then write five address cycles for plane 0. Secondly, write the 00h command to the command register, and five address cycles for plane 1. Finally, the 30h command is issued. The first-plane and second-plane addresses must be identical for all of issued address except plane address.

After the 30h command is written, page data is transferred from both planes to their respective data registers in tR. RY/#BY goes LOW While these are transfered,. When the transfers are complete, RY/#BY goes HIGH. To read out the data, at first, system writes TWO PLANE RAMDOM DATA READ (06h-E0h) command to select a plane, next, repeatedly pulse #RE to read out the data from selected plane. To change the plane address, issues TWO PLANE RANDOM DATA READ (06h-E0h) command to select the another plane address, then repeatedly pulse #RE to read out the data from the selected plane data register.

Alternatively, data transfers can be monitored by the READ STATUS (70h). When the transfers are complete, status register bit 6 is set to 1. To read data from the first of the two planes even when READ STATUS ENHANCED (78h) command is used, the system must issue the TWO PLANE RANDOM DATA READ (06h-E0h) command at first and pulse #RE repeatedly.

Write a TWO PLANE RANDOM DATA READ (06h-E0h) command to select the other plane ,after the data cycle is complete. pulse #RE repeatedly to output the data beginning at the specified column address,

During TWO PLANE READ operation,the READ STATUS ENHANCED (78h) command is prohibited .

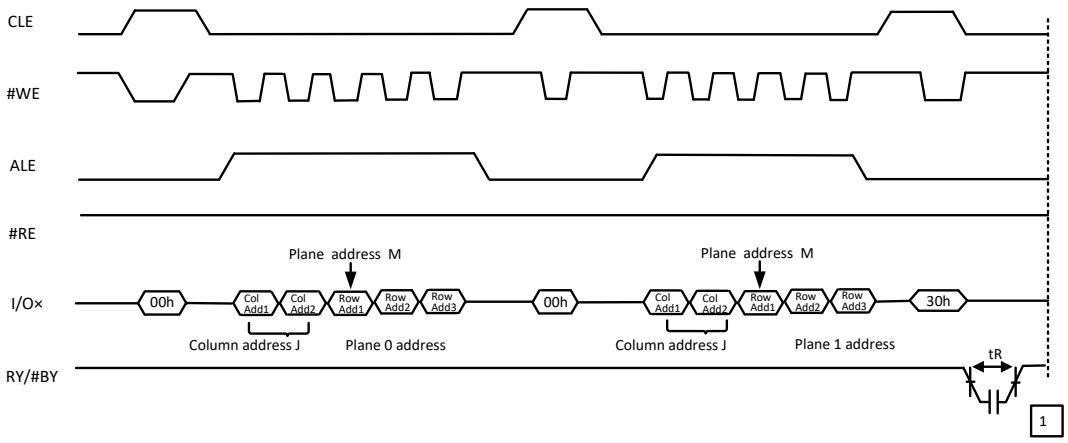

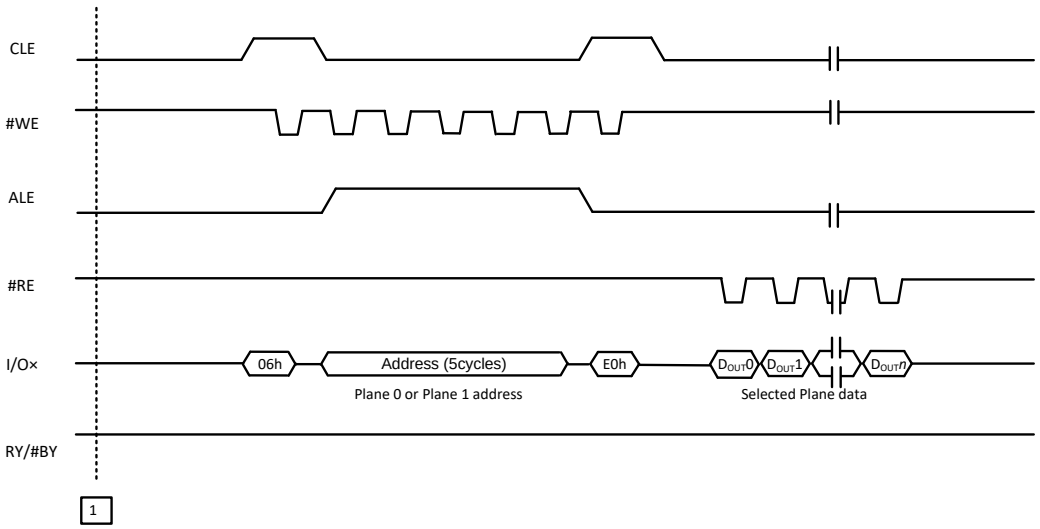

9.1.3 RANDOM DATA OUTPUT (05h-E0h)

The RANDOM DATA OUTPUT allows the selection of random column addresses to read out data from a single or multiple of addresses. The use of the RANDOM DATA OUTPUT command is available after the PAGE READ (00h-30h) sequence by writing the 05h command following by the two cycle column address and then the E0h command. Toggling #RE will output data sequentially. The RANDOM DATA OUTPUT command can be issued multiple times, but limited to the current loaded page.

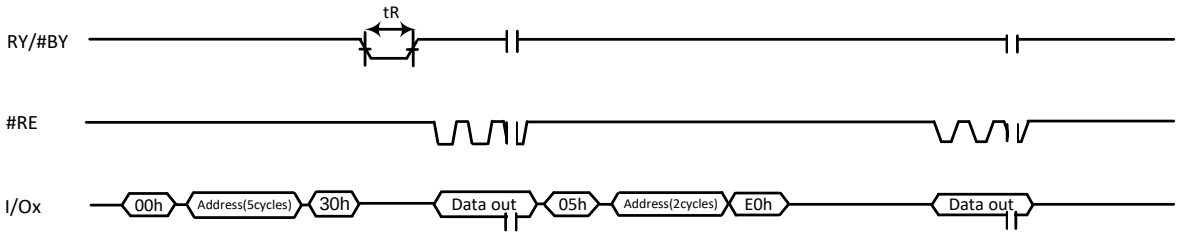

Figure 9-2 Random Data Output

9.1.3.1. TWO PLANE RANDOM DATA OUTPUT (06h-E0h)

TWO PLANE RANDOM DATA READ (06h-E0h) command can indicate to specified plane and column address on data register . This command is accepted by a device when it is ready.

Issuing 06h to the command register, two column address cycles, three row address cycles, E0h are followed, this enables data output mode on the address device's data register at the specified column address. After the E0h command , the host have to wait at least tWHR before requesting data output. The selected device is in data output mode until another valid command is issued.

The TWO PLANE RANDOM DATA READ (06h-E0h) command is used to select the data register to be enabled for data output. When the data output is complete on the selected plane, the command can be issued again to start data output on another plane.

If there is a need to update the column address without selecting a new data register, the RANDOM DATA READ (05h-E0h) command can be used instead.

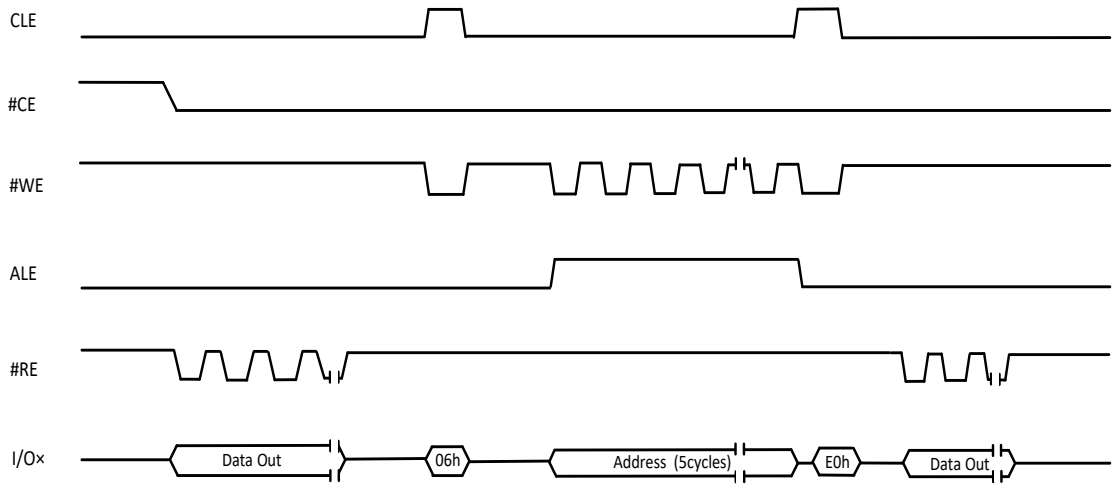

Figure 9-3 Two Plane Random Data Output

9.1.4 READ ID (90h)

READ ID command is comprised of two modes determined by the input address, device (00h) or ONFI (20h) identification information. To enter the READ ID mode, write 90h to the Command Register followed by a 00h address cycle, then toggle #RE for 5 single byte cycles, W29N02KV. The pre-programmed code includes the Manufacturer ID, Device ID, and Product-Specific Information (see Table 9.1). If the READ ID command is followed by 20h address, the output code includes 4 single byte cycles of ONFI identifying information (See Table 9.2). The device remains in the READ ID Mode until the next valid command is issued.

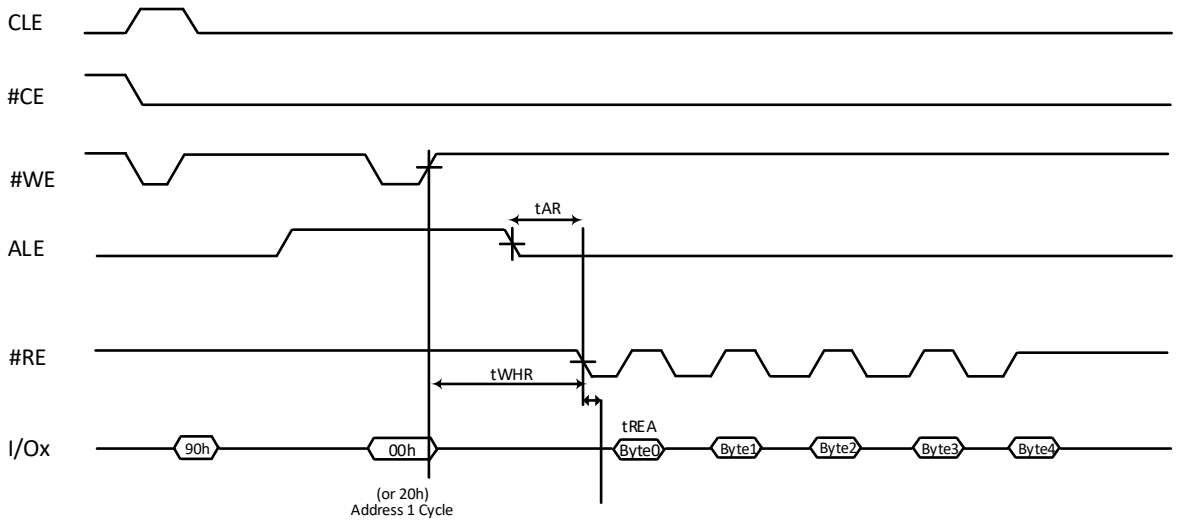

Figure 9-4 Read ID

# of Byte/Cycles	1st Byte/Cycle	2nd Byte/Cycle	3rd Byte/Cycle	4th Byte/Cycle	5th Byte/Cycle
W29N02KV	EFh	DAh	10h	95h	06h
Description	MFR ID	Device ID	Two Plane Operation Supported	Page Size: 2KB Spare Area Size:128B BLK Size w/o Spare:128KB Organized:x8 Serial Access:25ns	

Table 9-1 Device ID and Configuration Codes for Address 00h

# of Byte/Cycles	1st Byte/Cycle	2nd Byte/Cycle	3rd Byte/Cycle	4th Byte/Cycle
Code	4Fh	4Eh	46h	49h

Table 9-2 ONFI Identifying Codes for Address 20h

9.1.5 READ PARAMETER PAGE (ECh)

READ PARAMETER PAGE can read out the device's parameter data structure, such as, manufacturer information, device organization, timing parameters, key features, and other pertinent device parameters. The data structure is stored with at least three copies in the device's parameter page. Figure 9-9 shows the READ PARAMETER PAGE timing. The RANDOM DATA OUTPUT (05h-E0h) command is supported during data output.

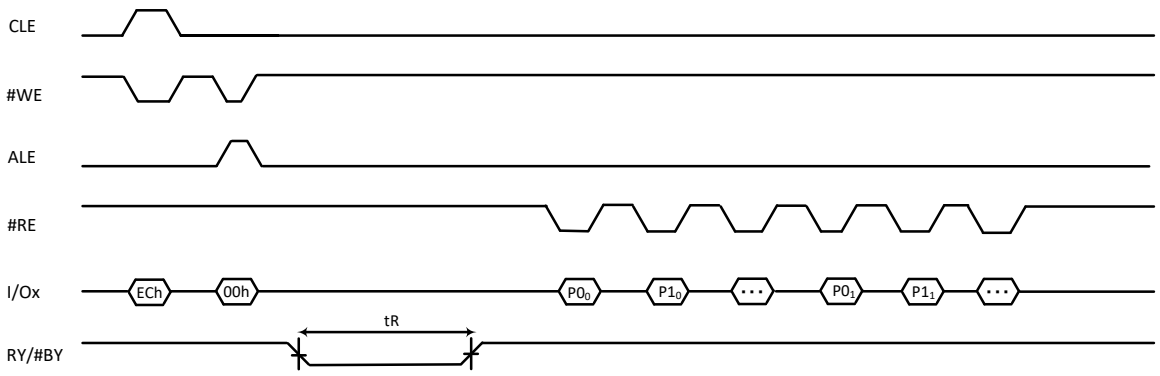

Figure 9-5 Read Parameter Page

Byte	Description		Value
0-3	Parameter page signature		4Fh, 4Eh, 46h, 49h
4-5	Revision number		02h, 00h
6-7	Features supported		18h,00h
8-9	Optional commands supported		3Ch,00h
10-31	Reserved		00h, 00h, 00h, 00h, 00h, 00h, 00h, 00h, 00h, 00h, 00h, 00h, 00h, 00h, 00h, 00h, 00h, 00h, 00h, 00h, 00h, 00h
32-43	Device manufacturer		57h, 49h, 4Eh, 42h, 4Fh, 4Eh, 44h, 20h, 20h, 20h, 20h, 20h
44-63	Device model	W29N02KV	57h,32h,39h,4Eh,30h,32h,4Bh,56h,20h,20h,20h,20h, 20h,20h,20h,20h,20h,20h,20h,20h
64	Manufacturer ID		EFh
65-66	Date code		00h, 00h
67-79	Reserved		00h, 00h, 00h, 00h, 00h, 00h, 00h, 00h, 00h, 00h, 00h, 00h, 00h
80-83	# of data bytes per page		00h, 08h, 00h, 00h
84-85	# of spare bytes per page		80h, 00h
86-89	# of data bytes per partial page		00h, 02h, 00h, 00h
90-91	# of spare bytes per partial page		20h, 00h
92-95	# of pages per block		40h, 00h, 00h, 00h
96-99	# of blocks per unit		00h, 08h, 00h, 00h
100	# of logical units		01h
101	# of address cycles		23h
102	# of bits per cell		01h
103-104	Bad blocks maximum per unit		28h, 00h
105-106	Block endurance		01h, 05h
107	Guaranteed valid blocks at beginning of target		01h
108-109	Block endurance for guaranteed valid blocks		00h, 00h
110	# of programs per page		04h
111	Partial programming attributes		00h
112	# of ECC bits		04h
113	# of interleaved address bits		01h
114	Interleaved operation attributes		00h
115-127	Reserved		00h, 00h, 00h, 00h, 00h, 00h, 00h, 00h, 00h, 00h, 00h, 00h, 00h
128	I/O pin capacitance		0Ah
129-130	Timing mode support		1Fh, 00h

Byte	Description	Value
131-132	Program cache timing	00h, 00h
133-134	Maximum page program time	BCh, 02h
135-136	Maximum block erase time	10h, 27h
137-138	Maximum random read time	19h, 00h
139-140	tCCS minimum	3Ch, 00h
141-163	Reserved	00h, 00h, 00h, 00h, 00h, 00h, 00h, 00h, 00h, 00h, 00h, 00h, 00h, 00h, 00h, 00h, 00h, 00h, 00h, 00h, 00h, 00h, 00h, 00h
164-165	Vendor specific revision #	01h,00h
166-253	Vendor specific	00h
254-255	Integrity CRC	ECh, 21h
256-511	Value of bytes 0-255	
512-767	Value of bytes 0-255	
>767	Additional redundant parameter pages	

Table 9-3 Parameter Page Output Value

9.1.6 READ STATUS (70h)

The W29N02KV has an 8-bit Status Register which can be read during device operation. Refer to Table 9.3 for specific Status Register definitions. After writing 70h command to the Command Register, read cycles will only read from the Status Register. The status can be read from I/O[7:0] outputs, as long as #CE and #RE are LOW. Note; #RE does not need to be toggled for Status Register read. The Command Register remains in status read mode until another command is issued. To change to normal read mode, issue the PAGE READ (00h) command. After the PAGE READ command is issued, data output starts from the initial column address.

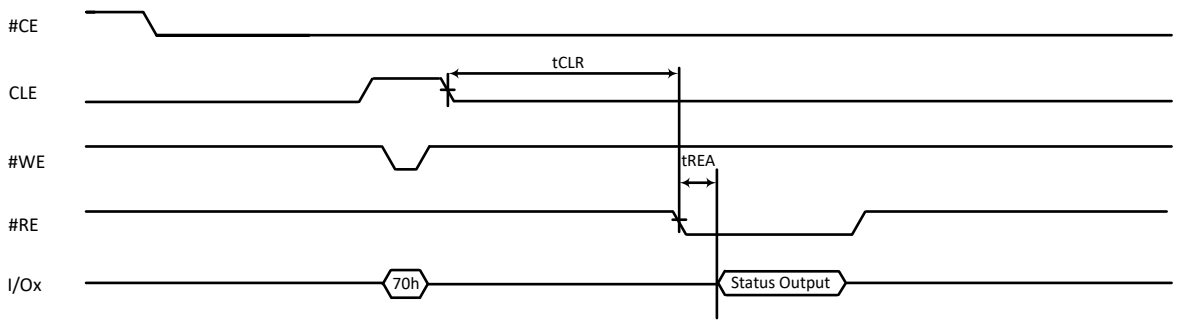

Figure 9-6 Read Status Operation

SR bit	Page Read	Page Program	Block Erase	Definition
I/O 0	Not Use	Pass/Fail	Pass/Fail	0=Successful Program/Erase 1=Error in Program/Erase
I/O 1	Not Use	Not Use	Not Use	Don't cared
I/O 2	Not Use	Not Use	Not Use	Don't cared
I/O 3	Not Use	Not Use	Not Use	Don't cared
I/O 4	Not Use	Not Use	Not Use	Don't cared
I/O 5	Not Use	Not Use	Not Use	Don't cared
I/O 6	Ready/Busy	Ready/Busy	Ready/Busy	Ready = 1 Busy = 0
I/O 7	Write Protect	Write Protect	Write Protect	Unprotected = 1 Protected = 0

Table 9-4 Status Register Bit Definition

9.1.7 READ STATUS ENHANCED (78h)

The READ STATUS ENHANCED (78h) command returns the status of the addressed plane on a target even when it is busy (SR BIT 6 = 0).

Writing 78h to the command register, followed by three row address cycles containing the page, plane and block addresses that is same as executed addresses, puts the device into read status mode. The device stays in this mode until another valid command is issued

The device status is returned when the host requests data output. The SR BIT 6 and SR bit 5 bits of the status register are shared for all planes on the device. The SR BIT 1 and SR BIT 0 (SR bit0) bits are specific to the plane specified in the row address.

The READ STATUS ENHANCED (78h) command also enables the device for data output. To begin data output following a READ operation after the device is ready (SR BIT 6 = 1), issue the READ MODE (00h) command, then begin data output. If the host needs to change the data register that will output data, use the TWO PLANE RANDOMDATA READ (06h-E0h) command after the device is ready

Use of the READ STATUS ENHANCED (78h) command is prohibited when OTP mode is enabled. It is also prohibited following some of the other reset, identification.

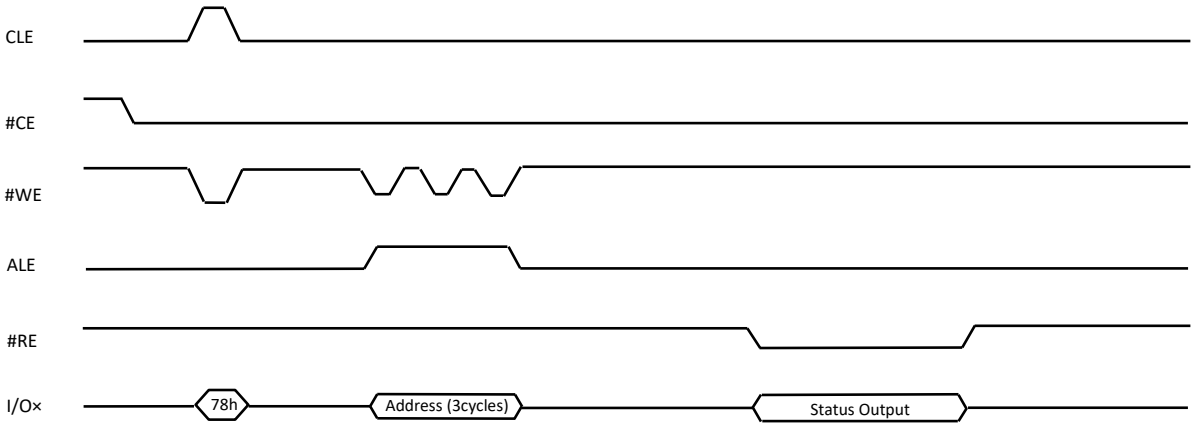

Figure 9-7 Read Status Enhanced (78h) Operation

9.1.8 READ UNIQUE ID (EDh)

The W29N02KV NAND Flash device has a method to uniquely identify each NAND Flash device by using the READ UNIQUE ID command. The format of the ID is limitless, but the ID for every NAND Flash device manufactured, will be guaranteed to be unique.

Numerous NAND controllers typically use proprietary error correction code (ECC) schemes. In these cases Winbond cannot protect unique ID data with factory programmed ECC. However, to ensure data reliability, Winbond will program the NAND Flash devices with 16 bytes of unique ID code, starting at byte 0 on the page, immediately followed by 16 bytes of the complement of that unique ID. The combination of these two actions is then repeated 16 times. This means the final copy of the unique ID will resides at location byte 511. At this point an XOR or exclusive operation can be performed on the first copy of the unique ID and its complement. If the unique ID is good, the results should yield all the bits as 1s. In the event that any of the bits are 0 after the XOR operation, the procedure can be repeated on a subsequent copy of the unique ID data.

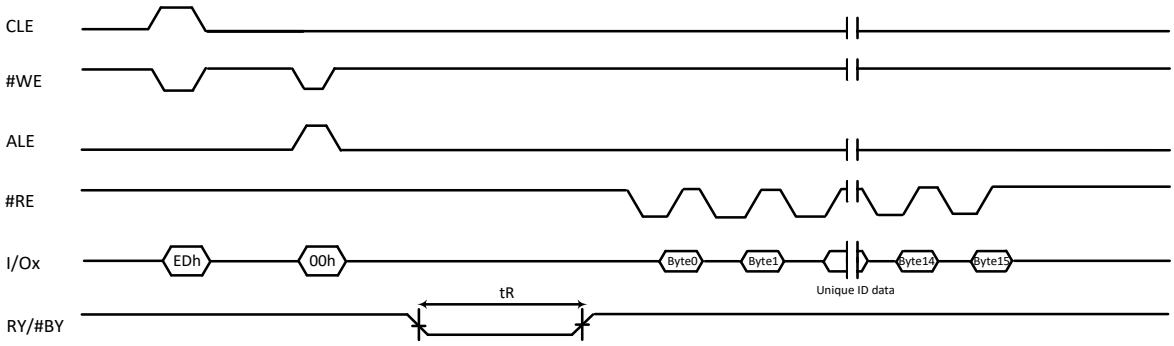

Figure 9-8 Read Unique ID

9.2 PROGRAM Operation

9.2.1 PAGE PROGRAM (80h-10h)

The W29N02KV Page Program command will program pages sequentially within a block, from the lower order page address to higher order page address. Programming pages out of sequence is prohibited. The W29N02KV supports partial-page programming operations up to 4 times before an erase is required if partitioning a page. Note; programming a single bit more than once without first erasing it is not supported.

9.2.2 SERIAL DATA INPUT (80h)

Page Program operation starts with the execution of the Serial Data Input command (80h) to the Command Register, following next by inputting five address cycles and then the data is loaded. Serial data is loaded to Data register with each #WE cycle. The Program command (10h) is written to the Command Register after the serial data input is finished. At this time the internal write state controller automatically executes the algorithms for program and verifies operations. Once the programming starts, determining the completion of the program process can be done by monitoring the RY/#BY output or the Status Register Bit 6, which will follow the RY/#BY signal. RY/#BY will stay LOW during the internal array programming operation during the period of (tPROG). During page program operation, only two commands are available, READ STATUS (70h) and RESET (FFh). When the device status goes to the ready state, Status Register Bit 0 (I/O0) indicates whether the program operation passed (Bit0=0) or failed (Bit0=1), (see Figure 9-13). The Command Register remains in read status mode until the next command is issued.

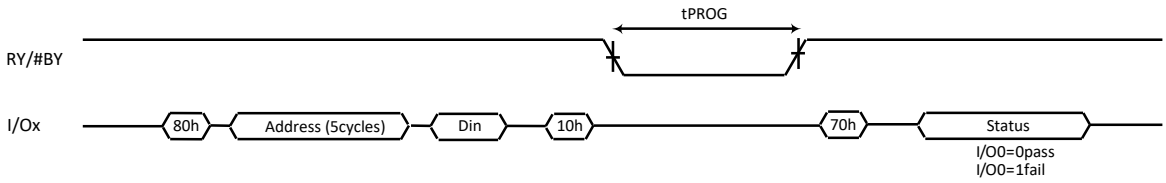

Figure 9-9 Page Program

9.2.3 RANDOM DATA INPUT (85h)

After the Page Program (80h) execution of the initial data has been loaded into the Data register, if the need for additional writing of data is required, using the RANDOM DATA INPUT (85h) command can perform this function to a new column address prior to the Program (10h) command. The RANDOM DATA INPUT command can be issued multiple times in the same page (See Figure 9-14).

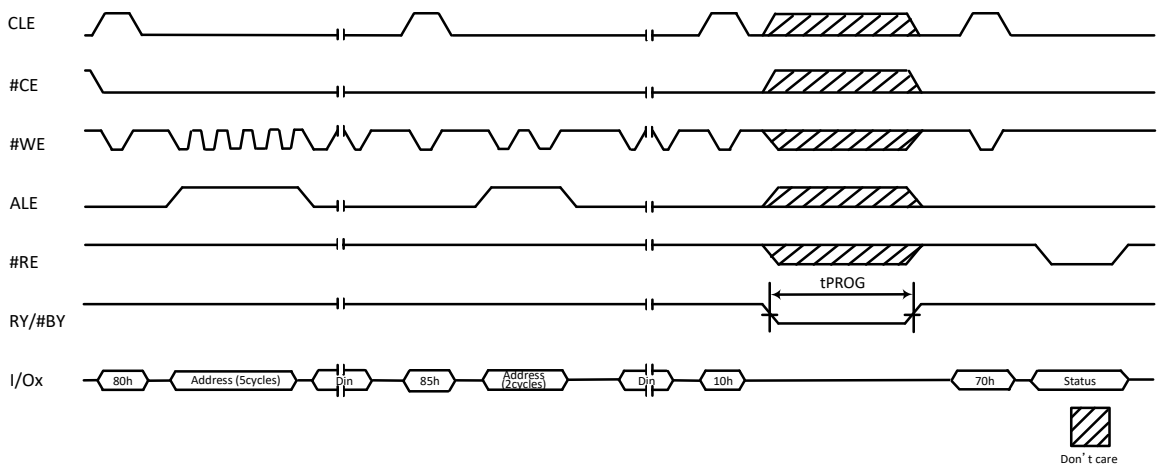

Figure 9-10 Random Data Input

9.2.4 TWO PLANE PAGE PROGRAM

TWO PLANE PAGE PROGRAM command make it possible for host to input data to the addressed plane's data register and queue the data register to be moved to the NAND Flash array.

This command can be issued several times. Each time a new plane address is specified that plane is also queued for data transfer. To input data for the final plane and to begin the program operation for all previously queued planes, the PAGE PROGRAM command have to be issued. All of the queued planes will move the data to the NAND Flash array. when it is ready (SR BIT 6 = 1),this command is accepted.

At the block and page address is specified, input a page to the data register and queue it to be moved to the NAND Flash array ,the 80h is issued to the command register. Unless this command has been preceded by a TWO PLANE PAGE PROGRAM command, issuing the 80h to the command register clears all of the data registers' contents on the selected target. Write five address cycles containing the column address and row address; data input cycles follow. Serial data is input beginning at the column address specified. At any time, while the data input cycle, the RANDOM DATA INPUT (85h) command can be issued. When data input is complete, write 11h to the command register. The device will go busy (SR BIT 6 = 0, SR BIT 5 = 0) for tDBSY.

To ascertain the progress of tDBSY, the host can monitor the target's RY/#BY signal or, the status operations (70h, 78h) can be used alternatively. When the device status shows that it is ready (SR BIT 6 = 1), additional TWO PLANE PAGE PROGRAM commands can be issued to queue additional planes for data transfer, then, the PAGE PROGRAM command can be issued.

When the PAGE PROGRAM command is used as the final command of a two plane program operation, data is transferred from the data registers to the NAND Flash array for all of the addressed planes during tPROG. When the device is ready (SR BIT 6 = 1, SR BIT 5 = 1), the host should check the status of the SR BIT 0 for each of the planes to verify that programming completed successfully.

When system issues TWO PLANE PAGE PROGRAM and PAGE PROGRAM commands, READ STATUS (70h) command can confirm whether the operation(s) passed or failed. If the status after READ STATUS (70h) command indicates an error (SR BIT 0 = 1 and/or SR BIT 1 = 1), READ STATUS ENHANCED (78h) command can be determined which plane is failed.

TWO PLANE PROGRAM commands require five-cycle addresses, one address indicates the operational plane. These addresses are subject to the following requirements:

• The column address bits must be valid address for each plane

• The plane select bit, A18, must be set to “L” for 1st address input, and set to “H” for 2nd address input.

• The page address (A17-A12) and block address (A28-A19) of first input are don’t care. It follows secondary inputted page address and block address.

Two plane operations must be same type operation across the planes; for example, it is not possible to perform a PROGRAM operation on one plane with an ERASE operation on another.

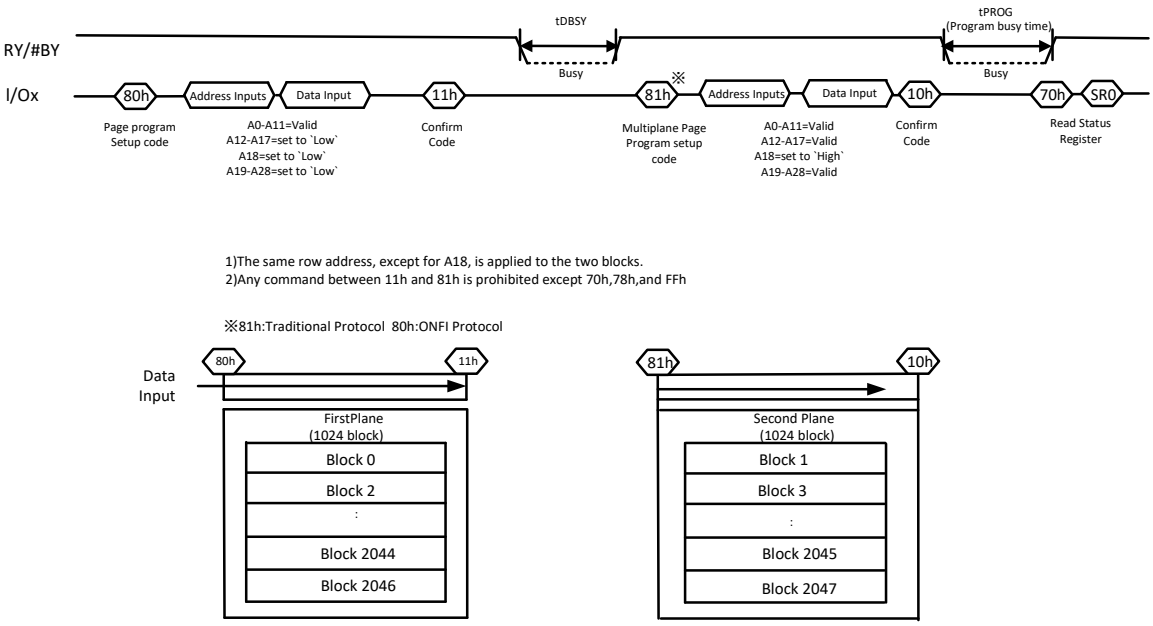

Figure 9-11 Two Plane Page Program

9.3 COPY BACK Operation

Copy Back operations require two command sets. Issue a READ for COPY BACK (00h-35h) command first, then the PROGRAM for COPY BACK (85h-10h) command. Copy back operations are only supported within a same plane.

9.3.1 READ for COPY BACK (00h-35h)

The READ for COPY BACK command is used together with the PROGRAM for COPY BACK (85h-10h) command. To start execution, READ for COPY BACK (00h) command is written to the Command Register, followed by the five cycles of the source page address. To start the transfer of the selected page data from the memory array to the Data register, write the 35h command to the Command Register.

After execution of the READ for COPY BACK command sequence and RY/#BY returns to HIGH marking the completion of the operation, the transferred data from the source page into the Data register may be read out by toggling #RE. Data is output sequentially from the column address that was originally specified with the READ for COPY BACK command. RANDOM DATA OUTPUT (05h-E0h) commands can be issued multiple times without any limitation after READ for COPY BACK command has been executed (see Figures 9-19 and 9-20).

At this point the device is in ready state to accept the PROGRAM for COPY BACK command.

9.3.2 PROGRAM for COPY BACK (85h-10h)

After the READ for COPY BACK command operation has been completed and RY/#BY goes HIGH, the PROGRAM for COPY BACK command can be written to the Command Register. The command results in the transfer of data from the Data register to the Data Register, then internal operations start programming of the new destination page. The sequence would be, write 85h to the Command Register, followed by the five cycle destination page address to the NAND array. Next write the 10h command to the Command Register; this will signal the internal controller to automatically start to program the data to new destination page. During this programming time, RY/#BY will LOW. The READ STATUS command can be used instead of the RY/#BY signal to determine when the program is complete. When Status Register Bit 6 (I/O6) equals to “1”, Status Register Bit 0 (I/O0) will indicate if the operation was successful or not.

The RANDOM DATA INPUT (85h) command can be used during the PROGRAM for COPY BACK command for modifying the original data. Once the data is copied into the Data register using the READ for COPY BACK (00h-35h) command, follow by writing the RANDOM DATA INPUT (85h) command, along with the address of the data to be changed. The data to be changed is placed on the external data pins. This operation copies the data into the Data register. Once the 10h command is written to the Command Register, the original data and the modified data are transferred to the Data Register, and programming of the new page commences. The RANDOM DATA INPUT command can be issued numerous times without limitation, as necessary before starting the programming sequence with 10h command.

Since COPY BACK operations do not use external memory and the data of source page might include a bit errors, a competent ECC scheme should be developed to check the data before programming data to a new destination page.

9.3.3 TWO PLANE READ for COPY BACK

To improve read through rate, TWO PLANE READ for COPY BACK operation is copied data concurrently from one or two plane to the specified data registers.

TWO PLANE PROGRAM for COPY BACK command can move the data in two pages from the data registers to different pages. This operation improves system performance than PROGRAM for COPY BACK operation.

9.3.4 TWO PLANE PROGRAM for COPY BACK

Function of TWO PLANE PROGRAM for COPY BACK command is equal to TWO-PLANE PAGE PROGRAM command, except that when 85h is written to the command register, then data register contents are not cleared. Refer to TWO-PLANE PAGE PROGRAM for more details features.

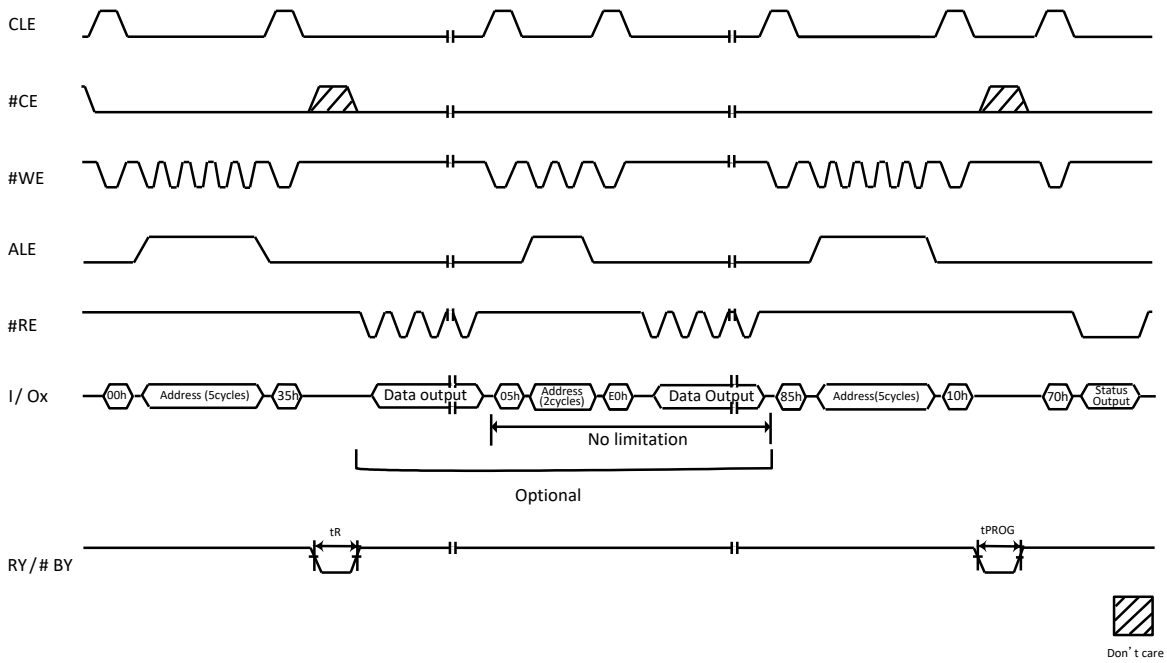

Figure 9-12 Program for copy back Operation

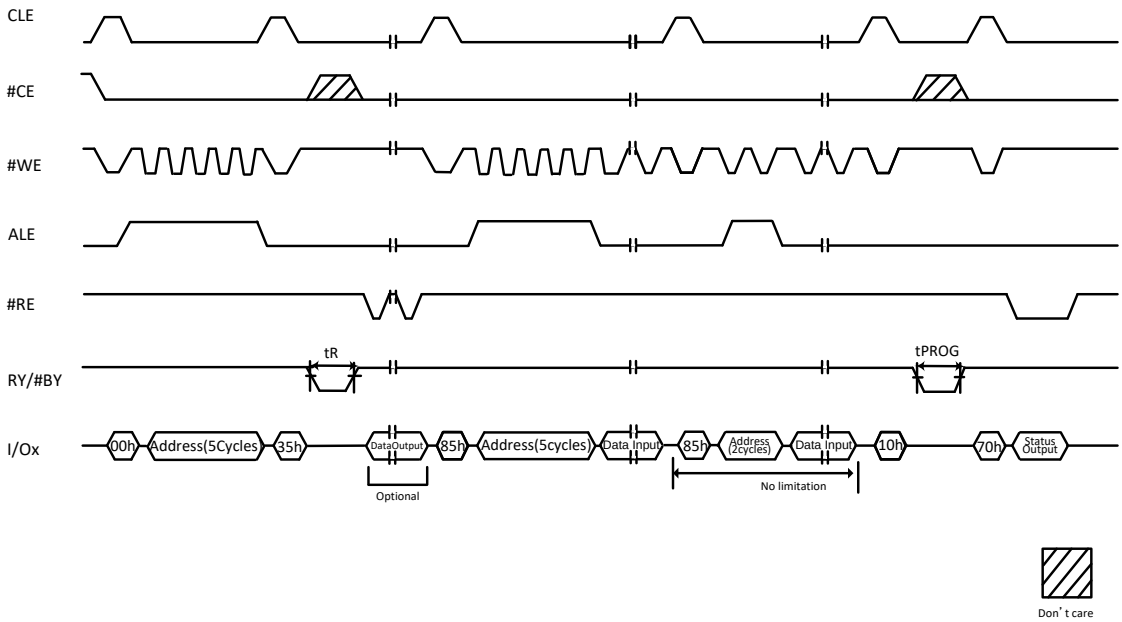

Figure 9-13 Copy Back Operation with Random Data Input

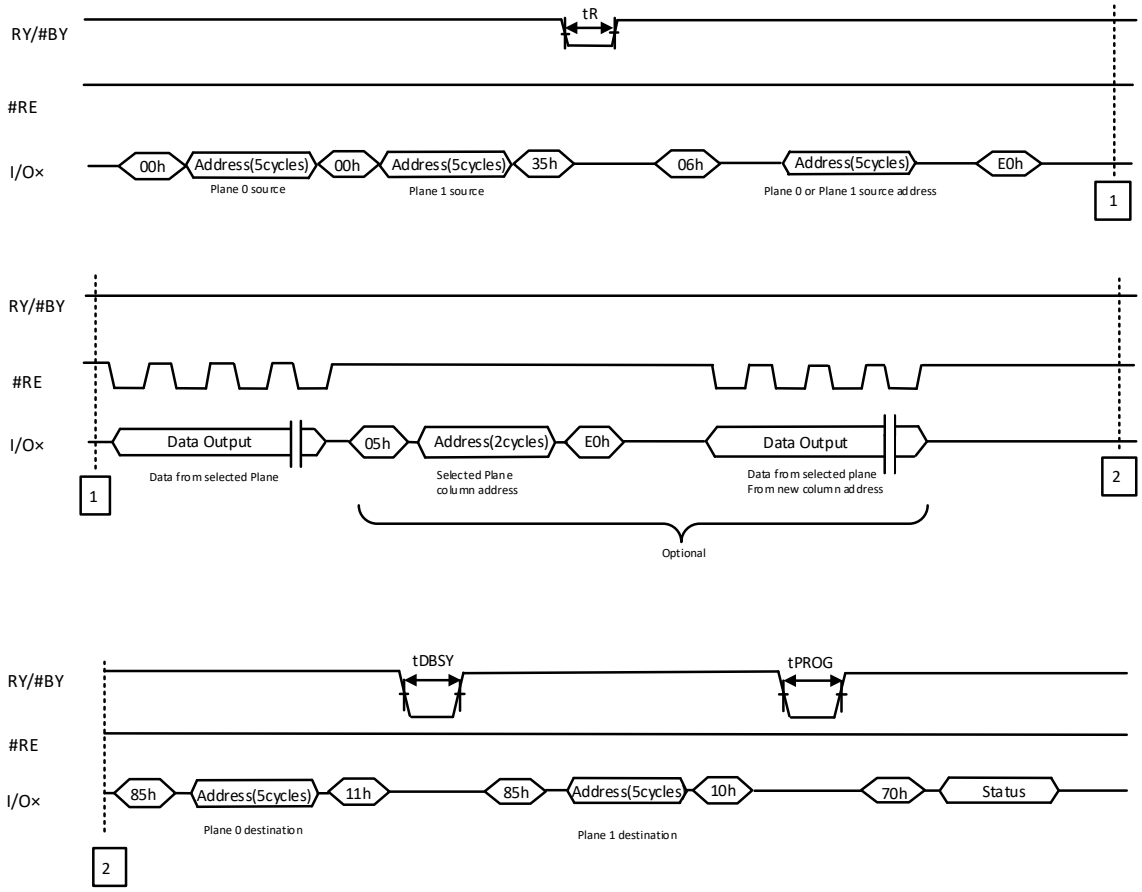

Figure 9-14 Two Plane Copy Back

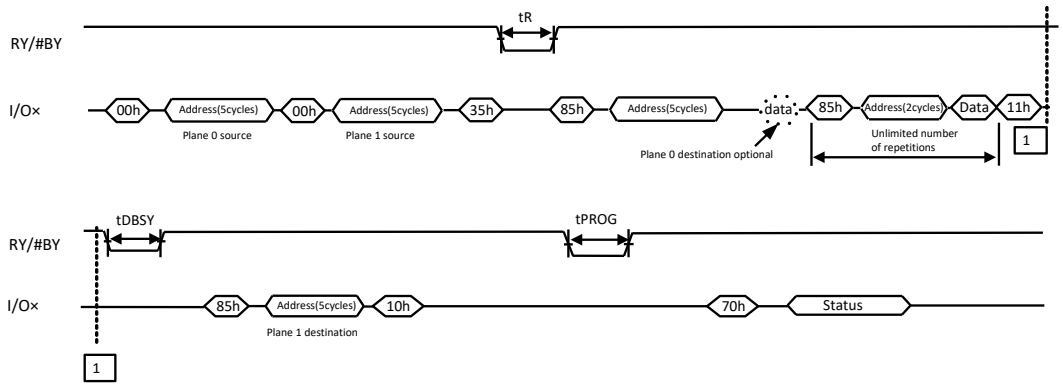

Figure 9-15 Two Plane Copy Back with Random Data Input

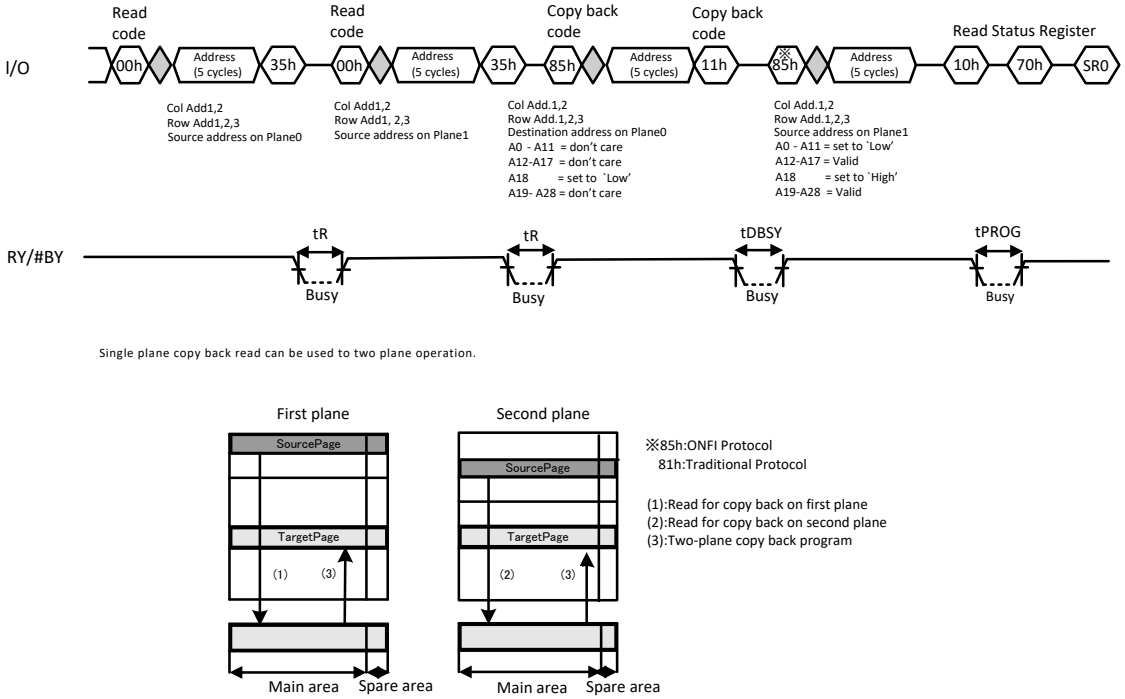

Figure 9-16 Two Plane Program for Copy Back

9.4 BLOCK ERASE Operation

9.4.1 BLOCK ERASE (60h-D0h)

Erase operations happen at the architectural block unit. This W29N02KV has 2048 erase blocks. Each block is organized into 64 pages (x8:2176 bytes/page, x16:1088 words/page), 132K bytes (x8:128K + 8K bytes, x16:64 K+ 4Kwords)/block. The BLOCK ERASE command operates on a block by block basis.

Erase Setup command (60h) is written to the Command Register. Next, the three cycle block address is written to the device. The page address bits are loaded during address block address cycle, but are ignored. The Erase Confirm command (D0h) is written to the Command Register at the rising edge of #WE, RY/#BY goes LOW and the internal controller automatically handles the block erase sequence of operation. RY/#BY goes LOW during Block Erase internal operations for a period of tBERS,

The READ STATUS (70h) command can be used for confirm block erase status. When Status Register Bit6 (I/O6) becomes to “1”, block erase operation is finished. Status Register Bit0 (I/O0) will indicate a pass/fail condition (see Figure 9-24).

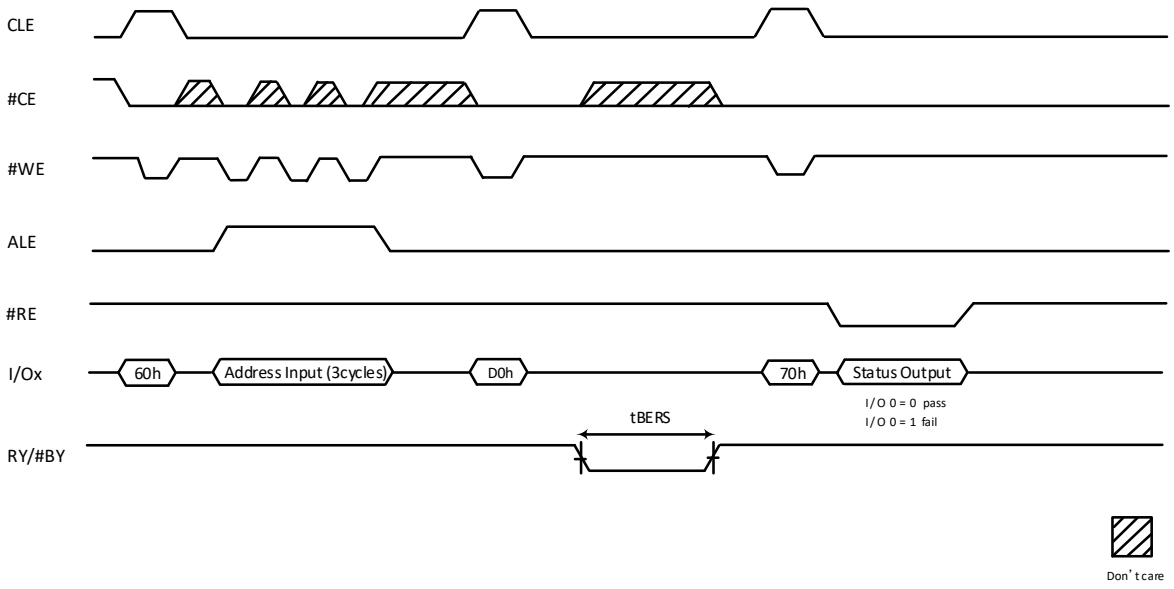

Figure 9-17 Block Erase Operation

9.4.2 TWO PLANE BLOCK ERASE

TWO PLANE BLOCK ERASE (60h-D1h) command indicates two blocks in the specified plane that is to be erased. To start ERASE operation for indicated blocks in the specified plane, write the BLOCK ERASE (60h-D0h) command.

To indicate a block to be erased, writing 60h to the command register, then, write three address cycles containing the row address, the page address is ignored. By writing D1h command to command register, the device will go busy (SR BIT 6 = 0, SR BIT 5 = 0) for tDBSY.

To confirm busy status during tDBSY, the host can monitor RY/#BY signal. Instead, system can use READ STATUS (70h) or READ STATUS ENHANCED (78h) commands. When the status shows ready (SR BIT 6 = 1, SR BIT 5 = 1), additional TWO PLANE BLOCK ERASE commands can be issued for erasing two blocks in a specified plane.

When system issues TWO PLANE BLOCK ERASE (60h-D1h), and BLOCK ERASE (60h-D0h) commands, READ STATUS (70h) command can confirm whether the operation(s) passed or failed. If the status after READ STATUS (70h) command indicates an error (SR BIT 0 = 1), READ STATUS ENHANCED (78h) command can be determined which plane is failed.

TWO PLANE BLOCK ERASE commands require three cycles of row addresses; one address indicates the operational plane. These addresses are subject to the following requirements:

• The plane select bit, A18, must be different for each issued address.

• Block address (A28-A19) of first input is don't care. It follows secondary inputted block address.

Two plane operations must be same type operation across the planes; for example, it is not possible to perform a PROGRAM operation on one plane with an ERASE operation on another.

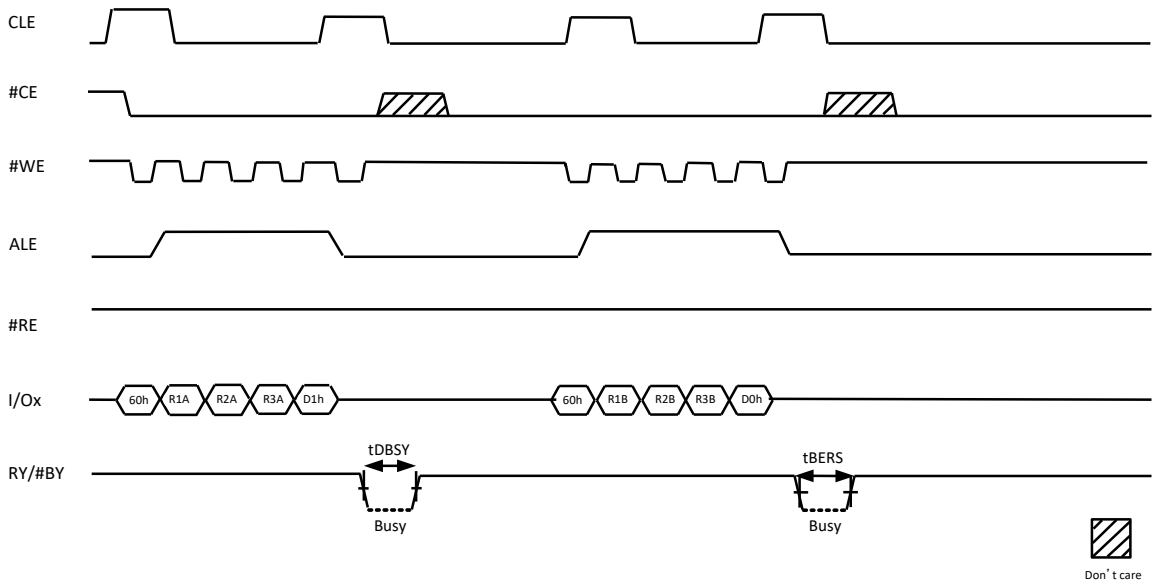

Figure 9-18 Two Plane Block Erase Operation

9.5 RESET Operation

9.5.1 RESET (FFh)

READ, PROGRAM, and ERASE commands can be aborted by the RESET (FFh) command during the time the W29N02KV is in the busy state. The Reset operation puts the device into known status. The data that is processed in either the programming or erasing operations are no longer valid. This means the data can be partially programmed or erased and therefore data is invalid. The Command Register is cleared and is ready to accept next command. The Data Register and Data register contents are marked invalid.

The Status Register indicates a value of E0h when #WP is HIGH; otherwise a value of 60h is written when #WP is LOW. After RESET command is written to the command register, RY/#BY goes LOW for a period of tRST (see Figure 9-20).

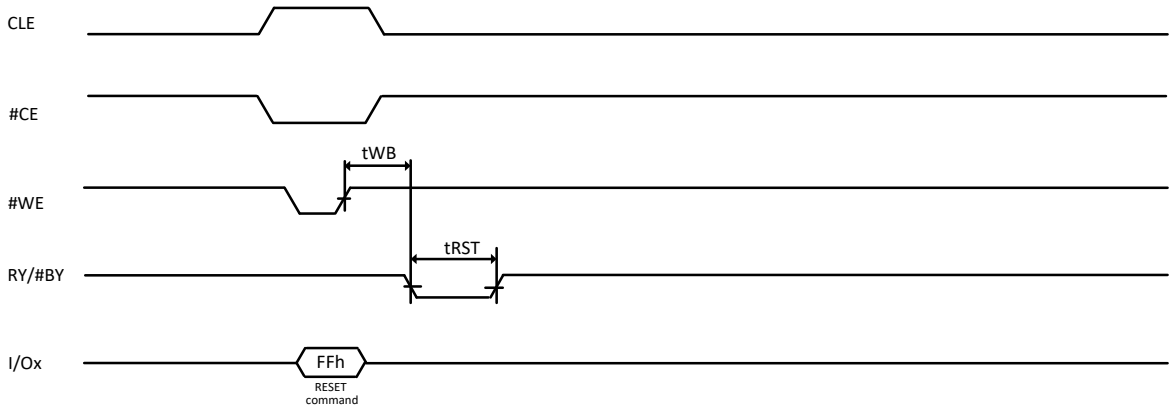

Figure 9-19 Reset Operation

9.6 FEATURE OPERATION

The GET FEATURES (EEh) and SET FEATURES (EFh) commands are used to change the NAND Flash device behavior from the default power on settings. These commands use a one-byte feature address to determine which feature is to be read or modified. A range of 0 to 255 defines all features; each is described in the features table (see Table 9.5 thru 9.7). The GET FEATURES (EEh) command reads 4-Byte parameter in the features table (See GET FEATURES function). The SET FEATURES (EFh) command places the 4-Byte parameter in the features table (See SET FEATURES function).

When a feature is set, meaning it remains active by default until the device is powered off. The set feature remains the set even if a RESET (FFh) command is issued.

Feature address	Description
00h	N.A
02h-7Fh	Reserved
80h	Vendor specific parameter : Programmable I/O drive strength
81h	Vendor specific parameter : Programmable RY/#BY pull-down strength
82h-FFh	Reserved

Table 9-5 Features

Feature Address 80h: Programmable I/O Drive Strength

Sub feature parameter	Options	I/O7	I/O6	I/O5	I/O4	I/O3	I/O2	I/O1	I/O0	Value	Notes
P1											
I/O drive strength	Full (default)	Reserved (0)						0	0	00h	1
	Three-quarters	Reserved (0)						0	1	01h	
	One-half	Reserved (0)						1	0	02h	
	One-quarter	Reserved (0)						1	1	03h	
P2											
		Reserved (0)								00h	
P3											
		Reserved (0)								00h	
P4											
		Reserved (0)								00h	

Table 9-6 Feature Address 80h

Note:

1. **The default drive strength setting is Full strength. The Programmable I/O Drive Strength mode is used to change from the default I/O drive strength. Drive strength should be selected based on expected loading of the memory bus. This table shows the four supported output drive-strength settings. The device returns to the default drive strength mode when a power cycle has occurred. AC timing parameters may need to be relaxed if I/O drive strength is not set to full.**

Feature Address 81h: Programmable RY/#BY Pull-down Strength

Sub feature parameter	Options	I/O7	I/O6	I/O5	I/O4	I/O3	I/O2	I/O1	I/O0	Value	Notes
P1											
RY/#BY pull-down strength	Full (default)	Reserved (0)						0	0	00h	1
	Three-quarters	Reserved (0)						0	1	01h	
	One-half	Reserved (0)						1	0	02h	
	One-quarter	Reserved (0)						1	1	03h	
P2											
		Reserved (0)								00h	
P3											
		Reserved (0)								00h	
P4											
		Reserved (0)								00h	

Table 9-7 Feature Address 81h

Note:

1. **The default programmable RY/#BY pull-down strength is set to Full strength. The pull-down strength is used to change the RY/#BY pull-down strength. RY/#BY pull-down strength should be selected based on expected loading of RY/#BY. The four supported pull-down strength settings are shown. The device returns to the default pull-down strength when a power cycle has occurred.**

9.6.1 GET FEATURES (EEh)

The GET FEATURES command returns the device feature settings including those previously set by the SET FEATURES command. To use the Get Feature mode write the command (EEh) to the Command Register followed by the single cycle byte Feature Address. RY/#BY will goes LOW for the period of tFEAT. If Read Status (70h) command is issued for monitoring the process completion status, Read Command (00h) has to be executed to re-establish data output mode. Once, RY/#BY goes HIGH, the device feature settings can be read by toggling #RE. The device remains in Feature Mode until another valid command is issued to Command Register. See Figure 9-21.

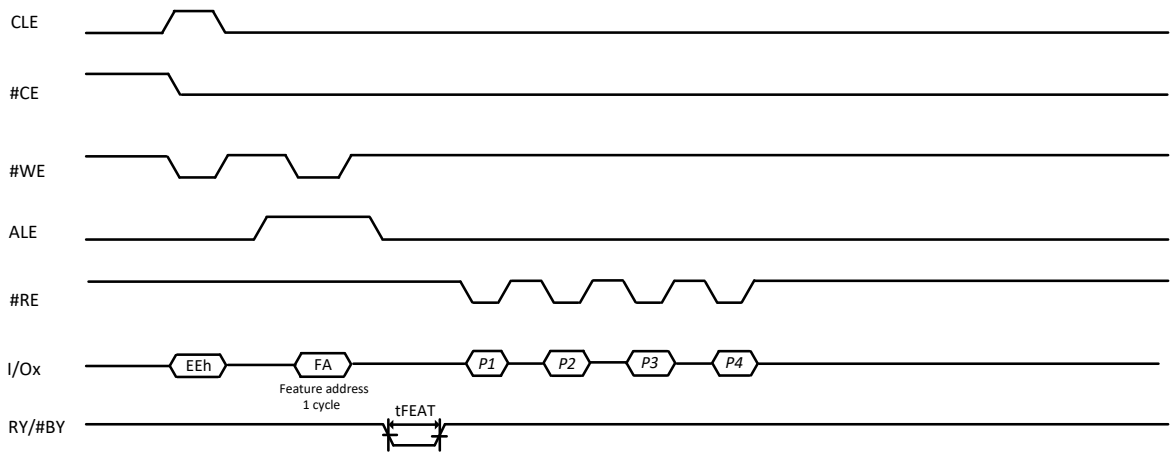

Figure 9-20 Get Feature Operation

9.6.2 SET FEATURES (EFh)

The SET FEATURES command sets the behavior parameters by selecting a specified feature address. To change device behavioral parameters, execute Set Feature command by writing EFh to the Command Register, followed by the single cycle feature address. Each feature parameter (P1-P4) is latched at the rising edge of each #WE. The RY/#BY signal will go LOW during the period of tFEAT while the four feature parameters are stored. The Read Status (70h) command can be issued for monitoring the progress status of this operation. The parameters are stored in device until the device goes through a power on cycle. The device remains in feature mode until another valid command is issued to Command Register.

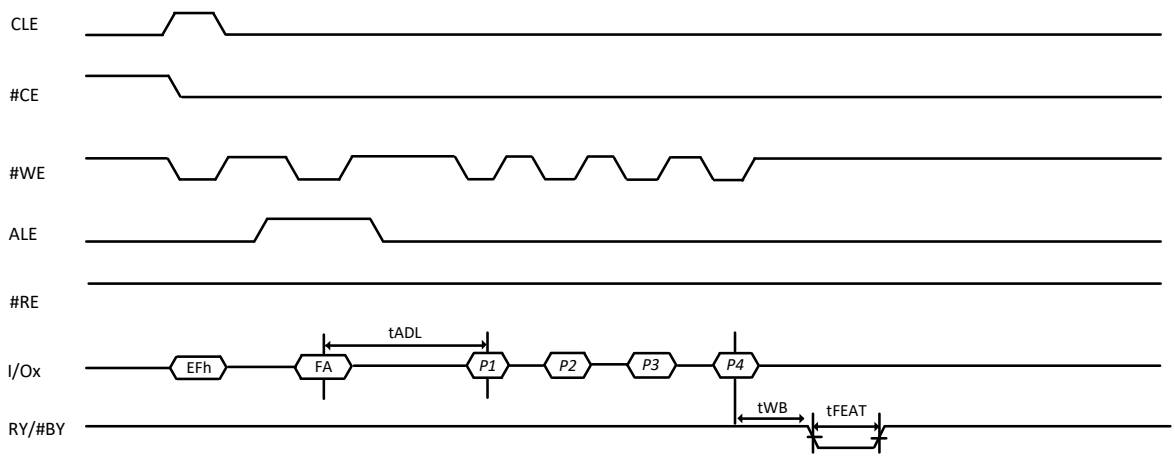

Figure 9-21 Set Feature Operation

9.7 ONE TIME PROGRAMMABLE (OTP) Area

The device has One-Time Programmable (OTP) memory area comprised of a number of pages (2176 bytes/page) (1088words/page). This entire range of pages is functionally guaranteed. Only the OTP commands can access the OTP area. When the device ships from Winbond, the OTP area is in an erase state (all bits equal “1”). The OTP area cannot be erased, therefore protecting the area only prevent further programming. Contact to Winbond for using this feature.

9.8 WRITE PROTECT

#WP pin can enable or disable program and erase commands preventing or allowing program and erase operations. Figure 9-29 to 9-34 shows the enabling or disabling timing with #WP setup time (tWW) that is from rising or falling edge of #WP to latch the first commands. After first command is latched, #WP pin must not toggle until the command operation is complete and the device is in the ready state. (Status Register Bit5 (I/O5) equal 1)

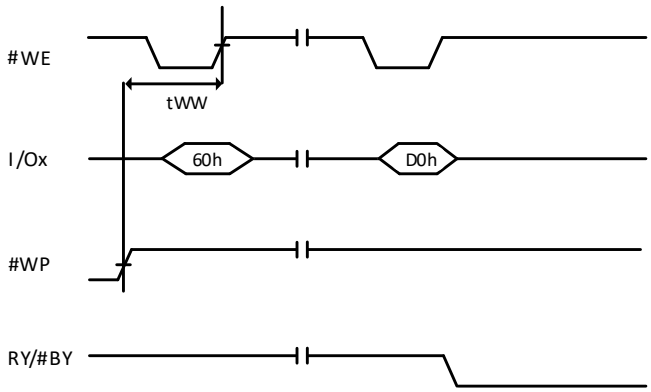

Figure 9-22 Erase Enable

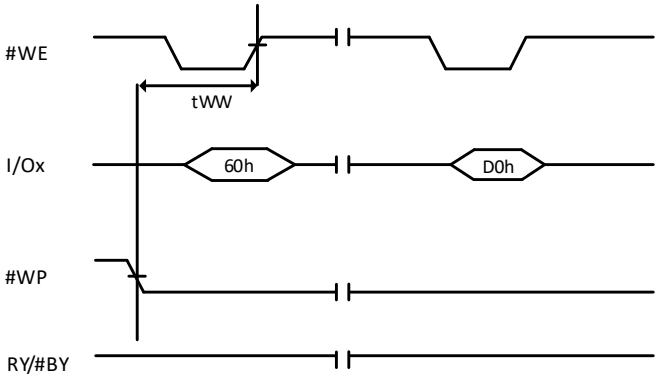

Figure 9-23 Erase Disable

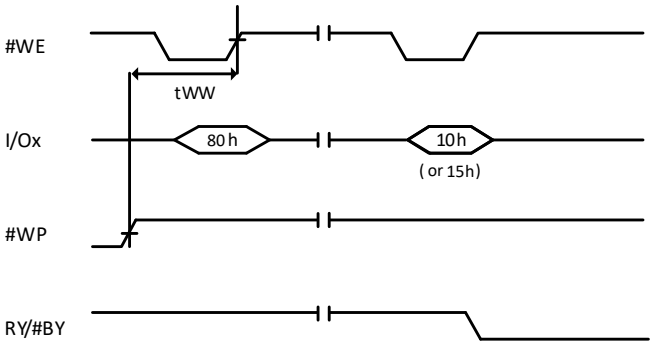

Figure 9-24 Program Enable

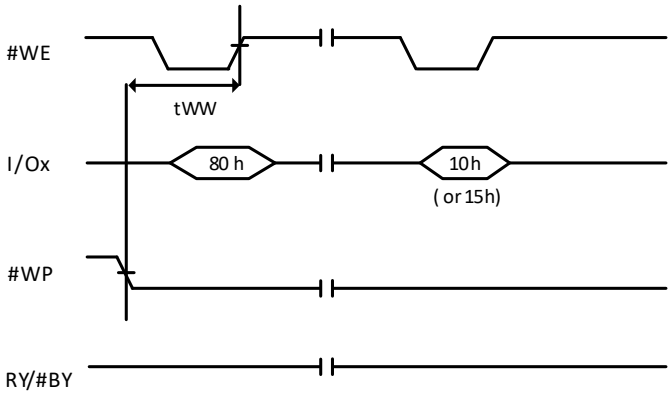

Figure 9-25 Program Disable

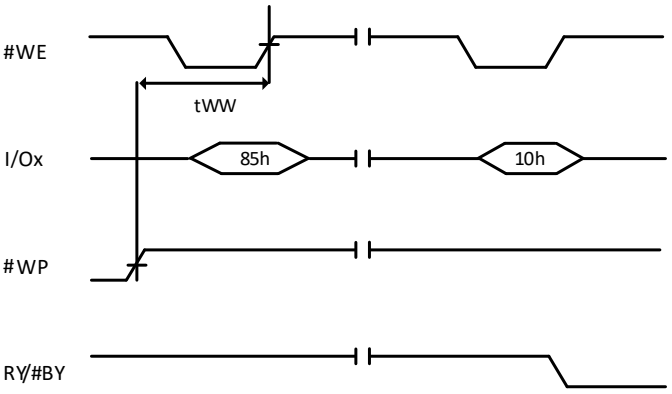

Figure 9-26 Program for Copy Back Enable

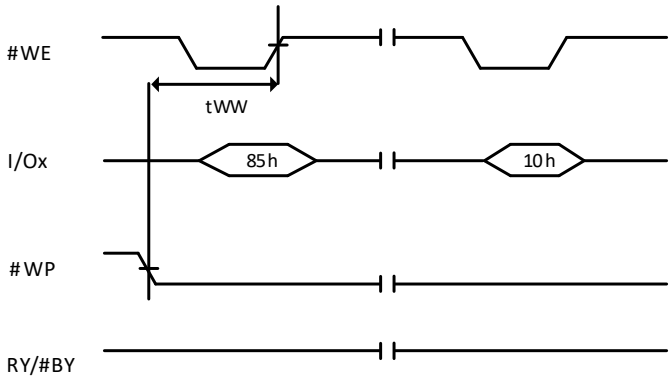

Figure 9-27 Program for Copy Back Disable

9.9 BLOCK LOCK

The device has block lock feature that can protect the entire device or user can indicate a ranges of blocks from program and erase operations. Using this feature offers increased functionality and flexibility data protection to prevent unexpected program and erase operations. Contact to Winbond for using this feature.

10. ELECTRICAL CHARACTERISTICS

10.1 Absolute Maximum Ratings (3.3V)

PARAMETERS	SYMBOL	CONDITIONS	RANGE	UNIT
Supply Voltage	VCC		–0.6 to +4.6	V
Voltage Applied to Any Pin	V_{IN}	Relative to Ground	–0.6 to +4.6	V
Storage Temperature	T_{STG}		–65 to +150	°C
Short circuit output current, I/Os			5	mA

Table 10-1 Absolute Maximum Ratings

Notes:

1. **Minimum DC voltage is -0.6V on input/output pins. During transitions, this level may undershoot to -2.0V for periods <30ns.**
2. **Maximum DC voltage on input/output pins is Vcc+0.3V which, during transitions, may overshoot to Vcc+2.0V for periods <20ns.**
3. **This device has been designed and tested for the specified operation ranges. Proper operation outside of these levels is not guaranteed. Exposure to absolute maximum ratings may affect device reliability. Exposure beyond absolute maximum ratings may cause permanent damage.**

10.2 Operating Ranges (3.3V)

PARAMETER	SYMBOL	CONDITIONS	SPEC		UNIT
			MIN	MAX	
Supply Voltage	VCC		2.7	3.6	V
Ambient Temperature, Operating	T_A	Industrial	-40	+85	°C

Table 10-2 Operating Ranges

10.3 Device Power-up Timing

The device is designed to avoid unexpected program/erase operations during power transitions. When the device is powered on, an internal voltage detector disables all functions whenever Vcc is below about 2V at 3V device. Write Protect (#WP) pin provides hardware protection and is recommended to be kept at VIL during power up and power down. A recovery time of minimum 1ms is required before internal circuit gets ready for any command sequences (See Figure 10-1).

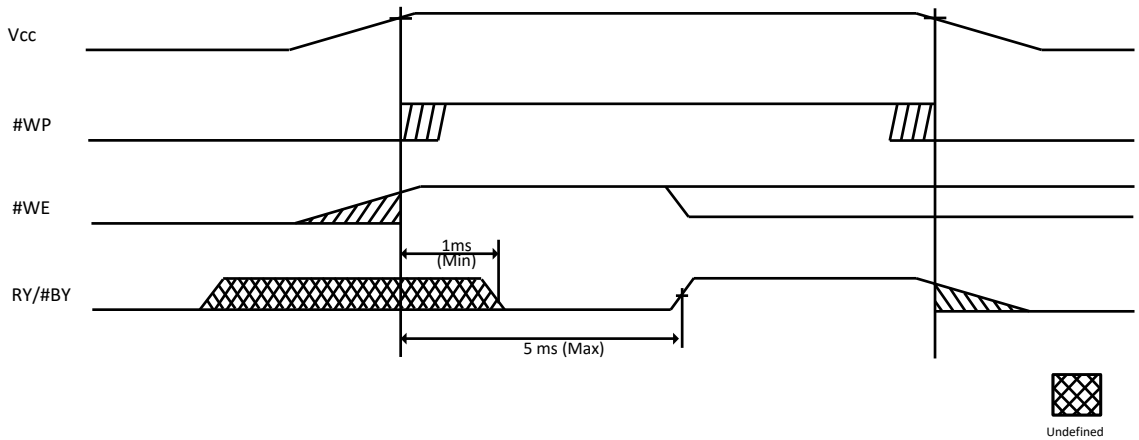

Figure 10-1 Power ON/OFF Sequence

10.4 DC Electrical Characteristics (3.3V)

PARAMETER	SYMBOL	CONDITIONS	SPEC			UNIT
			MIN	TYP	MAX	

Sequential Read current	Icc1	tRC= tRC MIN
		#CE=VIL
		IOUT=0mA
			-	25	35	mA

Program current	Icc2	-	-	25	35	mA
Erase current	Icc3	-	-	25	35	mA
Standby current (TTL)	ISB1	#CE=VIH #WP=0V/Vcc	-	-	1	mA
Standby current (CMOS)	ISB2	#CE=Vcc – 0.2V #WP=0V/Vcc	-	10	50	µA
Input leakage current	ILI	VIN= 0 V to Vcc	-	-	±10	µA
Output leakage current	ILO	VOUT=0V to Vcc	-	-	±10	µA
Input high voltage	VIH	I/O7~0, #CE,#WE,#RE, #WP,CLE,ALE	0.8 x Vcc	-	Vcc + 0.3	V
Input low voltage	VIL	-	-0.3	-	0.2 x Vcc	V
Output high voltage(1)	VOH	IOH=-400µA	2.4	-	-	V
Output low voltage(1)	VOL	IOL=2.1mA	-	-	0.4	V
Output low current	IOL(RY/#BY)	VOL=0.4V	8	10		mA

Table 10-3 DC Electrical Characteristics

Note:

1. **VOH and VOL may need to be relaxed if I/O drive strength is not set to full.**
2. **IOL (RY/#BY) may need to be relaxed if RY/#BY pull-down strength is not set to full**

10.5 AC Measurement Conditions (3.3V)

PARAMETER	SYMBOL	SPEC		UNIT
		MIN	MAX	
Input Capacitance(1), (2)	CIN	-	10	pF
Input/Output Capacitance(1), (2)	CIO	-	10	pF
Input Rise and Fall Times	TR/TF	-	5	ns
Input Pulse Voltages	-	0 to VCC		V
Input/Output timing Voltage	-	Vcc/2		V
Output load (1)	CL	1TTL GATE and CL=30pF		-

Table 10-4 AC Measurement Conditions

Notes:

1. **Verified on device characterization , not 100% tested**
2. **Test conditions TA=25'C, f=1MHz, VIN=0V**

10.6 AC Timing Characteristics for Command, Address and Data Input (3.3V)

PARAMETER	SYMBOL	SPEC		UNIT
		MIN	MAX	
ALE to Data Loading Time	tADL	70	-	ns
ALE Hold Time	tALH	5	-	ns
ALE setup Time	tALS	10	-	ns
#CE Hold Time	tCH	5	-	ns
CLE Hold Time	tCLH	5	-	ns
CLE setup Time	tCLS	10	-	ns
#CE setup Time	tCS	15	-	ns
Data Hold Time	tDH	5	-	ns
Data setup Time	tDS	10	-	ns
Write Cycle Time	tWC	25	-	ns
#WE High Hold Time	tWH	10	-	ns
#WE Pulse Width	tWP	12	-	ns
#WP setup Time	tWW	100	-	ns

Table 10-5 AC Timing Characteristics for Command, Address and Data Input

Note:

1. **tADL is the time from the #WE rising edge of final address cycle to the #WE rising edge of first data cycle.**

10.7 AC Timing Characteristics for Operation (3.3V)

PARAMETER	SYMBOL	SPEC		UNIT
		MIN	MAX	
ALE to #RE Delay	tAR	10	-	ns
#CE Access Time	tCEA	-	25	ns
#CE HIGH to Output High-Z(1)	tCHZ	-	30	ns
CLE to #RE Delay	tCLR	10	-	ns
#CE HIGH to Output Hold	tCOH	15	-	ns
Output High-Z to #RE LOW	tIR	0	-	ns
Data Transfer from Cell to Data Register	tR	-	25	µs
READ Cycle Time	tRC	25	-	ns
#RE Access Time	tREA	-	20	ns
#RE HIGH Hold Time	tREH	10	-	ns
#RE HIGH to Output Hold	tRHOH	15	-	ns
#RE HIGH to #WE LOW	tRHW	100	-	ns
#RE HIGH to Output High-Z(1)	tRHZ	-	100	ns
#RE LOW to output hold	tRLOH	5	-	ns
#RE Pulse Width	tRP	12	-	ns
Ready to #RE LOW	tRR	20	-	ns
Reset Time (READ/PROGRAM/ERASE)(2)	tRST	-	5/10/500	µs
#WE HIGH to Busy(3)	tWB	-	100	ns
#WE HIGH to #RE LOW	tWHR	60	-	ns

Table 10-6 AC Timing Characteristics for Operation

Notes: AC characteristics may need to be relaxed if I/O drive strength is not set to "full."

1. **Transition is measured ±200mV from steady-state voltage with load. This parameter is sampled and not 100 % tested.**
2. **Do not issue new command during tWB, even if RY/#BY is ready.**

10.8 Program and Erase Characteristics

PARAMETER	SYMBOL	SPEC		UNIT
		TYP	MAX	
Number of partial page programs	NoP	-	4	cycles
Page Program time	tPROG	250	700	µs
Busy Time for SET FEATURES /GET FEATURES	tFEAT	-	1	µs
Busy Time for program/erase at locked block	tLBSY	-	3	µs
Busy Time for OTP program when OTP is protected	tOBSY	-	30	µs
Block Erase Time	tBERS	2	10	ms
Busy Time for Two Plane page program and Two Plane Block Erase	tDBSY	0.5	1	µs

Table 10-7 Program and Erase Characteristics

Note:

1. **tCBSY maximum time depends on timing between internal program complete and data-in.**

11. TIMING DIAGRAMS

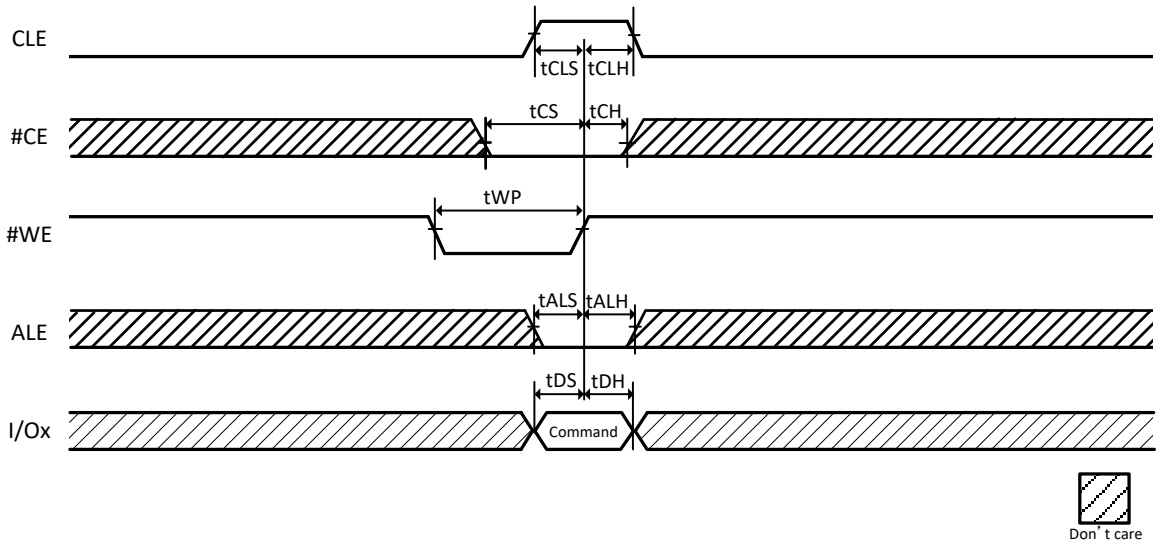

Figure 11-1 Command Latch Cycle

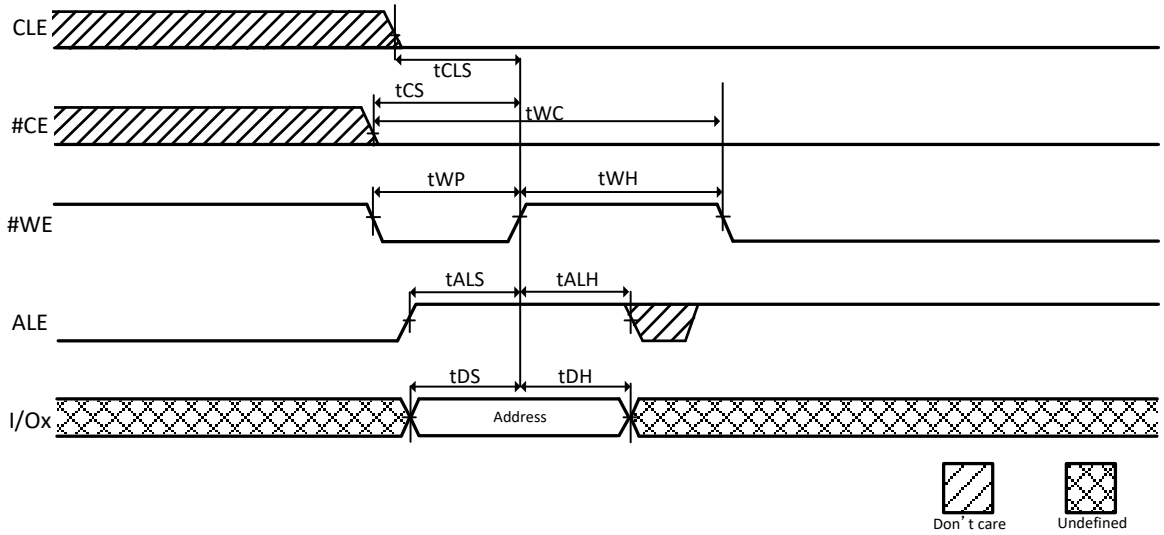

Figure 11-2 Address Latch Cycle

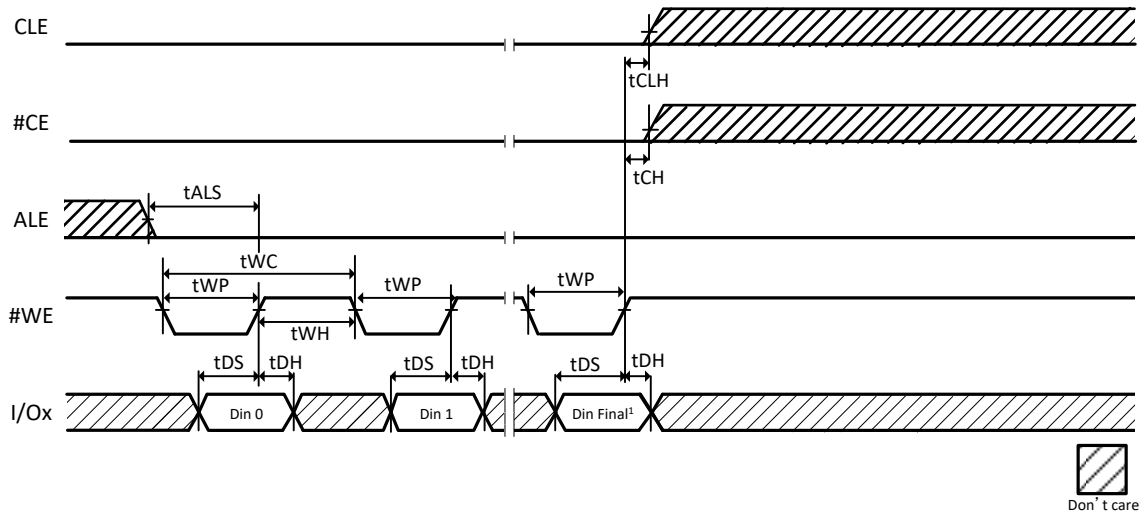

Figure 11-3 Data Latch Cycle

Note:

1. **Din Final = 2,175(x8)**

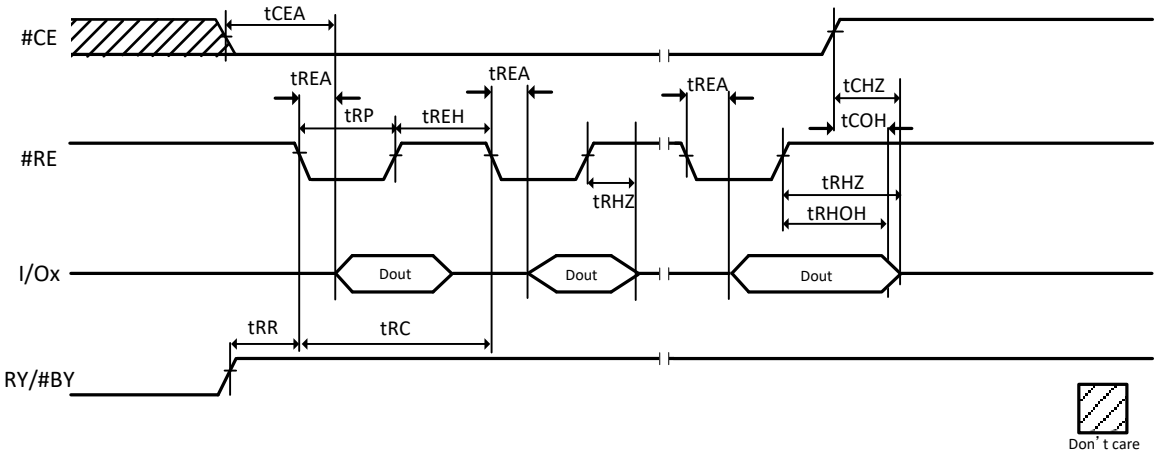

Figure 11-4 Serial Access Cycle after Read

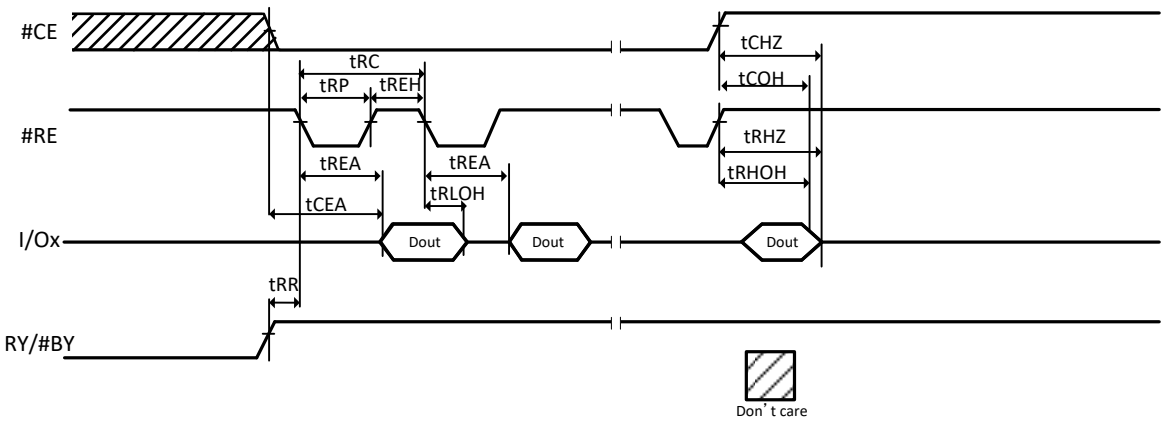

Figure 11-5 Serial Access Cycle after Read (EDO)

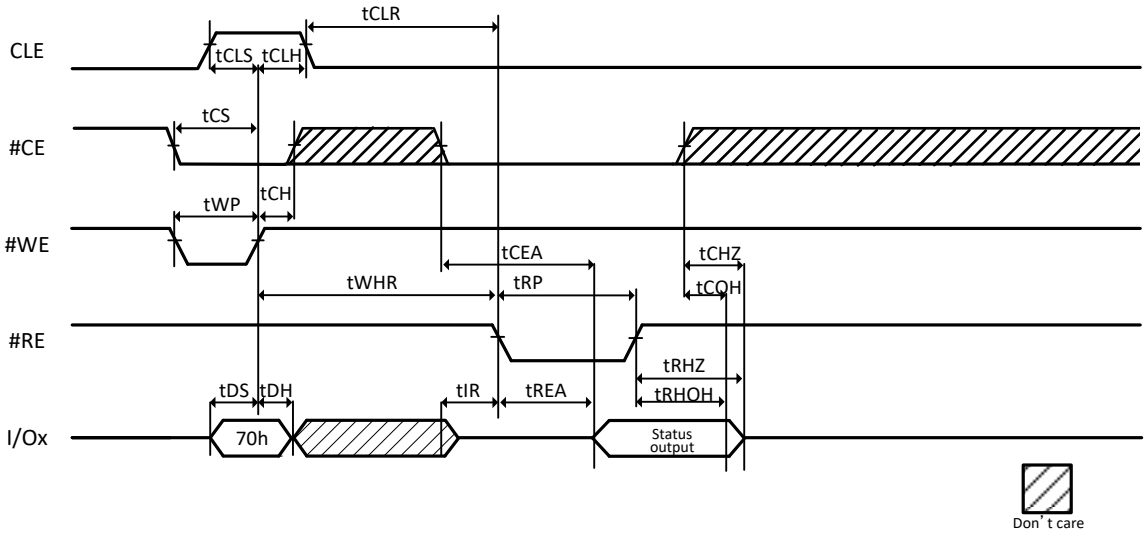

Figure 11-6 Read Status Operation

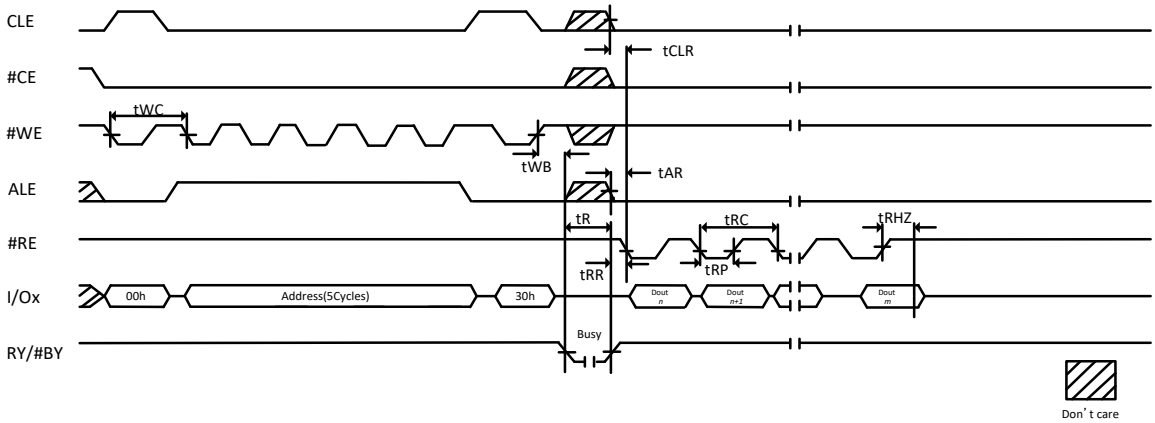

Figure 11-7 Page Read Operation

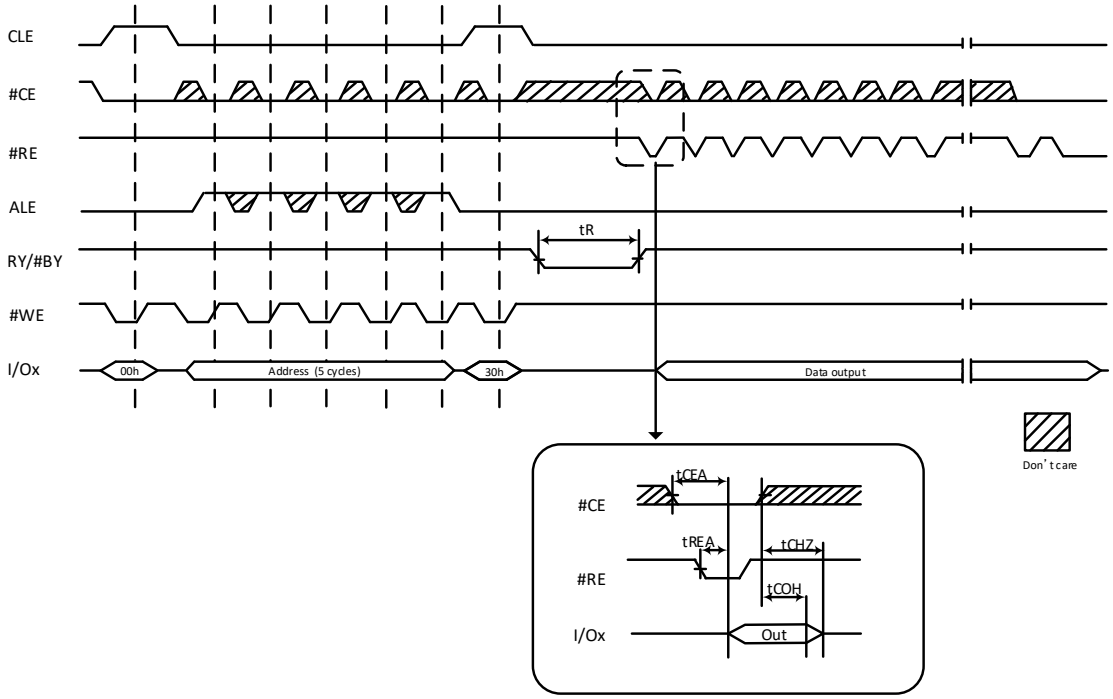

Figure 11-8 #CE Don't Care Read Operation

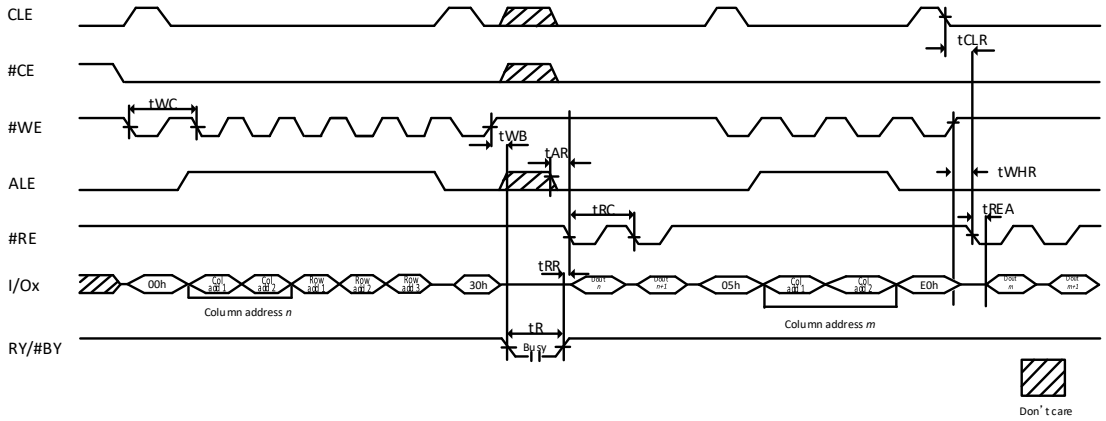

Figure 11-9 Random Data Output Operation

Note:

1. **See Table 9.1 for actual value.**

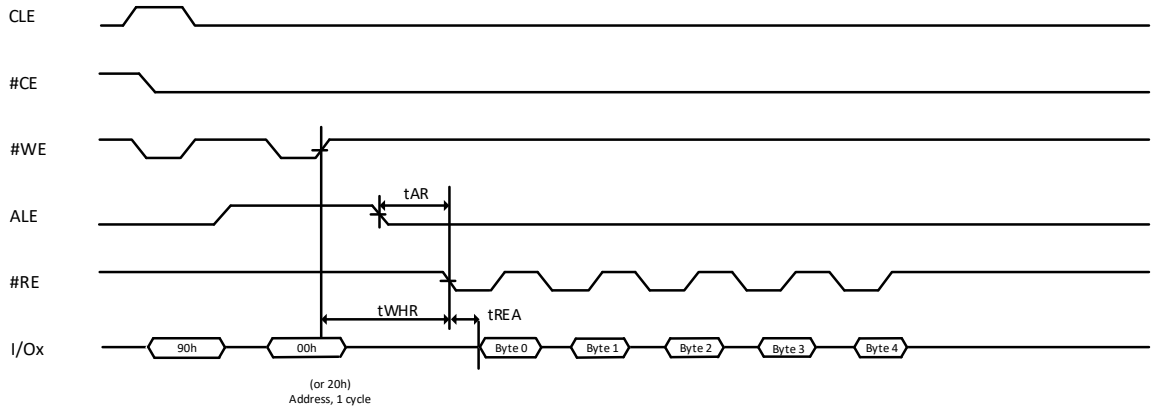

Figure 11-10 Read ID

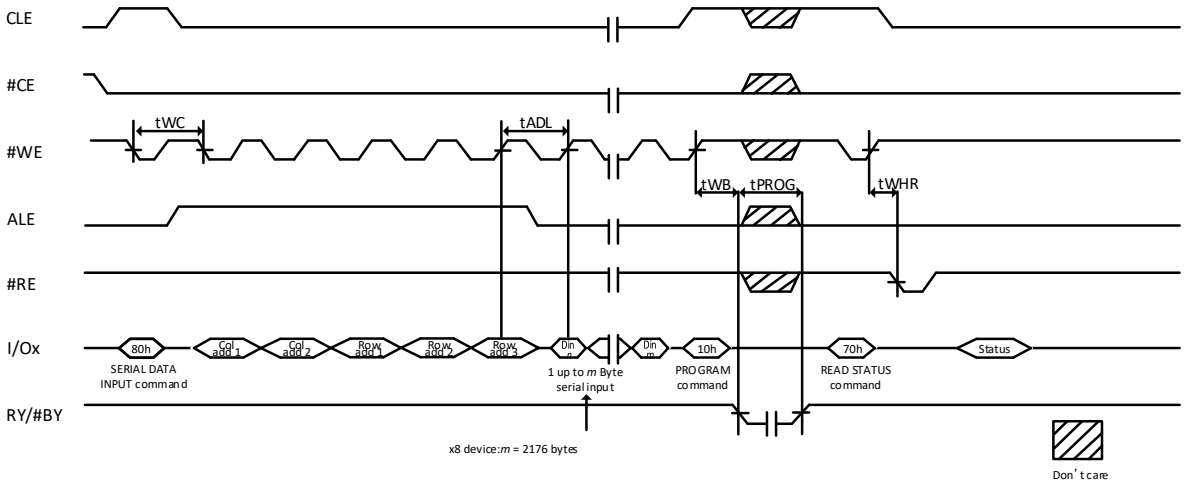

Figure 11-11 Page Program

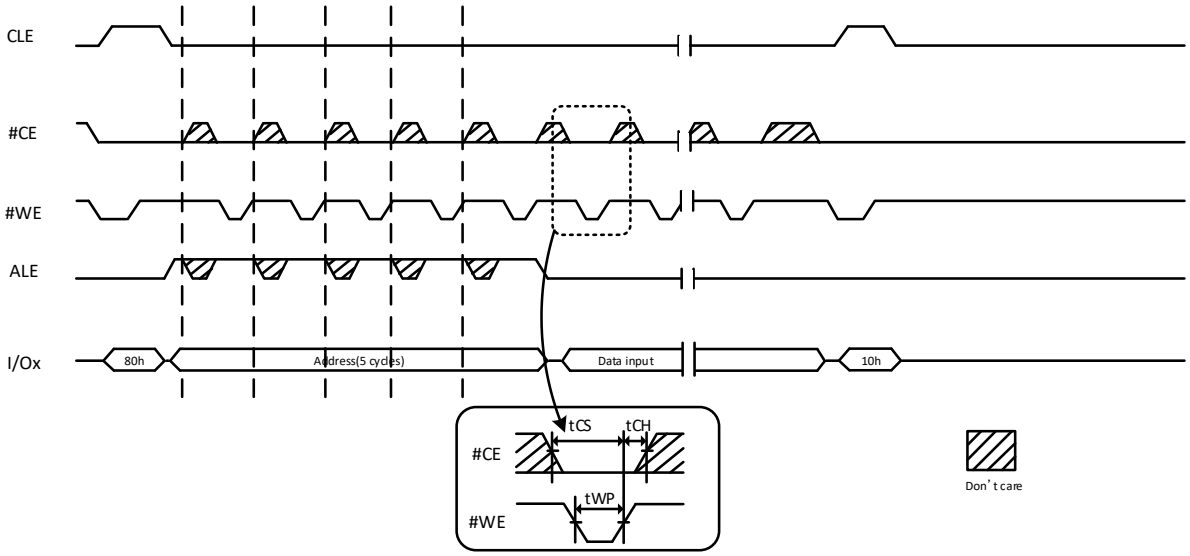

Figure 11-12 #CE Don't Care Page Program Operation

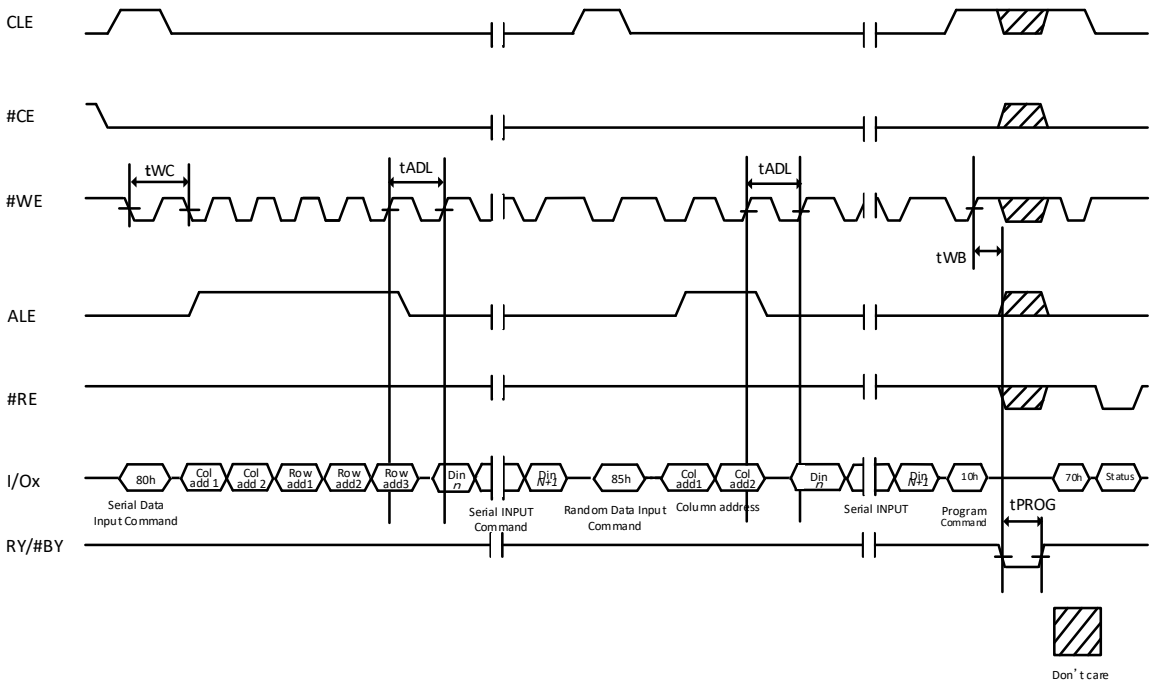

Figure 11-13 Page Program with Random Data Input

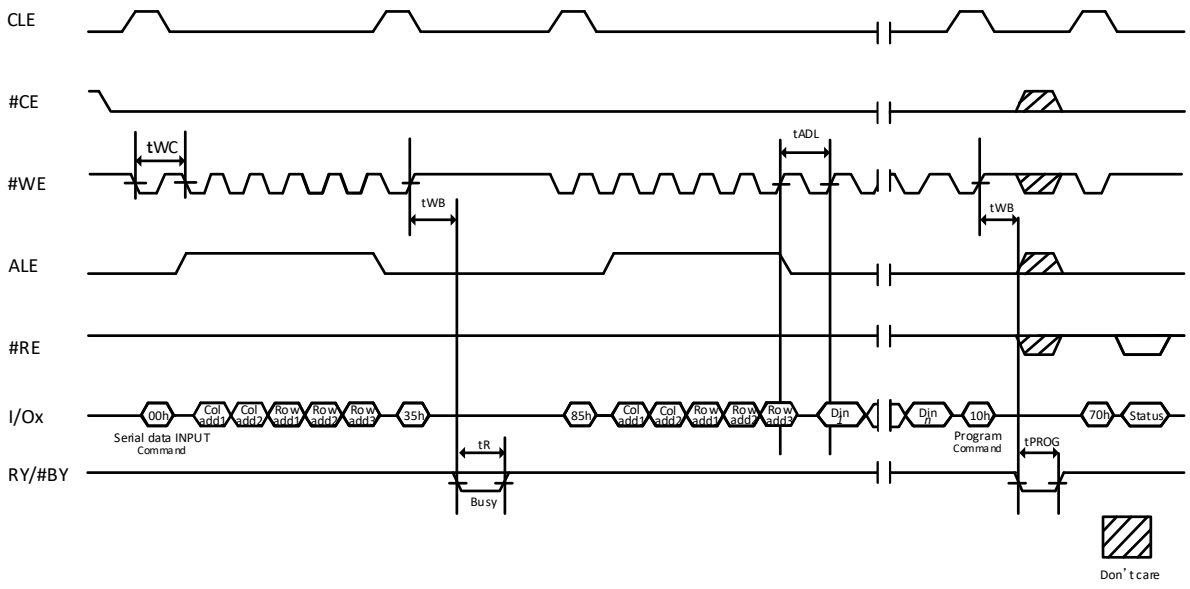

Figure 11-14 Copy Back

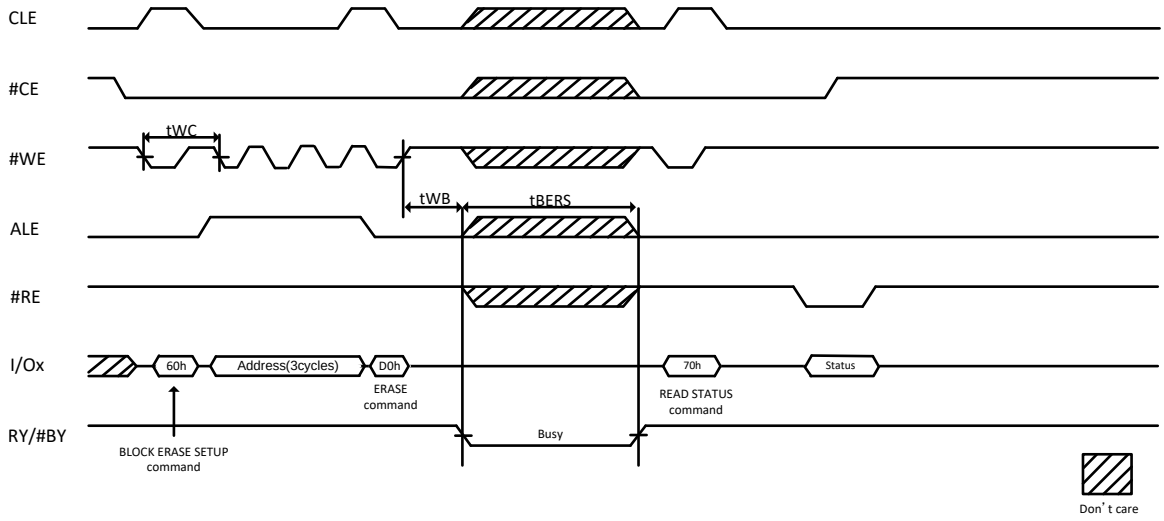

Figure 11-15 Block Erase

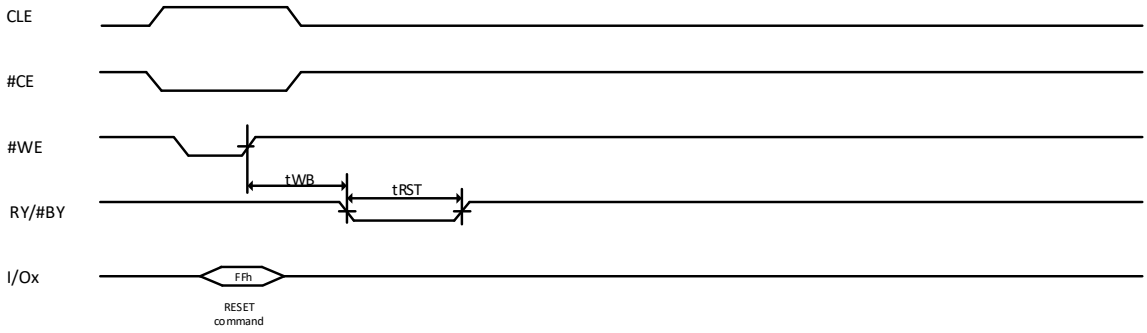

Figure 11-16 Reset

12. INVALID BLOCK MANAGEMENT

12.1 Invalid Blocks

The W29N02KV may have initial invalid blocks when it ships from factory. Also, additional invalid blocks may develop during the use of the device. Nvb represents the minimum number of valid blocks in the total number of available blocks (See Table 12.1). An invalid block is defined as blocks that contain one or more bad bits. Block 0, block address 00h is guaranteed to be a valid block at the time of shipment.

Parameter	Symbol	Min	Max	Unit
Valid block number	Nvb	2008	2048	blocks

Table 12-1 Valid Block Number

12.2 Initial Invalid Blocks

Initial invalid blocks are defined as blocks that contain one or more invalid bits when shipped from factory.

Although the device contains initial invalid blocks, a valid block of the device is of the same quality and reliability as all valid blocks in the device with reference to AC and DC specifications. The W29N02KV has internal circuits to isolate each block from other blocks and therefore, the invalid blocks will not affect the performance of the entire device.

Before the device is shipped from the factory, it will be erased and invalid blocks are permanently marked. The mark information cannot be erased. All initial invalid blocks are marked with non-FFh at the first byte of spare area on the 1st or 2nd page. It should be checked for invalid blocks by reading the marked locations, and create a table of initial invalid blocks as following flow chart.

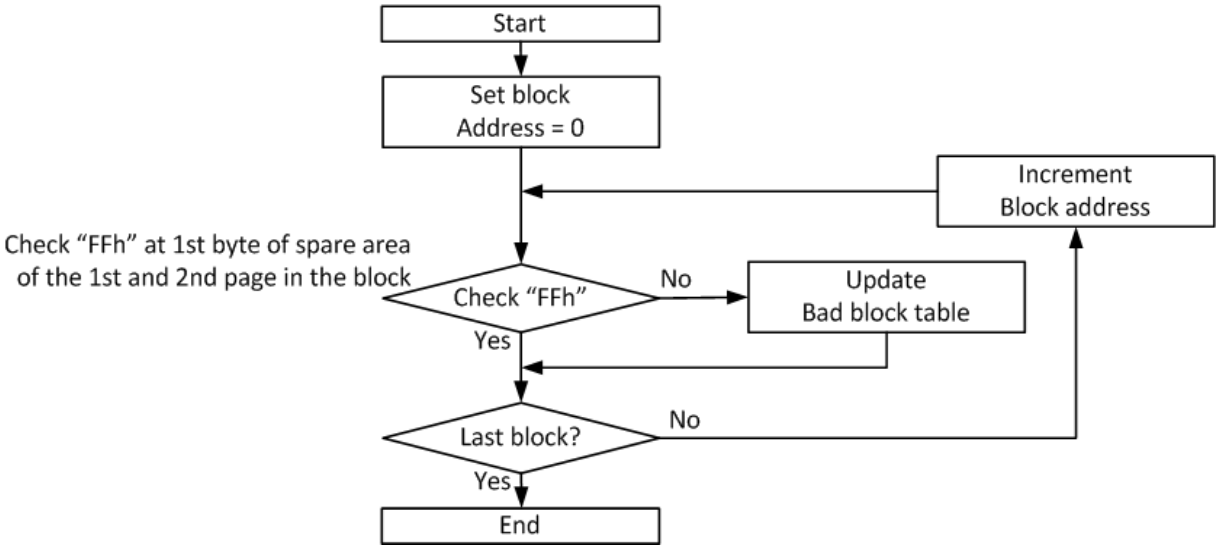

Figure 12-1 Flow Chart of Create Initial Invalid Block Table

12.3 Error in Operation

Additional invalid blocks may develop in the device during its life cycle. Following the procedures herein is required to guarantee reliable data in the device.

After each program and erase operation, check the status read to determine if the operation failed. In case of failure, a block replacement should be done with a bad-block management algorithm. The system has to use a minimum 4-bit ECC per 544 bytes of data to ensure data recovery.

Operation	Detection and recommended procedure
Erase	Status read after erase → Block Replacement
Program	Status read after program → Block Replacement
Read	Verify ECC → ECC correction

Table 12-2 Block Failure

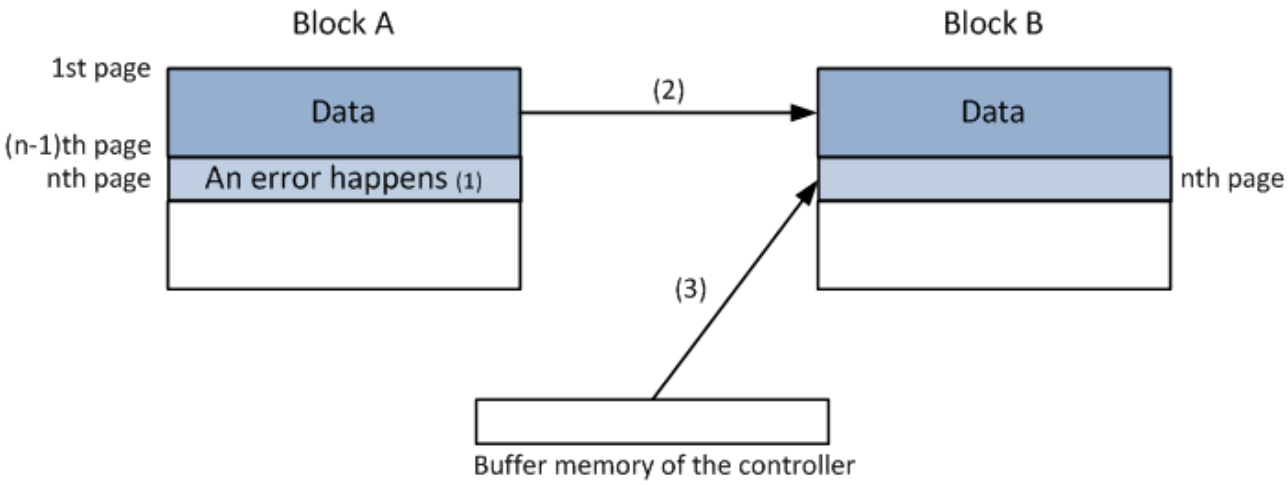

Figure 12-2 Bad Block Replacement

Notes:

1. **An error happens in the nth page of block A during program or erase operation.**
2. **Copy the data in block A to the same location of block B which is valid block.**
3. **Copy the nth page data of block A in the buffer memory to the nth page of block B.**
4. **Creating or updating bad block table for preventing further program or erase to block A.**

12.4 Addressing in Program Operation

The pages within the block have to be programmed sequentially from LSB (least significant bit) page to the MSB (most significant bit) within the block. The LSB is defined as the start page to program, does not need to be page 0 in the block. Random page programming is prohibited.

13. PACKAGE DIMENSIONS

13.1 TSOP 48-pin 12x20

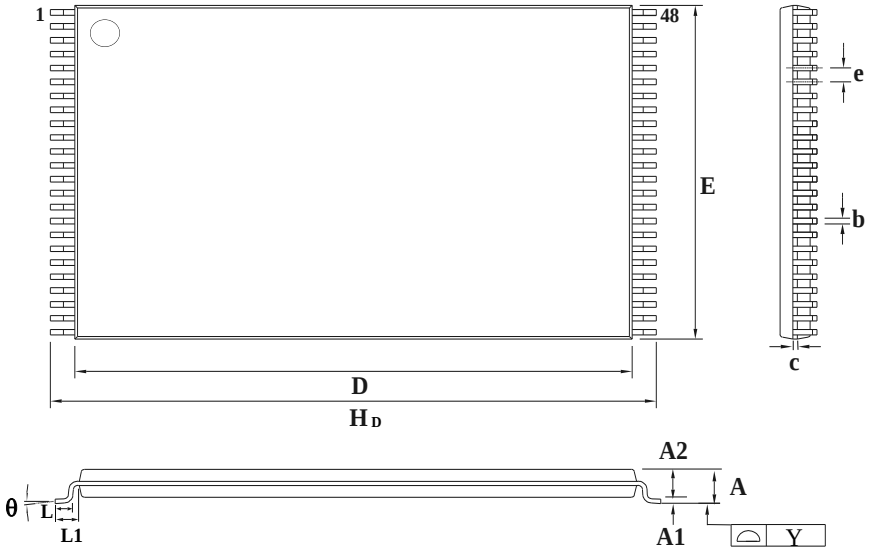

Symbol	MILLIMETER			INCH		
	MIN.	NOM.	MAX.	MIN.	NOM.	MAX.
A	—	—	1.20	—	—	0.047
A1	0.05	—	—	0.002	—	—
A2	0.95	1.00	1.05	0.037	0.039	0.041
D	18.3	18.4	18.5	0.720	0.724	0.728
H_D	19.8	20.0	20.2	0.780	0.787	0.795
E	11.9	12.0	12.1	0.468	0.472	0.476
b	0.17	0.22	0.27	0.007	0.009	0.011
c	0.10	—	0.21	0.004	—	0.008
e	—	0.50	—	—	0.020	—
L	0.50	0.60	0.70	0.020	0.024	0.028
L1	—	0.80	—	—	0.031	—
Y	—	—	0.10	—	—	0.004
θ	0	—	5	0	—	5

Figure 13-1 TSOP 48-PIN 12X20mm

13.2 Fine-Pitch Ball Grid Array 48-Ball

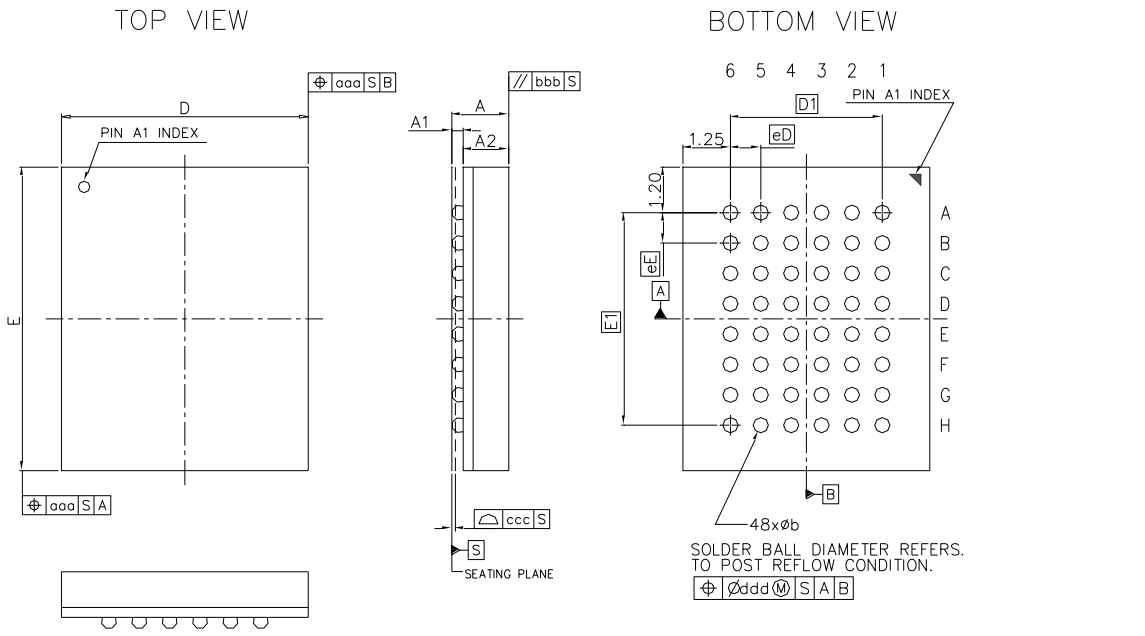

SYMBOL	DIMENSION (MM)		
	MIN.	NOM.	MAX.
A	0.80	0.90	1.00
A1	0.25	0.30	0.35
A2	0.55	0.60	0.65
b	0.35	0.40	0.45
D	6.40	6.50	6.60
E	7.90	8.00	8.10
D1	4.00 BSC		
E1	5.60 BSC.		
eD	0.80 BSC.		
eE	0.80 BSC.		
aaa	0.14		
bbb	--	--	0.1
ccc	--	--	0.10
ddd	--	--	0.15

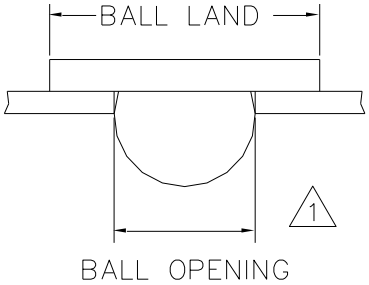

Note:
1. Ball land:0.45mm. Ball opening:0.35mm.
   PCB ball land suggested <=0.35 mm

Figure 13-2 Fine-Pitch Ball Grid Array 48-Ball

13.3 Fine-Pitch Ball Grid Array 63-Ball

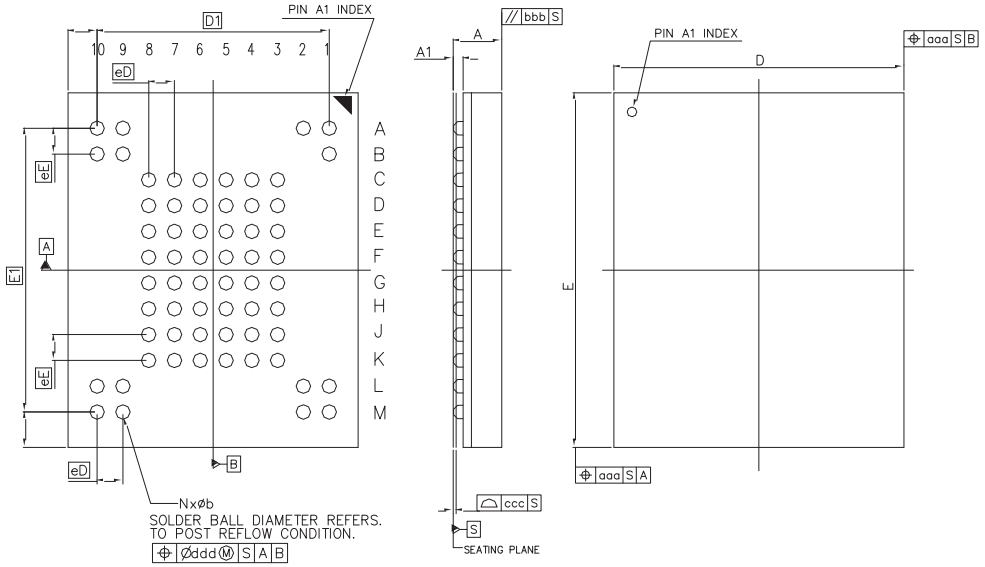

SYMBOL	DIMENSION (MM)		
	MIN.	NOM.	MAX.
A	---	---	1.00
A1	0.25	---	0.40
b	0.40	0.45	0.50
D	8.90	9.00	9.10
E	10.90	11.00	11.10
D1	7.20 BSC		
E1	8.80 BSC.		
eD	0.80 BSC.		
eE	0.80 BSC.		
aaa	0.15		
bbb	--	--	0.10
ccc	--	--	0.10
ddd	--	--	0.20
N	63		

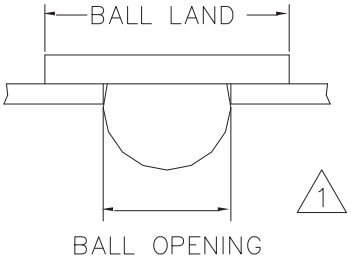

Note:
1. Ball land:0.5mm, Ball opening:0.4mm,
   PCB Ball land suggested 0.4mm

Figure 13-3 Fine-Pitch Ball Grid Array 63-Ball

14. ORDERING INFORMATION

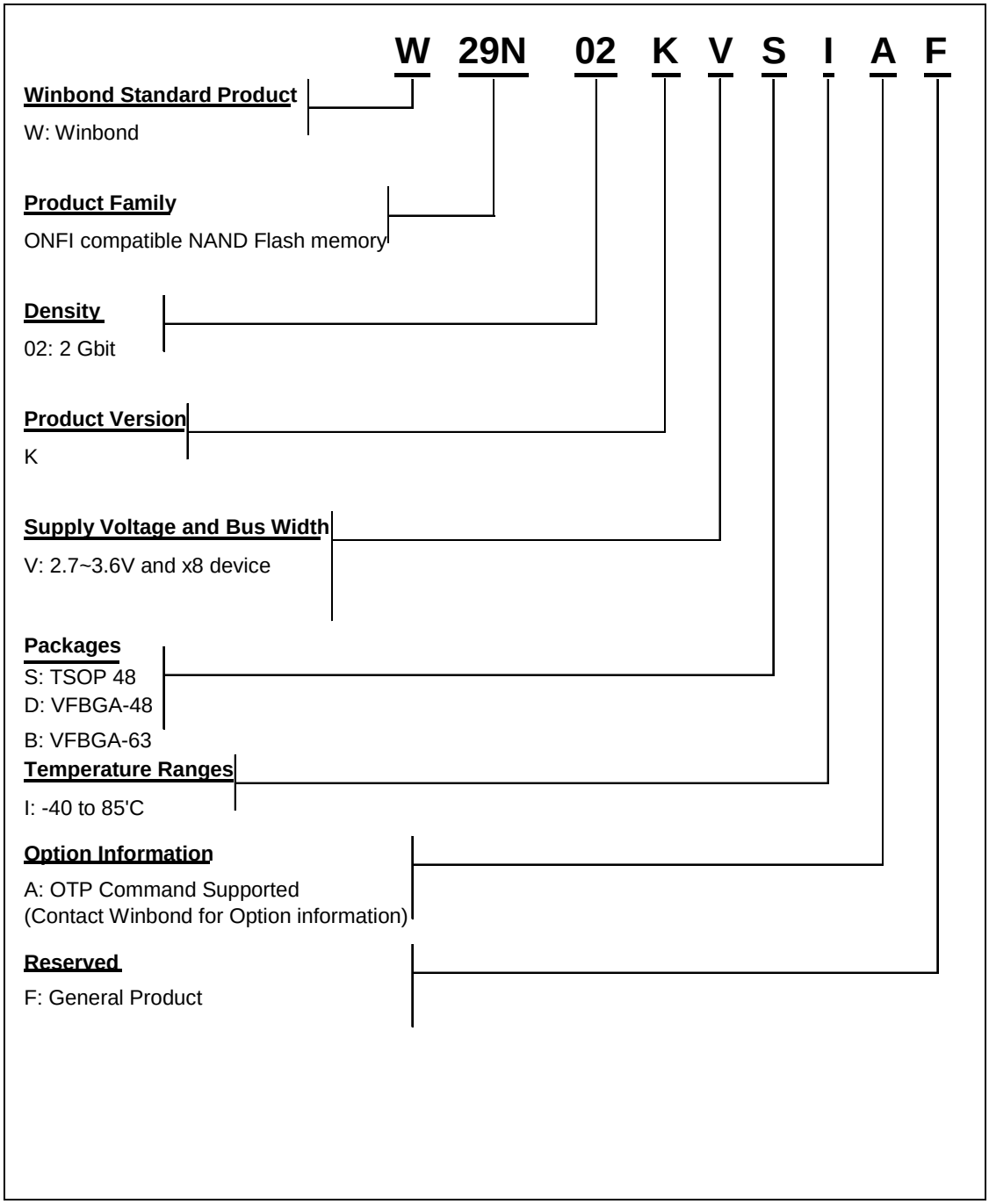

Figure 14-1 Ordering Part Number Description

15. VALID PART NUMBERS

The following table provides the valid part numbers for the W29N02KV NAND Flash Memory. Please contact Winbond for specific availability by density and package type. Winbond NAND Flash memories use a 12-digit Product Number for ordering.

Part Numbers for Industrial Temperature:

PACKAGE TYPE	DENSITY	VCC	BUS	PRODUCT NUMBER	TOP SIDE MARKING
S TSOP-48	2G-bit	3V	X8	W29N02KVSIAF	W29N02KVSIAF
D VFBGA-48	2G-bit	3V	X8	W29N02KVDIAF	W29N02KVDIAF
B VFBGA-63	2G-bit	3V	X8	W29N02KVBIAF	W29N02KVBIAF

Table 15-1 Part Numbers for Industrial Temperature

16. REVISION HISTORY

VERSION	DATE	PAGE	DESCRIPTION
0.1	11/29/2017		New Create as Preliminary
0.2	12/25/2017	11 21 22, 23 10, 68, 69, 70	Change description of DNU Update Device ID and configuration codes for Address 00h Update Parameter Page Output Value Add VFBGA-63 package
A	11/07/2018	 8 11	Remove ”Preliminary” Update Figure 3-1 Change description of N.C
B	12/26/2019	23	Added CRC value
C	5/17/2021	7 64	Updated Endurance and Retention specs Updated the descriptions for Initial Invalid Blocks mark

Table 16-1 History Table

Trademarks

Winbond is trademark of *Winbond Electronics Corporation.*
All other marks are the property of their respective owner.

Important Notice

Winbond products are not designed, intended, authorized or warranted for use as components in systems or equipment intended for surgical implantation, atomic energy control instruments, airplane or spaceship instruments, transportation instruments, traffic signal instruments, combustion control instruments, or for other applications intended to support or sustain life. Furthermore, Winbond products are not intended for applications wherein failure of Winbond products could result or lead to a situation where in personal injury, death or severe property or environmental damage could occur.

Winbond customers using or selling these products for use in such applications do so at their own risk and agree to fully indemnify Winbond for any damages resulting from such improper use or sales.

Please note that all data and specifications are subject to change without notice.
All the trademarks of products and companies mentioned in this datasheet belong to their respective owners.