PACKAGING SPECIFICATION

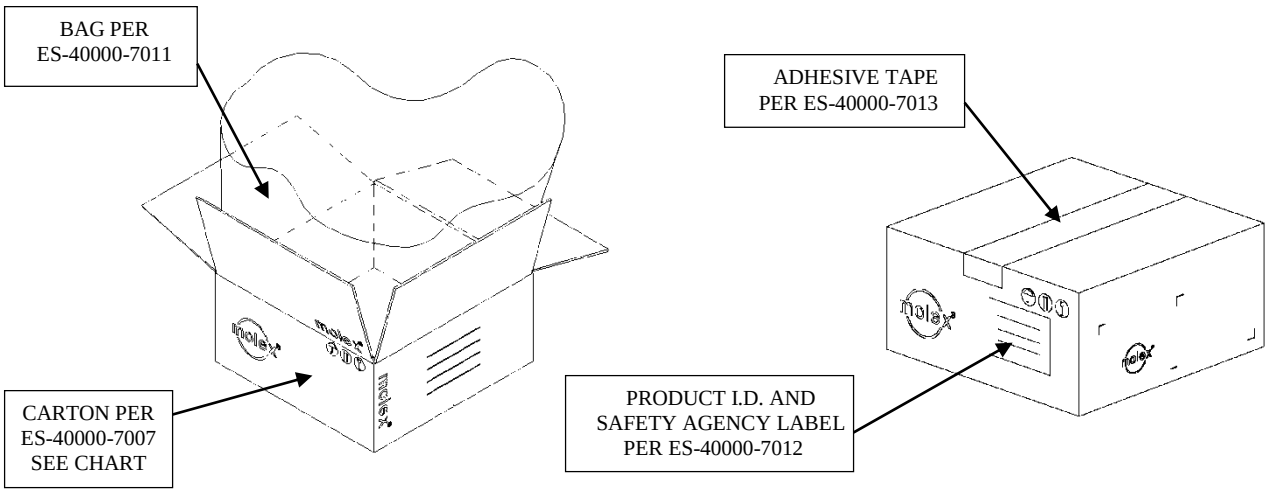

1) PARTS ARE TO BE BULK PACKED IN BAGS IN QUANTITIES SHOWN IN CHART. BAG PART NUMBER AND SIZE ARE LISTED FOR REFERENCE ONLY. BAGS ARE TO BE CLOSED.
2) PLACE BAGS IN CARTON AS INDICATED.
3) SHEETS 1 AND 2 ARE FOR PANEL MOUNT. SEE SHEETS 3 AND 4 FOR FREE HANGING.

CKT SIZE	MATERIAL NO.	LINER BAG PART NO. OR EQUIVALENT (SEE NOTE 1)	CARTON PART NO. OR EQUIVALENT	PARTS PER BAG/CARTON (SPQ)
2	43020-0200	31300-6440	30907-3001 OR 88596-1634	4000
	43020-0208			
	43020-0210			
4	43020-0400	31300-6440	30907-3001 OR 88596-1634	2500
	43020-0408			
	43020-0410			
6	43020-0600	31300-6440	30907-3001 OR 88596-1634	2500
	43020-0608			
	43020-0610			
8	43020-0800	31300-6440	30907-3001 OR 88596-1634	1500
	43020-0808			
	43020-0810			
10	43020-1000	31300-8790	96707-0015 OR 88596-1608	3000
	43020-1008			
	43020-1010			
12	43020-1200	31300-8790	96707-0015 OR 88596-1608	3000
	43020-1208			
	43020-1210			

PACKAGING SPECIFICATION

CKT SIZE	MATERIAL NO.	LINER BAG PART NO. OR EQUIVALENT (SEE NOTE 1)	CARTON PART NO. OR EQUIVALENT	PARTS PER BAG/CARTON (SPQ)
14	43020-1400	31300-6440	30907-3001 OR 88596-1634	1000
	43020-1410			
16	43020-1600	31300-6440	30907-3001 OR 88596-1634	800
	43020-1610			
18	43020-1800	31300-6440	30907-3001 OR 88596-1634	600
	43020-1810			
20	43020-2000	31300-6440	30907-3001 OR 88596-1634	600
	43020-2010			
22	43020-2200	31300-6440	30907-3001 OR 88596-1634	500
	43020-2210			
24	43020-2400	31300-6440	30907-3001 OR 88596-1634	500
	43020-2410			

PACKAGING SPECIFICATION

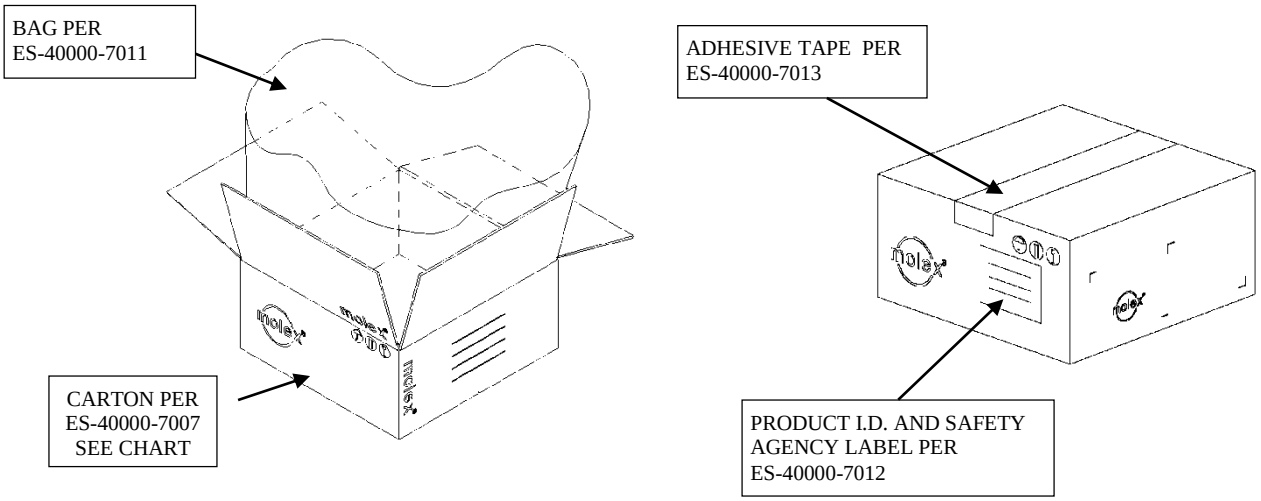

1.) SHEETS 3 AND 4 ARE FOR FREE HANGING. SEE SHEET 1 AND 2 FOR PANEL MOUNT.

CKT SIZE	MATERIAL NO.	LINER BAG PART NO. OR EQUIVALENT (SEE NOTE 1)	CARTON PART NO. OR EQUIVALENT	PARTS PER BAG/CARTON (SPQ)
2	43020-0201	31300-6440	30907-3001 OR 88596-1634	5000
	43020-0209			
	43020-0211			
4	43020-0401	31300-6440	30907-3001 OR 88596-1634	2500
	43020-0409			
	43020-0411			
6	43020-0601	31300-8790	96707-0015 OR 88596-1608	4500
	43020-0609			
	43020-0611			
8	43020-0801	31300-8790	96707-0015 OR 88596-1608	4000
	43020-0809			
	43020-0811			
10	43020-1001	31300-8790	96707-0015 OR 88596-1608	4000
	43020-1009			
	43020-1011			
12	43020-1201	31300-8790	96707-0015 OR 88596-1608	3000
	43020-1209			
	43020-1211			

PACKAGING SPECIFICATION

CKT SIZE	MATERIAL NO.	LINER BAG PART NO. OR EQUIVALENT (SEE NOTE 1)	CARTON PART NO. OR EQUIVALENT	PARTS PER BAG/CARTON (SPQ)
14	43020-1401 43020-1411	31300-6440	30907-3001 OR 88596-1634	1000
16	43020-1601 43020-1611	31300-6440	30907-3001 OR 88596-1634	1000
18	43020-1801 43020-1811	31300-6440	30907-3001 OR 88596-1634	1000
20	43020-2001 43020-2011	31300-6440	30907-3001 OR 88596-1634	500
22	43020-2201 43020-2211	31300-6440	30907-3001 OR 88596-1634	500
24	43020-2401 43020-2411	31300-6440	30907-3001 OR 88596-1634	500