ITEM NUMBER	CKT. SIZE	DIM."A"	DIM."B"	DIM."C"	TERMINAL PLATING	CLIP PLATING	STATUS
42820-2213	2	.138/(3.50)	.823/(20.90)	.071/(1.80)	SELECT GOLD IN CONTACT AREA (SEE LEGEND) SELECT MATTE TIN ON SOLDER TAILS	NONE	ACTIVE
42820-2313	2	.138/(3.50)	.823/(20.90)	N/A			
42820-2223	2	.201/(5.10)	.823/(20.90)	.102/(2.60)			
42820-2233	2	.201/(5.10)	.823/(20.90)	.134/(3.40)			
42820-2243	2	.327/(8.30)	.823/(20.90)	.259/(6.58)			
42820-3213	3	.138/(3.50)	1.217/(30.90)	.071/(1.80)			
42820-3228	3	.138/(3.50)	1.217/(30.90)	.102/(2.60)			
42820-3223	3	.201/(5.10)	1.217/(30.90)	.102/(2.60)			
42820-3233	3	.201/(5.10)	1.217/(30.90)	.134/(3.40)			
42820-3243	3	.327/(8.30)	1.217/(30.90)	.259/(6.58)			
42820-4213	4	.138/(3.50)	1.610/(40.90)	.071/(1.80)			
42820-4223	4	.201/(5.10)	1.610/(40.90)	.102/(2.60)			
42820-4233	4	.201/(5.10)	1.610/(40.90)	.134/(3.40)			
42820-4243	4	.327/(8.30)	1.610/(40.90)	.259/(6.58)			
42820-5213	5	.138/(3.50)	2.004/(50.90)	.071/(1.80)			
42820-5223	5	.201/(5.10)	2.004/(50.90)	.102/(2.60)			
42820-5233	5	.201/(5.10)	2.004/(50.90)	.134/(3.40)			
42820-5243	5	.327/(8.30)	2.004/(50.90)	.259/(6.58)			
42820-6213	6	.138/(3.50)	2.398/(60.90)	.071/(1.80)			
42820-6223	6	.201/(5.10)	2.398/(60.90)	.102/(2.60)			
42820-6233	6	.201/(5.10)	2.398/(60.90)	.134/(3.40)			
42820-6243	6	.327/(8.30)	2.398/(60.90)	.259/(6.58)			
42820-2214	2	.138/(3.50)	.823/(20.90)	.071/(1.80)	SELECT SILVER IN CONTACT AREA (SEE LEGEND) SELECT MATTE TIN ON SOLDER TAILS		ACTIVE
42820-2224	2	.201/(5.10)	.823/(20.90)	.102/(2.60)			
42820-2234	2	.201/(5.10)	.823/(20.90)	.134/(3.40)			
42820-2244	2	.327/(8.30)	.823/(20.90)	.259/(6.58)			
42820-2314	2	.138/(3.50)	.823/(20.90)	N/A			
42820-3214	3	.138/(3.50)	1.217/(30.90)	.071/(1.80)			
42820-3224	3	.201/(5.10)	1.217/(30.90)	.102/(2.60)			
42820-3234	3	.201/(5.10)	1.217/(30.90)	.134/(3.40)			
42820-3244	3	.327/(8.30)	1.217/(30.90)	.259/(6.58)			
42820-3314	3	.138/(3.50)	1.217/(30.90)	N/A			
42820-4214	4	.138/(3.50)	1.610/(40.90)	.071/(1.80)			
42820-4224	4	.201/(5.10)	1.610/(40.90)	.102/(2.60)			
42820-4234	4	.201/(5.10)	1.610/(40.90)	.134/(3.40)			
42820-4244	4	.327/(8.30)	1.610/(40.90)	.259/(6.58)			
42820-5214	5	.138/(3.50)	2.004/(50.90)	.071/(1.80)			
42820-5224	5	.201/(5.10)	2.004/(50.90)	.102/(2.60)			
42820-5234	5	.201/(5.10)	2.004/(50.90)	.134/(3.40)			
42820-5244	5	.327/(8.30)	2.004/(50.90)	.259/(6.58)			
42820-5314	5	.138/(3.50)	2.004/(50.90)	N/A			
42820-6214	6	.138/(3.50)	2.398/(60.90)	.071/(1.80)			
42820-6224	6	.201/(5.10)	2.398/(60.90)	.102/(2.60)			
42820-6234	6	.201/(5.10)	2.398/(60.90)	.134/(3.40)			
42820-6244	6	.327/(8.30)	2.398/(60.90)	.259/(6.58)			
42820-2294	2	.138/(3.50)	0.823/(20.90)	.071/(1.80)			
42820-4294	4	.138/(3.50)	1.610/(40.90)	.071/(1.80)			

NOTE:
1) MATERIAL:
HOUSING MATERIAL:30% GLASS-FILIED NYLON 4/6, U.L.94V-0, COLOR: BLACK.
TERMINAL MATERIAL ALLOY 151.
2) FINISH: 2= .000100/(.00254) MIN. TIN OVER .000050/(.00127) MIN. NICKEL.
3= .000030/(.00076) MIN. SELECT GOLD IN CONTACT AREA.
OVER .000050/(.00127) MIN NICKEL.
4= .000100/(00254) MIN SELECT SILVER IN CONTACT AREA
.000100/(.00254) MIN. SELECT TIN ON SOLDER TAILS
OVER .000050/(.00127) MIN NICKEL.
3) PRODUCT SPECIFICATION: PS-42815-001.
4) PACKAGING INFORMATION SEE MOLEX PACKING SPEC. PK-42820-910
5) PART MATES WITH MOLEX RECEPTACLE *42816-***2 WITH TPA.
6) PART IS DESIGNED IN METRIC.
7) AN "X" IN FRONT OF THE ITEM NUMBER INDICATES THE PART IS NOT TOOLED.
8) PARTS ARE NOT TO BE MATED OR UNMATED WHILE CIRCUITS ARE LIVE
9) WHEN USING OVERALL TIN PLATED TERMINALS:
FOR APPLICATIONS INVOLVING VIBRATION AND/OR TERMINAL CYCLING, MOLEX STRONGLY RECOMMENDS THE USE OF NYE LUBRICANT (NYOGEL 760G) ON THE MATING SURFACES OF THE TERMINAL.
10) PARTS CONFORMS TO CLASS 'B' REQUIRMENTS OF COSMETIC SPECIFICATIONS PS-45499-002
11) FOR TAPE AND REEL PACKAGING REFER TO PK-45986-004
12) BOARD CLIP HOLE MAY OR MAY NOT BE PLATED. REFER TO CHART FOR PLATED / UNPLATED CLIPS.
13) REFER AS-42815-001 FOR TIN PLATED TERMINALS RECOMMENDED LUBRICATION PROCEDURE.
14) FOR PN 42820**9* PLEASE REFER TO MOLEX PACAKAGING SPEC. 428204294-PK.

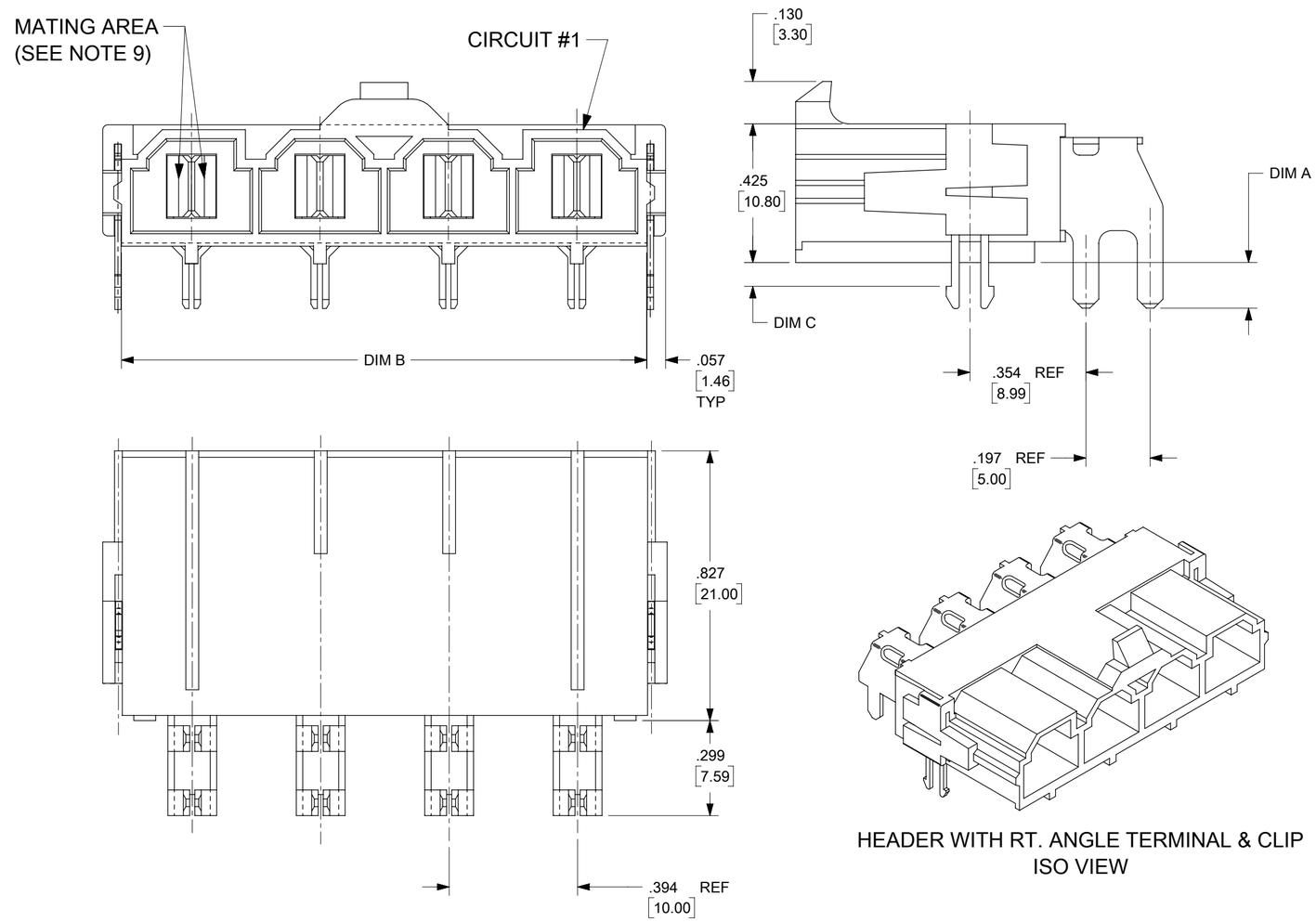

HEADER WITH RT. ANGLE TERMINAL & CLIP
ISO VIEW

LEGEND :

A-42820 - * * * *

CIRCUIT SIZE
(2-6)

PLATING
2 OR 9 = OVERALL BRIGHT TIN OVER NICKEL
3 OR 8 = SELECT GOLD IN CONTACT AREA
SELECT MATTE TIN ON SOLDER TAILS OVER NICKEL
4 = SELECT SILVER IN CONTACT AREA
SELECT MATTE TIN ON SOLDER TAILS OVER NICKEL

MOUNTING OPTION
1 = FLANGES (SEE DWG SDA-42820-*1**)
2 = RETENTION CLIP
3 = NO RETENTION CLIP

P.C. BOARD THICKNESS
1 = .062/(1.57) NOMINAL
2 = .093/(2.36) NOMINAL
3 = .125/(3.18) NOMINAL
4 = .250/(6.35) NOMINAL
9 = .062/(1.57) NOMINAL WITH 428204294-PK (14)

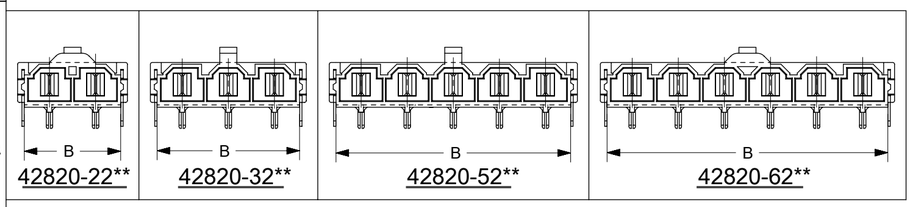

THIS DRAWING CONTAINS INFORMATION THAT IS PROPRIETARY TO MOLEX ELECTRONIC TECHNOLOGIES, LLC AND SHOULD NOT BE USED WITHOUT WRITTEN PERMISSION

DIMENSION UNITS	SCALE
mm	3:1

GENERAL TOLERANCES (UNLESS SPECIFIED)

ANGULAR TOL	±	0.5 °
4 PLACES	±	
3 PLACES	±	
2 PLACES	±	0.13
1 PLACE	±	0.25
0 PLACES	±	

DRAFT WHERE APPLICABLE MUST REMAIN WITHIN DIMENSIONS

CURRENT REV DESC:

EC NO: 687922
DRWN: SHRUTJ 2021/12/06
CHK'D: SHRUTJ 2021/12/07
APPR: ISHWARG 2021/12/07

INITIAL REVISION:
DRWN: RFC_PLMIMP 2018/11/02
APPR: JCOMERCI 2001/07/18

THIRD ANGLE PROJECTION | DRAWING: C-SIZE | SERIES: 42820

molex

MINI-FIT SR.
RIGHT ANGLE HEADER ASSEMBLY

PRODUCT CUSTOMER DRAWING

DOCUMENT NUMBER	DOC TYPE	DOC PART	REVISION
SDA-42820-0002	PSD	001	J1

MATERIAL NUMBER	CUSTOMER	SHEET NUMBER
SEE CHART	GENERAL MARKET	1 OF 2

DOCUMENT STATUS	P1	RELEASE DATE	2021/12/07 07:18:05

FORMAT: master-tb-prod-C
REVISION: H
DATE: 2018/01/18

ITEM NUMBER	CKT. SIZE	DIM."A"	DIM."B"	DIM."C"	TERMINAL PLATING	CLIP PLATING	STATUS	
42820-2212	2	.138/(3.50)	.823/(20.90)	.071/(1.80)	OVERALL BRIGHT TIN	NONE	PLANNED FOR OBSOLESCENCE	SEE NOTE 11
42820-2219	2	.138/(3.50)	.823/(20.90)	.071/(1.80)				
42820-2222	2	.201/(5.10)	.823/(20.90)	.102/(2.60)				
42820-2232	2	.201/(5.10)	.823/(20.90)	.134/(3.40)				
42820-2239	2	.201/(5.10)	.823/(20.90)	.134/(3.40)				
42820-2242	2	.327/(8.30)	.823/(20.90)	.259/(6.58)				
42820-3212	3	.138/(3.50)	1.217/(30.90)	.071/(1.80)				
42820-3222	3	.201/(5.10)	1.217/(30.90)	.102/(2.60)				
42820-3229	3	.201/(5.10)	1.217/(30.90)	.102/(2.60)				
42820-3232	3	.201/(5.10)	1.217/(30.90)	.134/(3.40)				
42820-3242	3	.327/(8.30)	1.217/(30.90)	.259/(6.58)				
42820-4212	4	.138/(3.50)	1.610/(40.90)	.071/(1.80)				
42820-4312	4	.138/(3.50)	1.610/(40.90)	N/A				
42820-4222	4	.201/(5.10)	1.610/(40.90)	.102/(2.60)				
42820-4232	4	.201/(5.10)	1.610/(40.90)	.134/(3.40)				
42820-4242	4	.327/(8.30)	1.610/(40.90)	.259/(6.58)				
42820-5212	5	.138/(3.50)	2.004/(50.90)	.071/(1.80)				
42820-5222	5	.201/(5.10)	2.004/(50.90)	.102/(2.60)				
42820-5232	5	.201/(5.10)	2.004/(50.90)	.134/(3.40)				
42820-5242	5	.327/(8.30)	2.004/(50.90)	.259/(6.58)				
42820-6212	6	.138/(3.50)	2.398/(60.90)	.071/(1.80)				
42820-6222	6	.201/(5.10)	2.398/(60.90)	.102/(2.60)				
42820-6229	6	.201/(5.10)	2.398/(60.90)	.102/(2.60)				
42820-6232	6	.201/(5.10)	2.398/(60.90)	.134/(3.40)				
42820-6242	6	.327/(8.30)	2.398/(60.90)	.259/(6.58)				
42820-2332	2	.201/(5.10)	.823/(20.90)	N/A				
42820-2342	2	.327/(8.30)	.823/(20.90)	N/A				

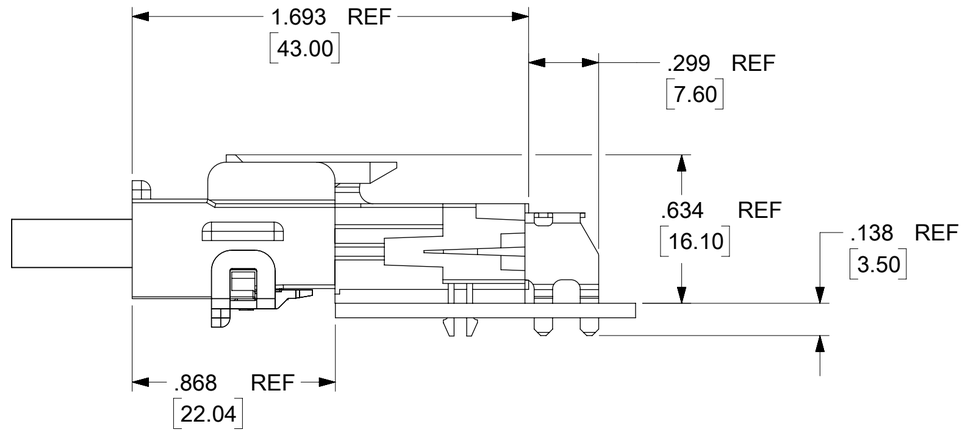

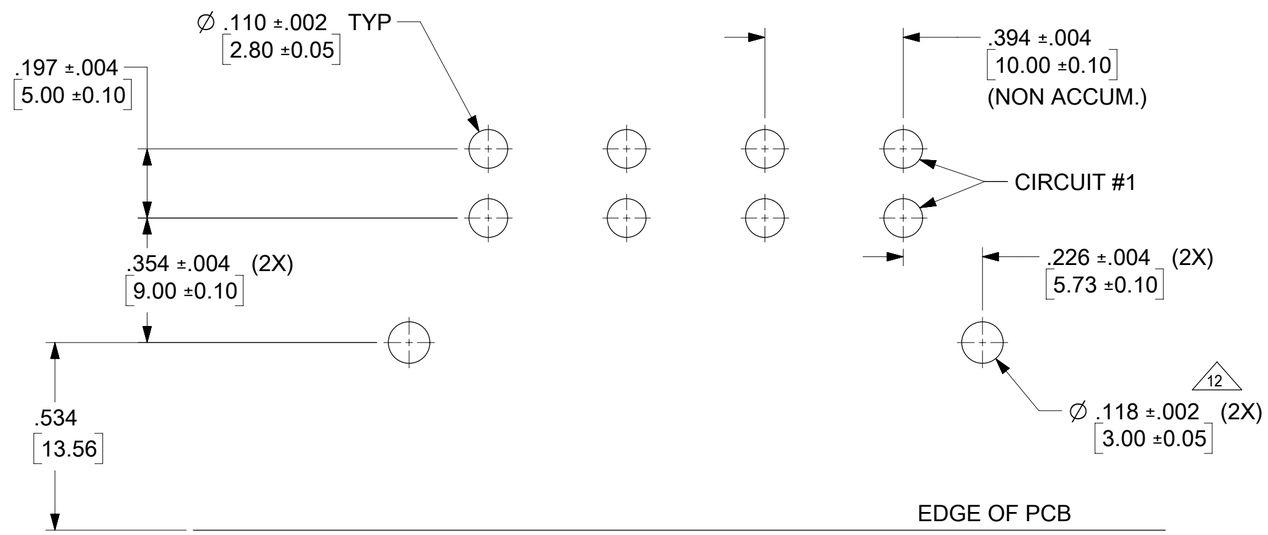

RECOMMENDED P.C. BOARD PLATED -THRU HOLE LAYOUT
(4 CKT. SHOWN FOR REF.)

THIS DRAWING CONTAINS INFORMATION THAT IS PROPRIETARY TO MOLEX ELECTRONIC TECHNOLOGIES, LLC AND SHOULD NOT BE USED WITHOUT WRITTEN PERMISSION

DIMENSION UNITS	SCALE
mm	3:1

GENERAL TOLERANCES (UNLESS SPECIFIED)

ANGULAR TOL	±	0.5 °
4 PLACES	±	
3 PLACES	±	
2 PLACES	±	0.13
1 PLACE	±	0.25
0 PLACES	±	

DRAFT WHERE APPLICABLE MUST REMAIN WITHIN DIMENSIONS

CURRENT REV DESC:

EC NO: 687922
DRWN: SHRUTJ 2021/12/06
CHK'D: SHRUTJ 2021/12/07
APPR: ISHWARG 2021/12/07

INITIAL REVISION:
DRWN: RFC_PLMIMP 2018/11/02
APPR: JCOMERCI 2001/07/18

THIRD ANGLE PROJECTION | DRAWING: C-SIZE | SERIES: 42820

molex

MINI-FIT SR.
RIGHT ANGLE HEADER ASSEMBLY

PRODUCT CUSTOMER DRAWING

DOCUMENT NUMBER	DOC TYPE	DOC PART	REVISION
SDA-42820-0002	PSD	001	J1

MATERIAL NUMBER	CUSTOMER	SHEET NUMBER
SEE CHART	GENERAL MARKET	2 OF 2

DOCUMENT STATUS	P1	RELEASE DATE	2021/12/07 07:18:05

FORMAT: master-tb-prod-C
REVISION: H
DATE: 2018/01/18