NTTFS002N04CL

MOSFET – Power, Single, N-Channel

40 V, 2.2 mΩ, 142 A

ON Semiconductor®

www.onsemi.com

$V_{(BR)DSS}$	$R_{DS(on)}$ MAX	I_D MAX
40 V	2.2 mΩ @ 10 V	142 A
	3.5 mΩ @ 4.5 V	

Features

- Small Footprint (3.3 x 3.3 mm) for Compact Design
- Low $R_{DS(on)}$ to Minimize Conduction Losses
- Low Capacitance to Minimize Driver Losses
- These Devices are Pb−Free and are RoHS Compliant

MAXIMUM RATINGS (T_J = 25°C unless otherwise noted)

Parameter			Symbol	Value	Unit
Drain−to−Source Voltage			V_{DSS}	40	V
Gate−to−Source Voltage			V_{GS}	±20	V
Continuous Drain Current $R_{\theta JC}$ (Notes 1, 2, 3, 4)	Steady State	T_C = 25°C	I_D	142	A
		T_C = 100°C		80	
Power Dissipation $R_{\theta JC}$ (Notes 1, 2, 3)		T_C = 25°C	P_D	85	W
		T_C = 100°C		27	
Continuous Drain Current $R_{\theta JA}$ (Notes 1, 3, 4)	Steady State	T_A = 25°C	I_D	28	A
		T_A = 100°C		20	
Power Dissipation $R_{\theta JA}$ (Notes 1, 3)		T_A = 25°C	P_D	3.2	W
		T_A = 100°C		1.6	
Pulsed Drain Current	T_A = 25°C, t_p = 10 μs		I_{DM}	706	A
Operating Junction and Storage Temperature Range			T_J, T_{stg}	−55 to +175	°C
Source Current (Body Diode)			I_S	70.4	A
Single Pulse Drain−to−Source Avalanche Energy ($I_{L(pk)}$ = 10.2 A)			E_{AS}	268	mJ
Lead Temperature for Soldering Purposes (1/8″ from case for 10 s)			T_L	260	°C

Stresses exceeding those listed in the Maximum Ratings table may damage the device. If any of these limits are exceeded, device functionality should not be assumed, damage may occur and reliability may be affected.

THERMAL RESISTANCE MAXIMUM RATINGS (Note 1)

Parameter	Symbol	Value	Unit
Junction−to−Case − Steady State (Note 3)	$R_{\theta JC}$	1.8	°C/W
Junction−to−Ambient − Steady State (Note 3)	$R_{\theta JA}$	46.5	

1. The entire application environment impacts the thermal resistance values shown, they are not constants and are only valid for the particular conditions noted.
2. Psi (Ψ) is used as required per JESD51−12 for packages in which substantially less than 100% of the heat flows to single case surface.
3. Surface−mounted on FR4 board using a 650 mm^2, 2 oz. Cu pad.
4. Continuous DC current rating. Maximum current for pulses as long as 1 second is higher but is dependent on pulse duration and duty cycle.

N−Channel

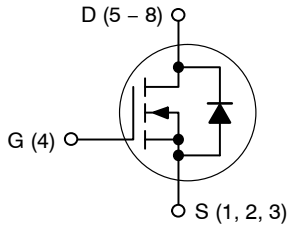

WDFN8 (μ8FL) CASE 511DY

MARKING DIAGRAM

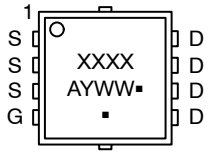

XXXX = Specific Device Code
A = Assembly Location
Y = Year
WW = Work Week
▪ = Pb−Free Package
(Note: Microdot may be in either location)

ORDERING INFORMATION

See detailed ordering, marking and shipping information in the package dimensions section on page 5 of this data sheet.

© Semiconductor Components Industries, LLC, 2019

ELECTRICAL CHARACTERISTICS (T_J = 25°C unless otherwise noted)

Parameter	Symbol	Test Condition		Min	Typ	Max	Unit
OFF CHARACTERISTICS							
Drain−to−Source Breakdown Voltage	$V_{(BR)DSS}$	V_{GS} = 0 V, I_D = 250 μA		40			V
Zero Gate Voltage Drain Current	I_{DSS}	V_{GS} = 0 V, V_{DS} = 40 V	T_J = 25°C			10	μA
			T_J = 125°C			250	
Gate−to−Source Leakage Current	I_{GSS}	V_{DS} = 0 V, V_{GS} = 20 V				100	nA
ON CHARACTERISTICS (Note 5)							
Gate Threshold Voltage	$V_{GS(TH)}$	V_{GS} = V_{DS}, I_D = 90 μA		1.2		2.0	V
Drain−to−Source On Resistance	$R_{DS(on)}$	V_{GS} = 10 V, I_D = 50 A			1.8	2.2	mΩ
		V_{GS} = 4.5 V, I_D = 50 A			2.8	3.5	
Forward Transconductance	g_{FS}	V_{DS} = 15 V, I_D = 50 A				135	S
CHARGES AND CAPACITANCES							
Input Capacitance	C_{iss}	V_{GS} = 0 V, f = 1.0 MHz, V_{DS} = 25 V			2940		pF
Output Capacitance	C_{oss}				1260		
Reverse Transfer Capacitance	C_{rss}				47		
Threshold Gate Charge	$Q_{G(TH)}$	V_{GS} = 10 V, V_{DS} = 20 V, I_D = 50 A			5.3		nC
Gate−to−Source Charge	Q_{GS}				9.6		
Gate−to−Drain Charge	Q_{GD}				7.4		
Total Gate Charge	$Q_{G(TOT)}$	V_{GS} = 10 V, V_{DS} = 20 V, I_D = 50 A			49		nC
SWITCHING CHARACTERISTICS (Note 6)							
Turn−On Delay Time	$t_{d(on)}$	V_{GS} = 10 V, V_{DS} = 20 V, I_D = 50 A			14		ns
Rise Time	t_r				77		
Turn−Off Delay Time	$t_{d(off)}$				70		
Fall Time	t_f				22		
DRAIN−SOURCE DIODE CHARACTERISTICS							
Forward Diode Voltage	V_{SD}	V_{GS} = 0 V, I_S = 50 A	T_J = 25°C		0.84	1.2	V
			T_J = 125°C		0.72		
Reverse Recovery Time	t_{RR}	V_{GS} = 0 V, dI_S/dt = 100 A/μs, I_S = 50 A			54		ns
Charge Time	t_a				24		
Discharge Time	t_b				30		
Reverse Recovery Charge	Q_{RR}				43		nC

Product parametric performance is indicated in the Electrical Characteristics for the listed test conditions, unless otherwise noted. Product performance may not be indicated by the Electrical Characteristics if operated under different conditions.

5. Pulse Test: Pulse Width ≤ 300 μs, Duty Cycle ≤ 2%.
6. Switching characteristics are independent of operating junction temperatures.

TYPICAL CHARACTERISTICS

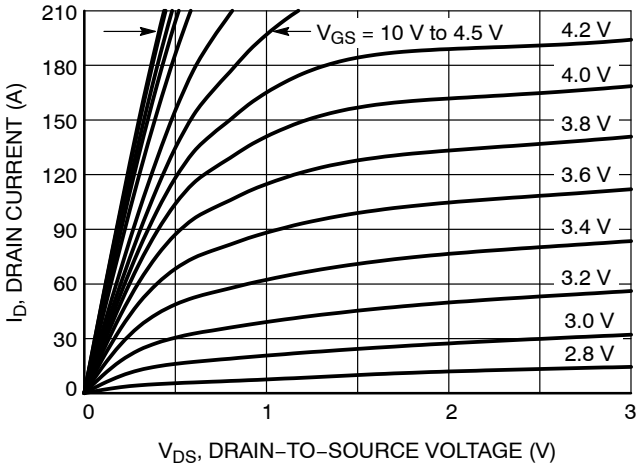

Figure 1. On−Region Characteristics

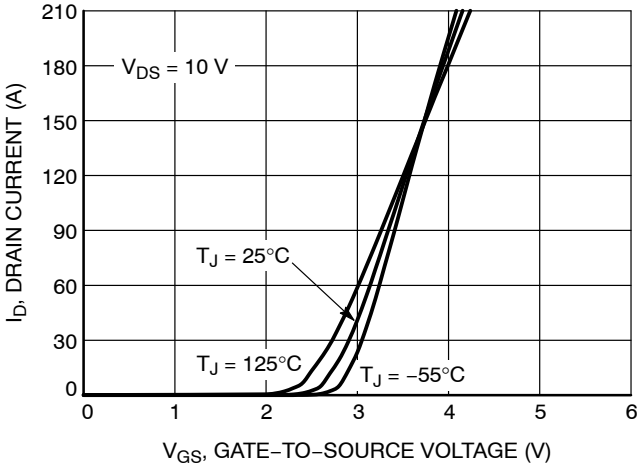

Figure 2. Transfer Characteristics

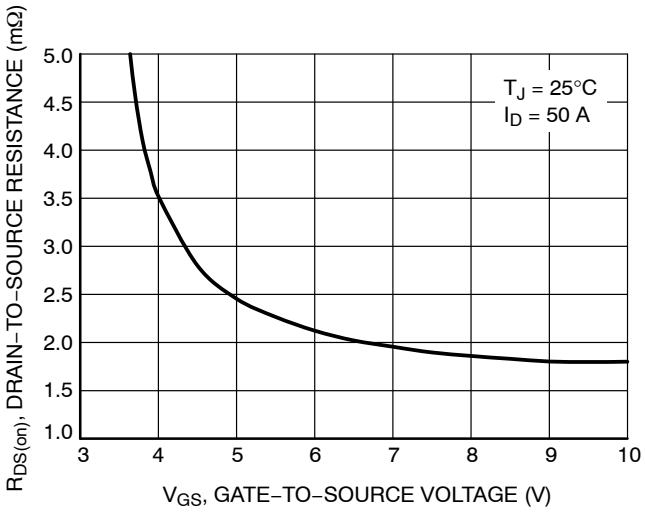

Figure 3. On−Resistance vs. Gate−to−Source Voltage

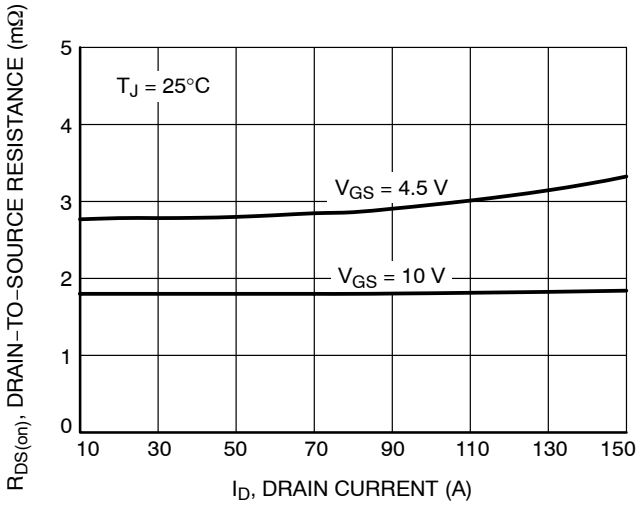

Figure 4. On−Resistance vs. Drain Current and Gate Voltage

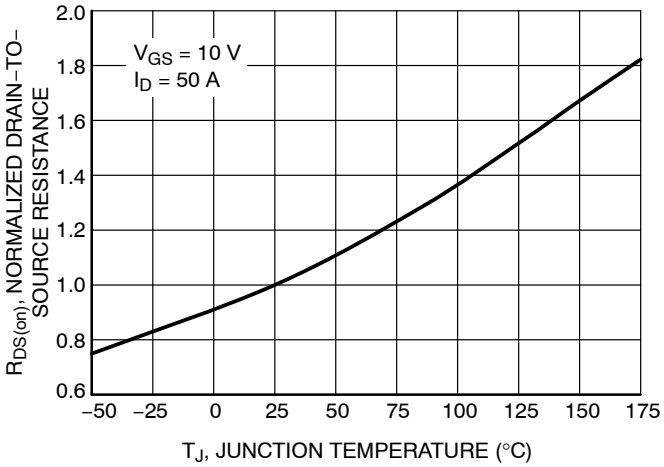

Figure 5. On−Resistance Variation with Temperature

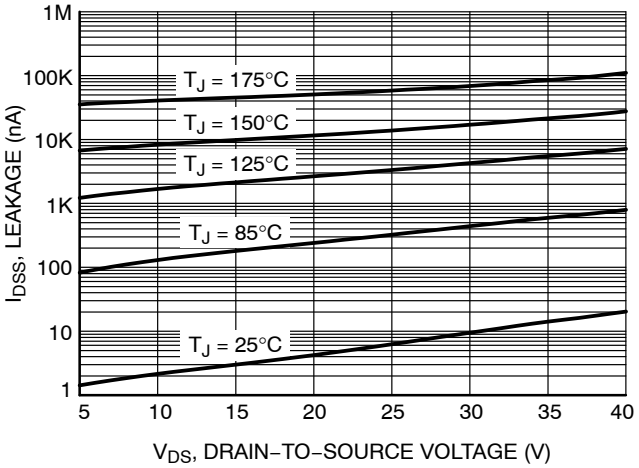

Figure 6. Drain−to−Source Leakage Current vs. Voltage

TYPICAL CHARACTERISTICS

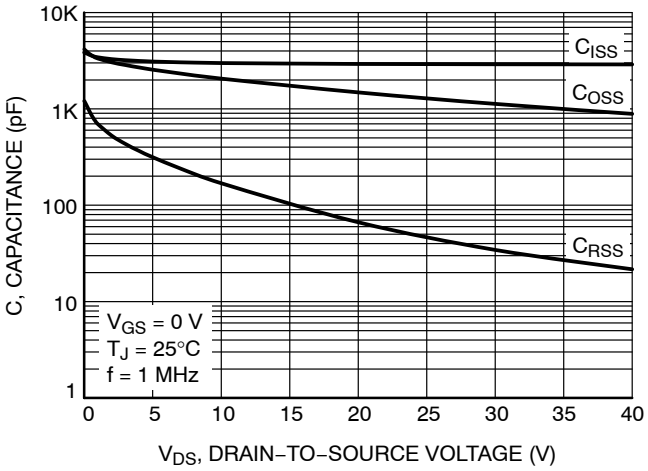

Figure 7. Capacitance Variation

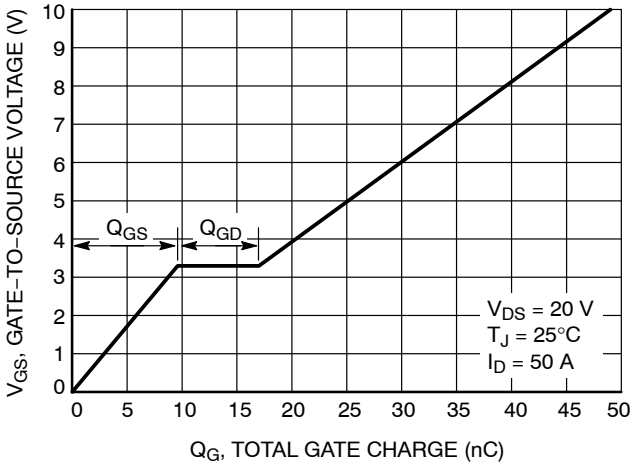

Figure 8. Gate−to−Source Voltage vs. Total Charge

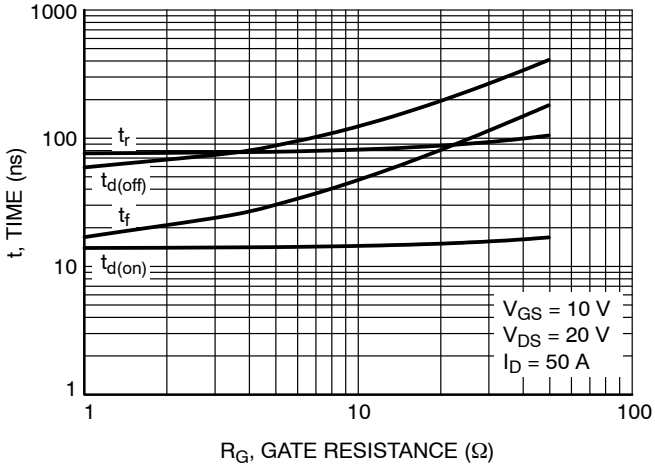

Figure 9. Resistive Switching Time Variation vs. Gate Resistance

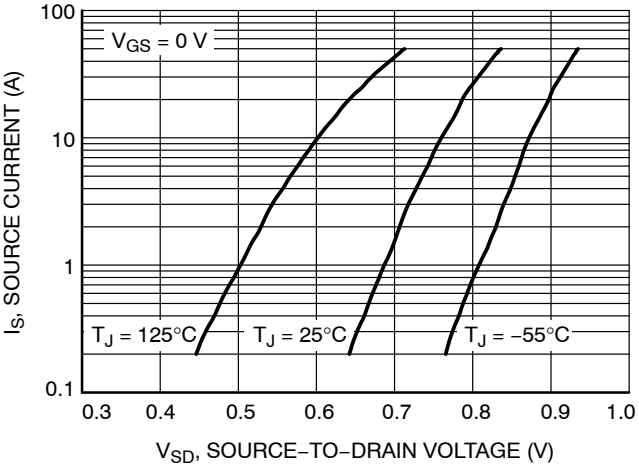

Figure 10. Diode Forward Voltage vs. Current

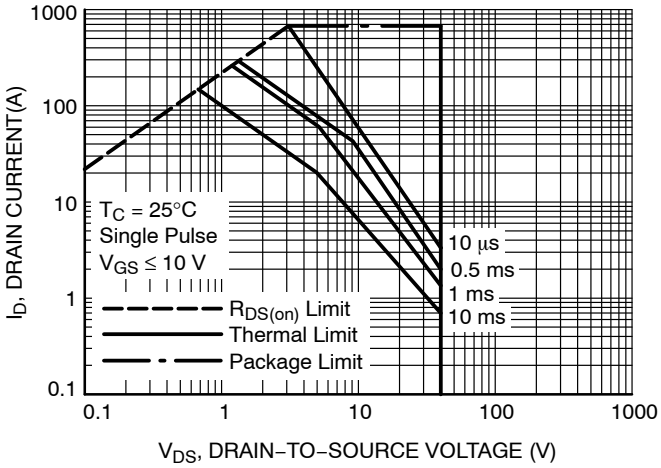

Figure 11. Maximum Rated Forward Biased Safe Operating Area

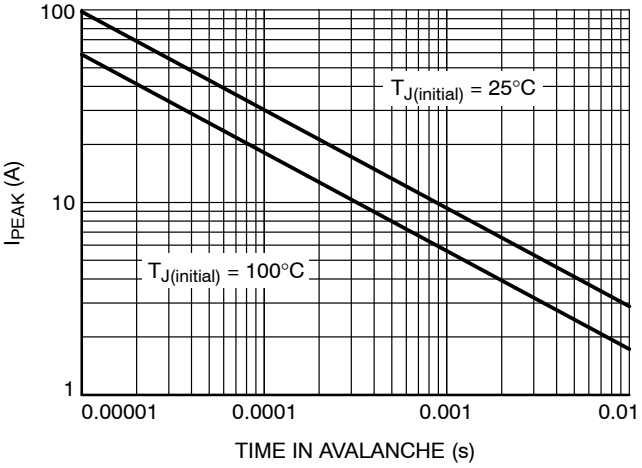

Figure 12. I_{PEAK} vs. Time in Avalanche

TYPICAL CHARACTERISTICS

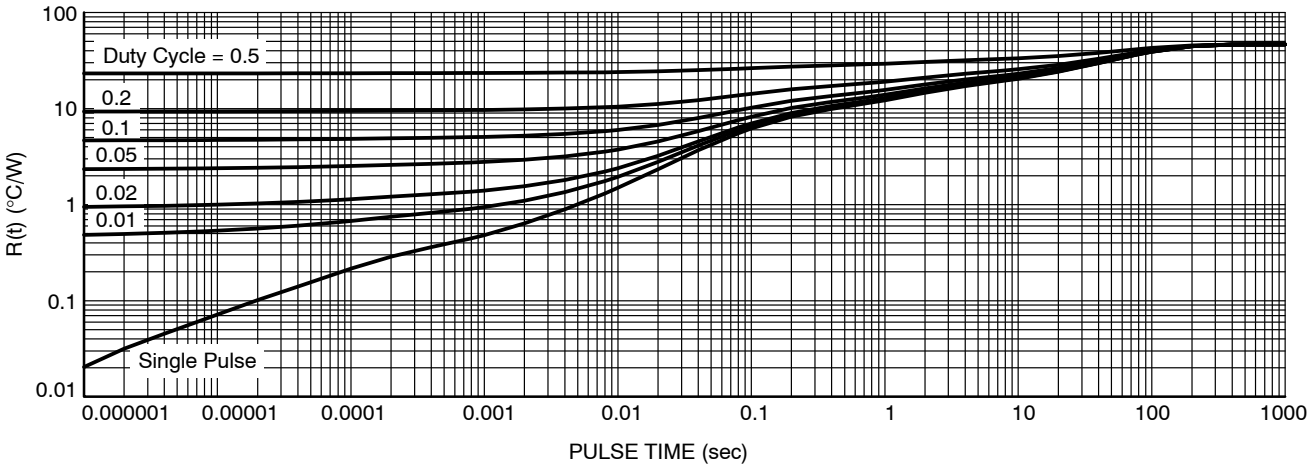

Figure 13. Thermal Characteristics

DEVICE ORDERING INFORMATION

Device	Marking	Package	Shipping†
NTTFS002N04CLTAG	02NL	WDFN8 (Pb−Free)	1500 / Tape & Reel

†For information on tape and reel specifications, including part orientation and tape sizes, please refer to our Tape and Reel Packaging Specifications Brochure, BRD8011/D.

PACKAGE DIMENSIONS

WDFN8 3.3x3.3, 0.65P
CASE 511DY
ISSUE A

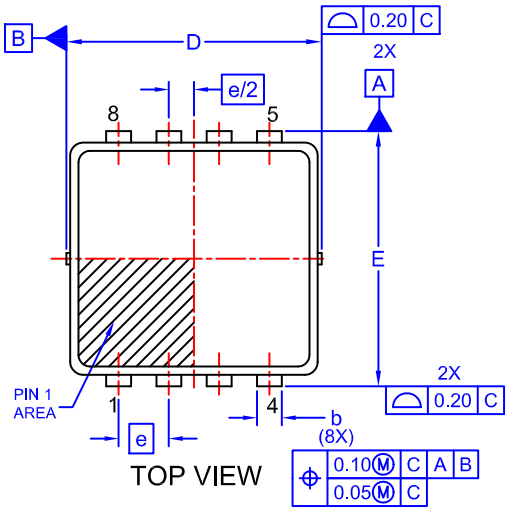

TOP VIEW

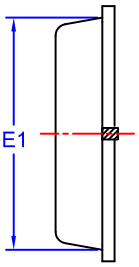

SIDE VIEW

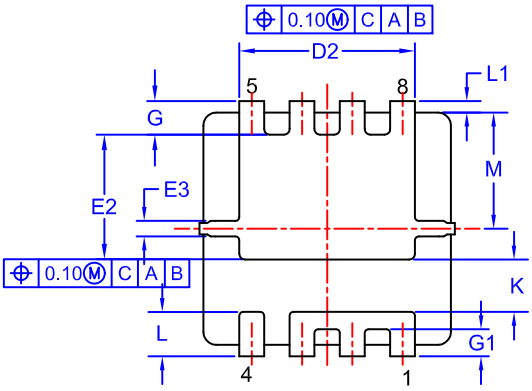

BOTTOM VIEW

NOTES:
1. CONTROLLING DIMENSION: MILLIMETERS
2. DIMENSIONS D1 & E1 DO NOT INCLUDE MOLD FLASH PROTRUSIONS NOR GATE BURRS.

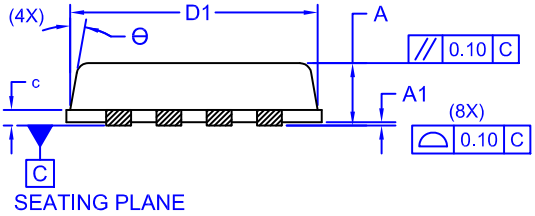

END VIEW

DIM	MILLIMETERS		
	MIN	NOM	MAX
A	0.70	0.75	0.80
A1	0.00	-	0.05
b	0.23	0.33	0.43
c	0.15	0.20	0.25
D	3.20	3.30	3.40
D1	2.95	3.13	3.30
D2	1.98	2.20	2.40
E	3.20	3.30	3.40
E1	2.80	3.00	3.15
E2	1.40	1.60	1.80
E3	0.15	0.25	0.40
e	0.65 BSC		
G	0.30	0.43	0.55
G1	0.25	0.35	0.45
K	0.55	0.75	0.95
L	0.35	0.52	0.65
L1	0.06	0.15	0.30
M	1.35	1.50	1.60
θ	0	-	12

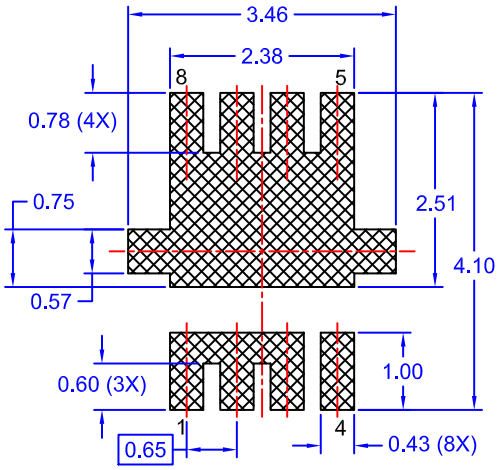

RECOMMENDED LAND PATTERN

ON Semiconductor and ON are trademarks of Semiconductor Components Industries, LLC dba ON Semiconductor or its subsidiaries in the United States and/or other countries. ON Semiconductor owns the rights to a number of patents, trademarks, copyrights, trade secrets, and other intellectual property. A listing of ON Semiconductor's product/patent coverage may be accessed at www.onsemi.com/site/pdf/Patent−Marking.pdf. ON Semiconductor reserves the right to make changes without further notice to any products herein. ON Semiconductor makes no warranty, representation or guarantee regarding the suitability of its products for any particular purpose, nor does ON Semiconductor assume any liability arising out of the application or use of any product or circuit, and specifically disclaims any and all liability, including without limitation special, consequential or incidental damages. Buyer is responsible for its products and applications using ON Semiconductor products, including compliance with all laws, regulations and safety requirements or standards, regardless of any support or applications information provided by ON Semiconductor. "Typical" parameters which may be provided in ON Semiconductor data sheets and/or specifications can and do vary in different applications and actual performance may vary over time. All operating parameters, including "Typicals" must be validated for each customer application by customer's technical experts. ON Semiconductor does not convey any license under its patent rights nor the rights of others. ON Semiconductor products are not designed, intended, or authorized for use as a critical component in life support systems or any FDA Class 3 medical devices or medical devices with a same or similar classification in a foreign jurisdiction or any devices intended for implantation in the human body. Should Buyer purchase or use ON Semiconductor products for any such unintended or unauthorized application, Buyer shall indemnify and hold ON Semiconductor and its officers, employees, subsidiaries, affiliates, and distributors harmless against all claims, costs, damages, and expenses, and reasonable attorney fees arising out of, directly or indirectly, any claim of personal injury or death associated with such unintended or unauthorized use, even if such claim alleges that ON Semiconductor was negligent regarding the design or manufacture of the part. ON Semiconductor is an Equal Opportunity/Affirmative Action Employer. This literature is subject to all applicable copyright laws and is not for resale in any manner.

PUBLICATION ORDERING INFORMATION

LITERATURE FULFILLMENT:
Literature Distribution Center for ON Semiconductor
19521 E. 32nd Pkwy, Aurora, Colorado 80011 USA
Phone: 303−675−2175 or 800−344−3860 Toll Free USA/Canada
Fax: 303−675−2176 or 800−344−3867 Toll Free USA/Canada
Email: orderlit@onsemi.com

N. American Technical Support: 800−282−9855 Toll Free USA/Canada
Europe, Middle East and Africa Technical Support:
Phone: 421 33 790 2910

ON Semiconductor Website: **www.onsemi.com**

Order Literature: http://www.onsemi.com/orderlit

For additional information, please contact your local Sales Representative

WDFN8 3.3x3.3, 0.65P
CASE 511DY
ISSUE A

DATE 21 AUG 2018

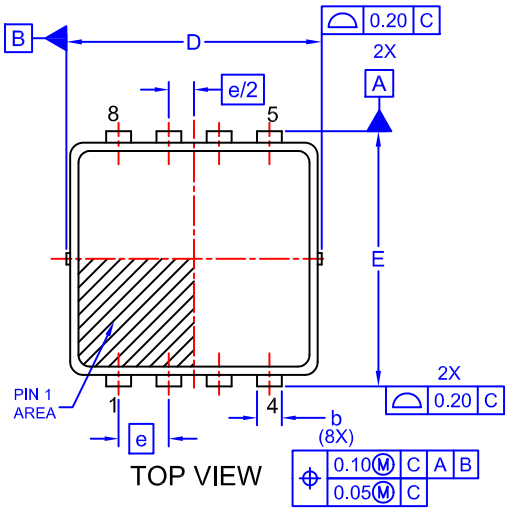

TOP VIEW

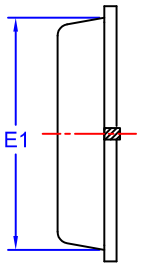

SIDE VIEW

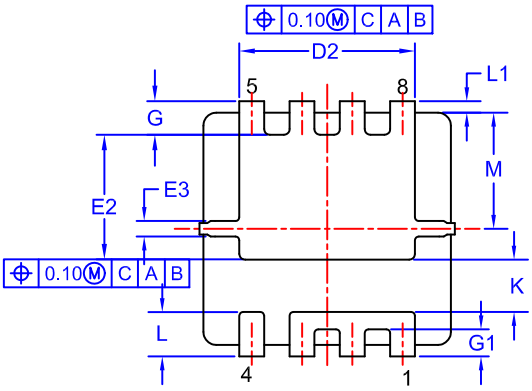

BOTTOM VIEW

NOTES:
1. CONTROLLING DIMENSION: MILLIMETERS
2. DIMENSIONS D1 & E1 DO NOT INCLUDE MOLD FLASH PROTRUSIONS NOR GATE BURRS.

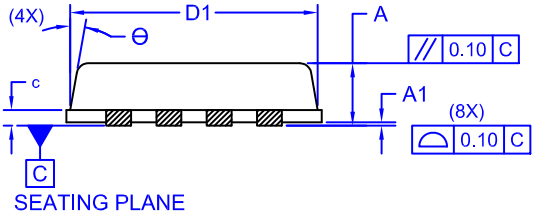

END VIEW

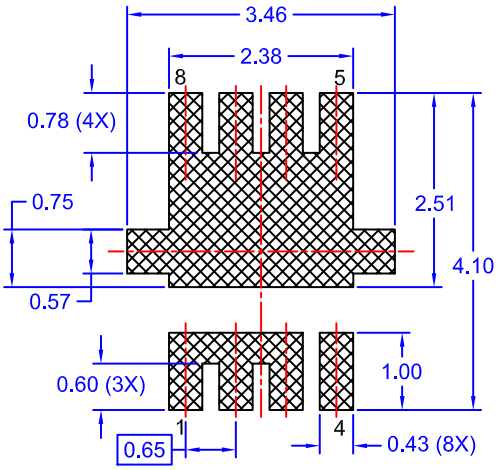

RECOMMENDED LAND PATTERN

GENERIC MARKING DIAGRAM*

XXXX = Specific Device Code
A = Assembly Location
Y = Year Code
WW = Work Week Code

*This information is generic. Please refer to device data sheet for actual part marking. Pb−Free indicator, "G" or microdot " ▪", may or may not be present. Some products may not follow the Generic Marking.

DIM	MILLIMETERS		
	MIN	NOM	MAX
A	0.70	0.75	0.80
A1	0.00	-	0.05
b	0.23	0.33	0.43
c	0.15	0.20	0.25
D	3.20	3.30	3.40
D1	2.95	3.13	3.30
D2	1.98	2.20	2.40
E	3.20	3.30	3.40
E1	2.80	3.00	3.15
E2	1.40	1.60	1.80
E3	0.15	0.25	0.40
e	0.65 BSC		
G	0.30	0.43	0.55
G1	0.25	0.35	0.45
K	0.55	0.75	0.95
L	0.35	0.52	0.65
L1	0.06	0.15	0.30
M	1.35	1.50	1.60
Θ	0	-	12

DOCUMENT NUMBER:	**98AON90827G**	Electronic versions are uncontrolled except when accessed directly from the Document Repository. Printed versions are uncontrolled except when stamped "CONTROLLED COPY" in red.
DESCRIPTION:	**WDFN8 3.3x3.3, 0.65P**	**PAGE 1 OF 1**

ON Semiconductor and ON are trademarks of Semiconductor Components Industries, LLC dba ON Semiconductor or its subsidiaries in the United States and/or other countries. ON Semiconductor reserves the right to make changes without further notice to any products herein. ON Semiconductor makes no warranty, representation or guarantee regarding the suitability of its products for any particular purpose, nor does ON Semiconductor assume any liability arising out of the application or use of any product or circuit, and specifically disclaims any and all liability, including without limitation special, consequential or incidental damages. ON Semiconductor does not convey any license under its patent rights nor the rights of others.

onsemi, onsemi, and other names, marks, and brands are registered and/or common law trademarks of Semiconductor Components Industries, LLC dba "**onsemi**" or its affiliates and/or subsidiaries in the United States and/or other countries. **onsemi** owns the rights to a number of patents, trademarks, copyrights, trade secrets, and other intellectual property. A listing of **onsemi**'s product/patent coverage may be accessed at www.onsemi.com/site/pdf/Patent−Marking.pdf. **onsemi** reserves the right to make changes at any time to any products or information herein, without notice. The information herein is provided "as−is" and **onsemi** makes no warranty, representation or guarantee regarding the accuracy of the information, product features, availability, functionality, or suitability of its products for any particular purpose, nor does **onsemi** assume any liability arising out of the application or use of any product or circuit, and specifically disclaims any and all liability, including without limitation special, consequential or incidental damages. Buyer is responsible for its products and applications using **onsemi** products, including compliance with all laws, regulations and safety requirements or standards, regardless of any support or applications information provided by **onsemi**. "Typical" parameters which may be provided in **onsemi** data sheets and/or specifications can and do vary in different applications and actual performance may vary over time. All operating parameters, including "Typicals" must be validated for each customer application by customer's technical experts. **onsemi** does not convey any license under any of its intellectual property rights nor the rights of others. **onsemi** products are not designed, intended, or authorized for use as a critical component in life support systems or any FDA Class 3 medical devices or medical devices with a same or similar classification in a foreign jurisdiction or any devices intended for implantation in the human body. Should Buyer purchase or use **onsemi** products for any such unintended or unauthorized application, Buyer shall indemnify and hold **onsemi** and its officers, employees, subsidiaries, affiliates, and distributors harmless against all claims, costs, damages, and expenses, and reasonable attorney fees arising out of, directly or indirectly, any claim of personal injury or death associated with such unintended or unauthorized use, even if such claim alleges that **onsemi** was negligent regarding the design or manufacture of the part. **onsemi** is an Equal Opportunity/Affirmative Action Employer. This literature is subject to all applicable copyright laws and is not for resale in any manner.

PUBLICATION ORDERING INFORMATION

LITERATURE FULFILLMENT:
Email Requests to: orderlit@onsemi.com

onsemi Website: www.onsemi.com

TECHNICAL SUPPORT
North American Technical Support:
Voice Mail: 1 800−282−9855 Toll Free USA/Canada
Phone: 011 421 33 790 2910

Europe, Middle East and Africa Technical Support:
Phone: 00421 33 790 2910
For additional information, please contact your local Sales Representative

◊