INDEX

PAGE TITLE	PAGE
TITLE BLOCK	1
REVISION BLOCK	2
PART BLOCK	3
KPC BLOCK	4
COMPONENT TABLE	5
NOTES	6
NOTES	7
WIRE DRESS PACKAGING DIMENSIONS	8
LOCATION AND PACKAGING DIMENSIONS REFERENCING INTERFACE DATUMS B & C	9
LOCATION AND PACKAGING DIMENSIONS REFERENCING INTERFACE DATUM A	10
KEY ID REF - WIRE DRESS OPTION 0	11
KEY ID REF - WIRE DRESS OPTION 9	12
CIRCUIT CONFIGURATIONS	13
CIRCUIT CONFIGURATIONS	14
COMPONENT CONNECTOR INTERFACE	15
COMPONENT CONNECTOR INTERFACE	16
COMPONENT CONNECTOR INTERFACE	17
COMPONENT CONNECTOR INTERFACE	18
COMPONENT CONNECTOR INTERFACE	19
COMPONENT CONNECTOR INTERFACE	20
COMPONENT CONNECTOR INTERFACE	21

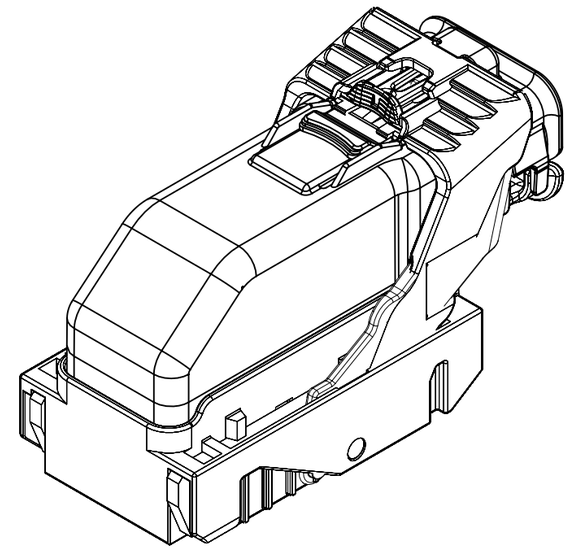

ISO VIEW

GM

UNLESS OTHERWISE SPECIFIED: THIS DOCUMENT IS IN ACCORDANCE WITH ASME Y14.5M-1994 AS AMMENDED BY THE GM GLOBAL DIMENSIONING AND TOLERANCING ADDENDUM-1997. ALL GEOMETRIC TOLERANCES AND RELATED DATUMS APPLY RFS. RULE #1 (PERFECT FORM AT MMC) DOES NOT APPLY WHEN A RELATIONSHIP BETWEEN FEATURES IS ESTABLISHED BY ORIENTATION OR LOCATION TOLERANCES. SEPARATE POSITION CALLOUTS MAY BE GAGED SEPARATELY REGARDLESS OF DATUM REFERENCES.

UG

CHANGE RESTRICTED
NO MANUAL CHANGES

DO NOT SCALE

METRIC

DIMENSIONS SHOWN IN MILLIMETERS UNLESS OTHERWISE SPECIFIED

REFERENCE
12H (MOLEX AUTOMOTIVE)

		DATE
DRAFTER	J SZYMKOWSKI	22DE05
APVD1	D PFAFFINGER	22DE05
APVD2	B BURT	22DE05
APVD3		
APVD4		
APVD5		

DRAWING NAME
HARNESS CONN ASM
66/73/80 CKTS

DRAWING NUMBER
12642695

DWG STATUS		
ST	REV	PDI
R	002	

PAGE NUMBER
1 OF 21

PAGE	DWG STATUS					REVISION HISTORY	AUTH	DR	CK	ENG
	DATE	ST	REV	CHG	PDI					
	19DE11	R	001			RELEASED TO PRODUCTION AT DLS A	CRMRJB	SC	MRO	GF
3	08MY15	R	002	A		REORDERED PART BLOCK AND ADDED MASS CORRECTED P/N TYPO FROM 12562676 TO 12582676				
3, 5		R	002	B		ADDED 12659312, 12659313, 12653574 AND 12653575				
6		R	002	C		REMOVED NOTE 1 . D . 3 . C				
20		R	002	D		DIM 125 WAS 3.25 DIM 131 WAS 5.5	CRMRJD	DFK	MRO	GF

PAGE	DWG STATUS					REVISION HISTORY	AUTH	DR	CK	ENG
	DATE	ST	REV	CHG	PDI					

GM	PAGE TITLE REVISION BLOCK	DRAWING NUMBER 12642695	DWG STATUS ST: R REV: 002 PDI:	PAGE NUMBER 2 OF 21

002A 002B

HIERARCHY /QUANTITY	DWG ITM	DWG RLTN SHIP	PART NUMBER	P-A ITM	DLS	ST	REV	PDI	NMCI	MASS (KG)	PART NAME	NOTES
	30	RD	12582676			C	003			0.011	WIRE HARNESS COVER	66/73/80 WAY
	29	RD	AMJ29214			C	003			0.050	HARN CONN ASM 80 CKT	KEY M OPTION 9
	28	RD	AMJ29136			C	003			0.050	HARN CONN ASM 80 CKT	KEY L OPTION 9
	27	RD	AMJ29117			C	003			0.050	HARN CONN ASM 80 CKT	KEY K OPTION 9
	26	RD	12615657			C	003			0.050	HARN CONN ASM 80 CKT	KEY J OPTION 9
	25	RD	12603599			C	003			0.050	HARN CONN ASM 80 CKT	KEY H OPTION 9
	24	RD	12603598			C	003			0.050	HARN CONN ASM 80 CKT	KEY G OPTION 9
	23	RD	AMJ28669			C	003			0.050	HARN CONN ASM 80 CKT	KEY M OPTION 0
	22	RD	AMJ29057			C	003			0.050	HARN CONN ASM 80 CKT	KEY L OPTION 0
	21	RD	AMJ28595			C	003			0.050	HARN CONN ASM 80 CKT	KEY K OPTION 0
	20	RD	12615656			C	003			0.050	HARN CONN ASM 80 CKT	KEY J OPTION 0
	19	RD	12588058			C	004			0.050	HARN CONN ASM 80 CKT	KEY H OPTION 0
	18	RD	12588057			C	003			0.050	HARN CONN ASM 80 CKT	KEY G OPTION 0
	17	RD	12653575			C	002			0.050	HARN CONN ASM 73 CKT	KEY F OPTION 9
	16	RD	AMJ28698			C	003			0.050	HARN CONN ASM 73 CKT	KEY E OPTION 9
	15	RD	12647269			C	002			0.050	HARN CONN ASM 73 CKT	KEY D OPTION 9
	14	RD	12615655			C	003			0.050	HARN CONN ASM 73 CKT	KEY C OPTION 9
	13	RD	12603597			C	005			0.050	HARN CONN ASM 73 CKT	KEY B OPTION 9
	12	RD	12603596			C	006			0.050	HARN CONN ASM 73 CKT	KEY A OPTION 9
	11	RD	12653574			C	002			0.050	HARN CONN ASM 73 CKT	KEY F OPTION 0
	10	RD	AMJ28633			C	003			0.050	HARN CONN ASM 73 CKT	KEY E OPTION 0
	09	RD	12647268			C	002			0.050	HARN CONN ASM 73 CKT	KEY D OPTION 0
	08	RD	12615654			C	005			0.050	HARN CONN ASM 73 CKT	KEY C OPTION 0
	07	RD	12582678			C	008			0.050	HARN CONN ASM 73 CKT	KEY B OPTION 0
	06	RD	12582677			C	010			0.050	HARN CONN ASM 73 CKT	KEY A OPTION 0
	05	RD	12659313			2	001			0.050	HARN CONN ASM 66 CKT	KEY C OPTION 9
	04	RD	12642693			C	002			0.050	HARN CONN ASM 66 CKT	KEY A OPTION 9
	03	RD	12659312			2	001			0.050	HARN CONN ASM 66 CKT	KEY C OPTION 0
	02	RD	12642692			C	003			0.050	HARN CONN ASM 66 CKT	KEY A OPTION 0
	01	RD	12642695		A		002			3.408	HARNESS CONN ASM	
											DRAWING	

PARTS SHOWN ON DRAWING

GM

PAGE TITLE
PART BLOCK

DRAWING NUMBER
12642695

DWG STATUS		
ST	REV	PDI
R	002	

PAGE NUMBER
3 OF 21

KEY PRODUCT CHARACTERISTICS
(IN ACCORDANCE WITH QN 1805 OR QN 1050)

▽ SAFETY/COMPLIANCE	TOTAL ON DRAWING	5
◇ FIT/FUNCTION	LAST NO. USED	5

NO	TYPE	DESCRIPTION	RATIONALE	PAGE/ZONE
1	F/F	32.68	IMPROVE CONNECTOR SYSTEM MATING	15
2	F/F	29.00	INSURE PROPER RELEASE OF LEVER	15
3	F/F	15.25	INSURE FINAL MATE POSITION	16
5	F/F	POSITIONAL TOLERANCE (2 PLACES)	INSURE CONNECTOR SYSTEM MATEABILITY	19

					APPLICABLE COMPONENTS					
LINE	MFG.	MFG. P/N	GM P/N	EFFECTIVE DATE	DESCRIPTION	KEY OPTION	WIRE DRESS OPTION	KEY CONFIG.	COLOR	STATUS
-										
1	MOLEX	34565-0003	12582676	02JN03	MX123 DRESS COVER 66/73/80 CKT	N/A	N/A	N/A	BLACK	AVAILABLE
2	MOLEX	34822-0013	12642692	01SP13	MX123 HRNS CONN ASSY 66 CKT	A	0	1458	BLACK	AVAILABLE
3	MOLEX	34822-0033	12659312	01SP13	MX123 HRNS CONN ASSY 66 CKT	C	0	2467	BLUE	AVAILABLE
4	MOLEX	34822-0023	12642693	01SP13	MX123 HRNS CONN ASSY 66 CKT	A	9	1458	BLACK	AVAILABLE
5	MOLEX	34822-0043	12659313	01SP13	MX123 HRNS CONN ASSY 66 CKT	C	9	2467	BLUE	AVAILABLE
6	MOLEX	34566-0103	12582677	11JN04	MX123 HRNS CONN ASSY 73 CKT	A	0	1458	BLACK	AVAILABLE
7	MOLEX	34566-0203	12582678	11JN04	MX123 HRNS CONN ASSY 73 CKT	B	0	1468	ST GRAY	AVAILABLE
8	MOLEX	34566-0303	12615654	09AP08	MX123 HRNS CONN ASSY 73 CKT	C	0	2467	BLUE	AVAILABLE
9	MOLEX	34566-0403	12647268	T.B.D	MX123 HRNS CONN ASSY 73 CKT	D	0	2367	BROWN	NOT ACTIVE
10	MOLEX	34566-0503	AMJ28633	T.B.D	MX123 HRNS CONN ASSY 73 CKT	E	0	2468	GREEN	NOT ACTIVE
11	MOLEX	34566-0603	12653574	05DC14	MX123 HRNS CONN ASSY 73 CKT	F	0	1357	NATURAL	AVAILABLE
12	MOLEX	34566-0703	12588057	09AP08	MX123 HRNS CONN ASSY 80 CKT	G	0	1358	BLUE	AVAILABLE
13	MOLEX	34566-0803	12588058	11JN04	MX123 HRNS CONN ASSY 80 CKT	H	0	2458	ST GRAY	AVAILABLE
14	MOLEX	34566-0903	12615656	T.B.D	MX123 HRNS CONN ASSY 80 CKT	J	0	2457	BLACK	NOT ACTIVE
15	MOLEX	34566-1003	AMJ28595	T.B.D	MX123 HRNS CONN ASSY 80 CKT	K	0	2357	BROWN	NOT ACTIVE
16	MOLEX	34566-1103	AMJ29057	T.B.D	MX123 HRNS CONN ASSY 80 CKT	L	0	2368	GREEN	NOT ACTIVE
17	MOLEX	34566-1203	AMJ28669	T.B.D	MX123 HRNS CONN ASSY 80 CKT	M	0	2358	NATURAL	NOT ACTIVE
18	MOLEX	34566-1303	12603596	11JN04	MX123 HRNS CONN ASSY 73 CKT	A	9	1458	BLACK	AVAILABLE
19	MOLEX	34566-1403	12603597	11JN04	MX123 HRNS CONN ASSY 73 CKT	B	9	1468	ST GRAY	AVAILABLE
20	MOLEX	34566-1503	12615655	09AP08	MX123 HRNS CONN ASSY 73 CKT	C	9	2467	BLUE	AVAILABLE
21	MOLEX	34566-1603	12647269	T.B.D	MX123 HRNS CONN ASSY 73 CKT	D	9	2367	BROWN	NOT ACTIVE
22	MOLEX	34566-1703	AMJ28698	T.B.D	MX123 HRNS CONN ASSY 73 CKT	E	9	2468	GREEN	NOT ACTIVE
23	MOLEX	34566-1803	12653575	05DC14	MX123 HRNS CONN ASSY 73 CKT	F	9	1357	NATURAL	AVAILABLE
24	MOLEX	34566-1903	12603598	09AP08	MX123 HRNS CONN ASSY 80 CKT	G	9	1358	BLUE	AVAILABLE
25	MOLEX	34566-2003	12603599	11JN04	MX123 HRNS CONN ASSY 80 CKT	H	9	2458	ST GRAY	AVAILABLE
26	MOLEX	34566-2103	12615657	T.B.D	MX123 HRNS CONN ASSY 80 CKT	J	9	2457	BLACK	NOT ACTIVE
27	MOLEX	34566-2203	AMJ29117	T.B.D	MX123 HRNS CONN ASSY 80 CKT	K	9	2357	BROWN	NOT ACTIVE
28	MOLEX	34566-2303	AMJ29136	T.B.D	MX123 HRNS CONN ASSY 80 CKT	L	9	2368	GREEN	NOT ACTIVE
29	MOLEX	34566-2403	AMJ29214	T.B.D	MX123 HRNS CONN ASSY 80 CKT	M	9	2358	NATURAL	NOT ACTIVE
30	MOLEX	34736-2002	12642697	01AU10	MX64 RCPT TERM Ag 18/20 GAGE B (RIGHT PAYOFF)	N/A	N/A	N/A	N/A	AVAILABLE
31	MOLEX	34736-2001	12642696	01AU10	MX64 RCPT TERM Ag 22 GAGE B (RIGHT PAYOFF)	N/A	N/A	N/A	N/A	AVAILABLE
32	MOLEX	34586-0001	T.B.D.	11JN04	MX123 0.64MM GROMMET PLUG	N/A	N/A	N/A	NATURAL	AVAILABLE
33	YAZAKI	7116-4150-02	12588066	02JN03	2.8mm YESC SEALED FEMALE TERMINAL TIN 20/22 GAGE (CABLE RANGE 0.30mm-0.60mm)	N/A	N/A	N/A	N/A	NOT ACTIVE
34	YAZAKI	7116-4151-02	12588067	02JN03	2.8mm YESC SEALED FEMALE TERMINAL TIN 16/18 GAGE (CABLE RANGE 0.75mm-1.40mm)	N/A	N/A	N/A	N/A	NOT ACTIVE
35	YAZAKI	7116-4152-02	12582685	02JN03	2.8mm YESC SEALED FEMALE TERMINAL TIN 14 GAGE (CABLE RANGE 1.50mm-2.50mm)	N/A	N/A	N/A	N/A	AVAILABLE
36	YAZAKI	7158-3111-60	12588068	02JN03	2.8mm CABLE SEAL (wire O.D. range 1.20mm-1.90mm)	N/A	N/A	N/A	GREEN	NOT ACTIVE
37	YAZAKI	7158-3112-70	12588069	02JN03	2.8mm CABLE SEAL (wire O.D. range 1.80mm-2.30mm)	N/A	N/A	N/A	YELLOW	NOT ACTIVE
38	YAZAKI	7158-3113-40	12582686	02JN03	2.8mm CABLE SEAL (wire O.D. range 2.18mm-3.00mm)	N/A	N/A	N/A	WHITE	AVAILABLE
39	YAZAKI	7158-3114-90	T.B.D	02JN03	2.8mm YESC CAVITY PLUG	N/A	N/A	N/A	BLUE	AVAILABLE
40	MOLEX	63811-4200	XX019825	02JN03	MX64 TERM HAND CRIMP TOOL	N/A	N/A	N/A	N/A	AVAILABLE
41	MOLEX	63813-1400	XX019826	02JN03	MX64 TERM SERVICE TOOL	N/A	N/A	N/A	N/A	AVAILABLE
42	MOLEX	63865-8000	XX019827	02JN03	MX64 CRIMP APPLICATOR with TOOL KIT 18/20 GAGE PAYOFF DIRECTION D (left payoff) (contact Molex for payoff detail)	N/A	N/A	N/A	N/A	AVAILABLE
43	MOLEX	63865-8070	XX019828	02JN03	MX64 APPLICATOR TOOL KIT 18/20 GAGE	N/A	N/A	N/A	N/A	AVAILABLE
44	MOLEX	63865-8100	XX019829	02JN03	MX64 CRIMP APPLICATOR with TOOL KIT 22 GAGE PAYOFF DIRECTION D (left payoff) (contact Molex for payoff detail)	N/A	N/A	N/A	N/A	AVAILABLE
45	MOLEX	63865-8170	XX019830	02JN03	MX64 APPLICATOR TOOL KIT 22 GAGE	N/A	N/A	N/A	N/A	AVAILABLE
46	SPX	J35616-64	T.B.D.	02JN03	0.64mm PROBE TOOL (for rcpt)	N/A	N/A	N/A	N/A	AVAILABLE
47	SPX	J35616-64A	T.B.D.	02JN03	0.64mm PROBE TOOL WITH EXT (for rcpt)	N/A	N/A	N/A	N/A	AVAILABLE
48	SPX	J35616-65	T.B.D.	02JN03	0.64mm PROBE TOOL WITH EXT (for pin)	N/A	N/A	N/A	N/A	AVAILABLE
49	SPX	J35616-4A	T.B.D.	02JN03	2.8mm PROBE TOOL (for rcpt)	N/A	N/A	N/A	N/A	AVAILABLE
50	YAZAKI	X39899-J374	12094430	02JN03	2.8mm TERM SERVICE TOOL	N/A	N/A	N/A	N/A	AVAILABLE

002B

* - MX123 DRESS COVER 73/80/66 CKT MATES TO ANY MX123 HARN CONN ASSY SHOWN ON TABLE ABOVE

NOTES: UNLESS OTHERWISE SPECIFIED

1. MATERIAL FOR INTERFACE:

A. RESIN:
   1. 30% G.F. PBT; 20% MAX. (BY WEIGHT) REGRIND.
   2. MATING CONNECTOR INTERFACE PART COLOR MUST BE SAME AS MATCHING KEYED HARNESS CONNECTOR ASSEMBLY.
   3. MUST BE VALIDATED FOR INDIVIDUAL DEVICE APPLICATION REQUIREMENTS.

B. 0.64MM PINS:
   1. BASE MATERIAL: COPPER ALLOY; CONDUCTIVITY >= 28% IACS AT 20°C; TENSILE STRENGTH >= 635 N/mm²;SURFACE ROUGHNESS R_a 6 MAX.
   2. PLATING FINISH: SILVER (Ag). PLATING TO BE 1.9-3.3 um ELECTRODEPOSITED SEMI-BRIGHT SILVER OVER 1.25-2.25 um DUCTILE SULPHAMATE NICKEL PER NOTE 1(D).
   3. ANTI-TARNISH: SYNTHETIC HYDROCARBON CONTACT SURFACE FINISH OR EQUIVALENT APPLIED WITHOUT VOID TO CONTACT AREA (MIN 3.7mm FROM PIN TIP).

C. 2.8MM BLADE:
   1. BASE MATERIAL: COPPER ALLOY; CONDUCTIVITY>= 28% IACS AT 20°C; TENSILE STRENGTH >= 350 N/mm²; SURFACE ROUGHNESS R_a 6 MAX.
   2. PLATING FINISH: TIN. PLATING TO BE 2.5-5.0 um ELECTRODEPOSITED TIN, MATTE FINISH OVER 1.25-2.5um DUCTILE SULPHAMATE NICKEL PER NOTE 1(D).

D. PLATING REQUIREMENTS:

   1. SILVER PLATING
      a. 99.5% PURE SEMI-BRIGHT WITH NO ORGANIC BRIGHTNERS OR CHROMATES.

   2. NICKEL PLATING
      a. ELECTRODEPOSITED DUCTILE SULFAMATE NICKEL WITH A NON-BRIGHTENED FINISH. NO ORGANIC OR BRIGHTENING AGENTS SHALL BE ALLOWED.
      b. SHALL ONLY BE USED AS AN UNDERLYING PLATING AND MAY NOT BE USED AS AN ELECTRICAL CONTACT SURFACE PLATING.
      c. SHALL BE NODULE FREE WHEN VIEWED AT 10X MAGNIFICATION IN MEASURED IN CONTACT SURFACE AREA PLUS 0.5MM PERIMETER AROUND THE CONTACT SURFACE AREA.
      d. ALL PLATINGS SHALL HAVE A 1.0% MAXIMUM BY WEIGHT IMPURITIES. IMPURITIES ARE DEFINED AS ALL ELEMENTS NOT THE PRIMARY PLATING OR HARDENING AGENT IF APPLICABLE, AS DETERMINED BY WET CHEMICAL ANALYSIS OR AUGER METHOD. NO SINGLE IMPURITY SHALL EXCEED 0.1% MAXIMUM BY WEIGHT.

   3. TESTING
      a. THICKNESS TO BE MEASURED IN CONTACT SURFACE AREA PLUS 0.5MM PERIMETER AROUND THE CONTACT SURFACE AREA AS DESIGNATED IN THE DRAWING. THICKNESS SHALL BE DETERMINED BY METHOD OF X-RAY (XRF).
      b. PLATING ADHESION SHALL BE TESTED BY A BEND TEST FOR ALL METALS. THE TEST SAMPLE SHALL BE BENT 90 DEGREES TO DETERMINE DEPOSIT ADHESION. TESTING SHALL BE COMPLETED IN ACCORDANCE WITH ASTM SPEC B571.

002C

2. DESIGN - GENERAL:

A. THIS IS A 100% CAD GENERATED PART. THE CAD MATHEMATICAL DATA IS THE MASTER FOR THIS PART. FOR DIMENSIONAL OR ANY INFORMATION NOT SHOWN ON THIS DRAWING, ANALYZE THE CAD MODEL.
B. TOLERANCES:
   1. LINEAR 0.X ± 0.30
              0.XX ± 0.10
              0.XXX ± 0.10
   2. ANGULAR X° ± 3°
   3. | ⌓ | 1.0 | A | B | C |
C. MINIMUM WALL THICKNESS REQUIRED: 1.3mm.
D. CORNERS SHOWN AS SHARP TO BE R 0.2 MAX.
E. LETTERING SHALL BE 0.15 MAX RAISED IN 0.20 MAX RECESS PAD. THIS INCLUDES MATERIAL CODE, RECYCLING CODE, CAVITY ID AND DATE CODE.
F-1. PARTS MUST BE FREE OF DISCOLORATION, SALT RESIDUE AND OTHER IMPERFECTIONS THAT AFFECT FIT OR FUNCTION.
F-2. SCRATCHES OR DENTS NOT TO EXCEED 0.013mm IN DEPTH.
G. FOLLOWING PRODUCTION CODES TO BE PERMANENTLY MARKED & HUMAN READABLE TO A LETTER HEIGHT OF 1.5 ±0.5MM X 0.3 MAX DEEP
   1. MATERIAL #: XXXXX-XXXX
   2. DATE CODE: JJJY (JULIAN DAY, LAST DIGIT OF YEAR)
   3. INSPECTION MACHINE CODE + SERIAL #: X_XXXXX

3. DESIGN - MANUFACTURING:

A. DRAFT TO BE WITHIN TOLERANCE.
B. ALLOWABLE FLASH MAX 0.2 HIGH X MAX 0.13 THICK.
C. ALLOWABLE PARTING LINE MISMATCH 0.2 MAX.
D. EJECTOR PINS MARK TO BE FLUSH TO 0.25 MAX DEPRESSED.
E. ALLOWABLE GATE VESTIGE FLUSH TO 0.25 MAX PROTRUSION.
F. NO EXTERNAL MOLD RELEASE AGENT ALLOWED DURING MANUFACTURING.
G. STEEL THAT FORMS THE INDICATED SURFACE MUST BE POLISHED WITH A DIAMOND FINISH (SPI A-2) OVER THE FULL PERIPHERY OF THE TOOL. SURFACE MUST HAVE NO MISMATCH.
H. ANY PROCESS LUBRICANT REMAINING ON THE TERMINAL MUST NOT VARNISH OR DEGRADE IT'S ELECTRICAL PERFORMANCE UP TO A MAXIMUM CLASS AMBIENT TEMPERATURE PER SAE USCAR-2 FOR 1008 HOURS. PROCESS LUBRICANTS SHOULD BE APPROVED BY THE RESPONSIBLE ENGINEER.
J. OPTIONAL FEATURES PROVIDED FOR AUTOMATION.
K. PART MUST BE FREE FROM BURRS AND SHARP EDGES, WHICH MIGHT BE DETRIMENTAL TO SATISFACTORY ASSEMBLY, SAFE HANDLING OR FUNCTION OF PART.
L. PARTS AS DELIVERED TO ASSEMBLY SHALL BE CLEAN AND FREE OF DEBRIS, RESIDUAL ABRASIVE MATERIAL AND CORROSION PRODUCTS ADVERESLY AFFECTING FUNCTION OR APPEARENCE.
M. RESTRICTED AND REPORTABLE SUBSTANCES FOR PARTS PER GMW3059.

NOTES: UNLESS OTHERWISE SPECIFIED

4. SYSTEM REQUIREMENTS:

   A. HARNESS CONNECTOR IS COMPATIBLE WITH THE FOLLOWING SAE WIRE SIZE NO'S:
      14, MEETING SAE J1128
      18, MEETING SAE J1128, MAX O.D. OF 2.06 MM
      20, MEETING SAE J1128
      22, MEETING SAE J1128, MIN O.D. OF 1.47 MM

   B. CABLE TIE SPECIFICATIONS:
      1. CABLE TIE:
         TENSILE RATING: 220N / (50lbs) MIN
         TIE LENGTH: 186mm MIN
         TIE WIDTH: 4.75mm MAX
         MATERIAL: NYLON
      2. INSTALLATION:
         CABLE TIE TENSION: 190N MIN
      3. DRESSED WIRE BUNDLE PACKAGING: SEE FIG. 1

   C. WHEN MATED WITH COMPONENT CONNECTOR INTERFACE AND/OR DRESS COVER, HARNESS CONNECTOR SYSTEM CONFORMS TO THE FOLLOWING:
      1. SAE/USCAR-2, REV: 3 APRIL, 2001; CLASS 3
      2. FIELD CORRELATED LIFE TEST, SAE/USCAR-20, NOV. 2001
      3. GMW #3191 AUGUST 22, 2000 (DRAFT); TEMPERATURE CLASS 3, SEALING CLASS 1, VIBRATION CLASS 2
      4. RESTRICTED AND REPORTABLE CHEMICALS PER GMW #3059, REV: D AUGUST 2002
      5. TPA USER FORCES (FULLY POPULATED WITH TERMINALS)
         a. REMOVAL FROM LOCK TO PRE-SET: <=120N

   D. WIRE SPECIFICATIONS:
      1. WIRE SURFACE MUST BE FREE OF SCRATCHES, GROOVES OR DENTS WHERE FUNCTIONAL

5. TERMINAL CURRENT RATINGS:

   ALL TESTING DONE IN ACCORDANCE WITH USCAR-2 REV5 SECTION 5.3

   A. MX64 RCPT TERM
      1. MX64 RCPT TERM Ag 18/20 GAGE CRIMPED TO SAE WIRE SIZE NO.18 AND MATED TO MX123 0.64MM PIN: 11.3 AMPS
      2. MX64 RCPT TERM Ag 22 GAGE CRIMPED TO SAE WIRE SIZE NO.22 AND MATED TO MX123 0.64MM PIN:8.5 AMPS

WIRE	CURRENT RATING			
	23'C	85'C	105'C	125'C
18AWG	11.3A	11.3A	9.5A	6.6A
20AWG	10.0A	10.0A	8.3A	5.7A
22AWG	8.6A	8.6A	7.1A	5.0A

   B. 2.8MM RCPT TERM
      1. 2.8MM RCPT TERM TIN 14 GAGE CRIMPED TO SAE WIRE SIZE NO.14 AND MATED TO MX123 2.8MM BLADE: 25.6 AMPS

6. CONTACT MOLEX AUTOMOTIVE FOR AVAILABLE CUSTOM PATTERNS OF CAVITIES OPEN FOR CIRCUITS

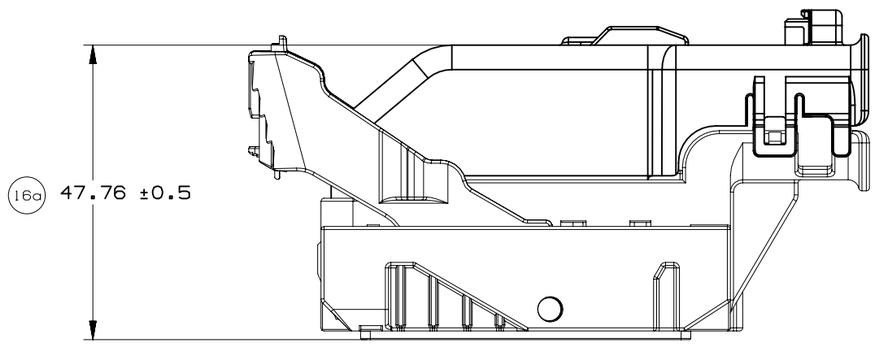

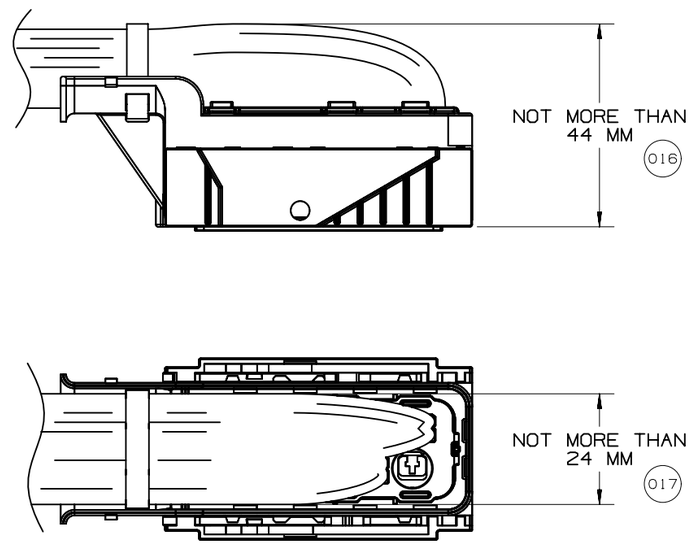

Fig. 1

GM	PAGE TITLE WIRE DRESS PACKAGING DIMENSIONS		DRAWING NUMBER 12642695	DWG STATUS			PAGE NUMBER
				ST	REV	PDI	
				R	002		8 OF 21

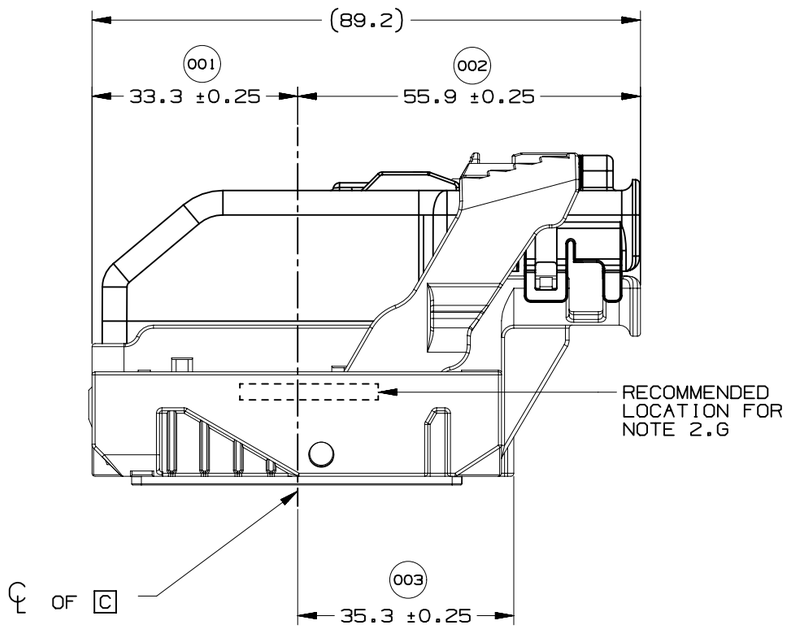

WIRE DRESS OPTION 0 SHOWN

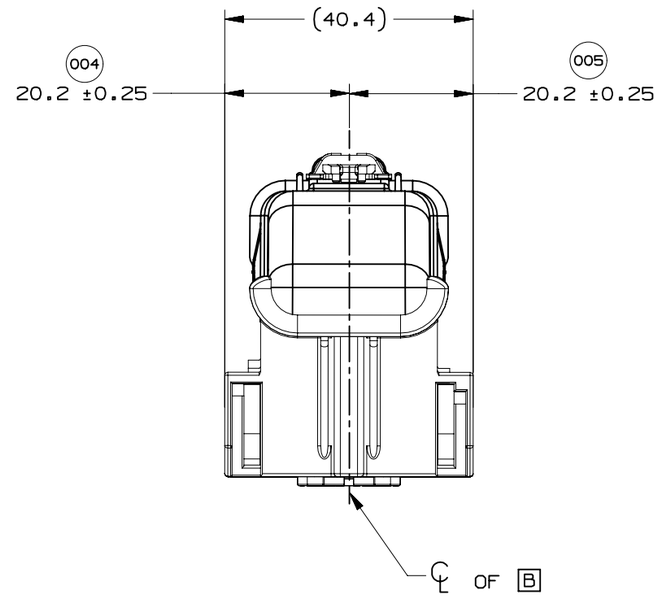

WIRE DRESS OPTION 0 SHOWN

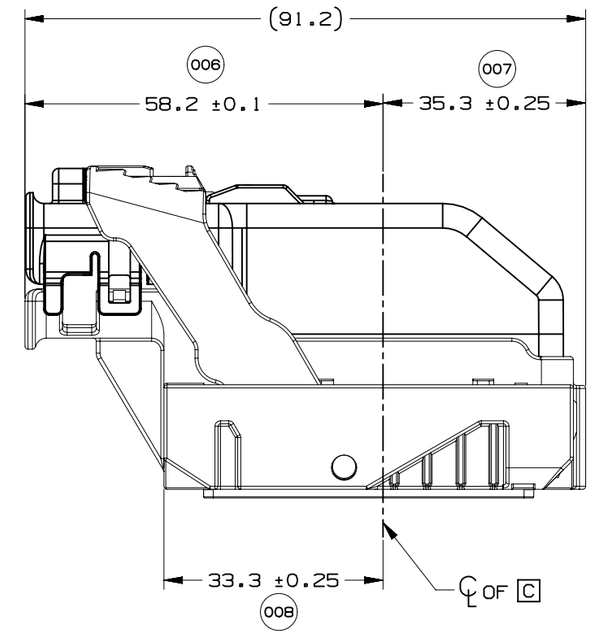

WIRE DRESS OPTION 9 SHOWN

	GM	PAGE TITLE LOCATION AND PACKAGING DIMENSIONS REFERENCING INTERFACE DATUMS B & C		DRAWING NUMBER 12642695	DWG STATUS ST: R REV: 002 PDI:	PAGE NUMBER 9 OF 21	

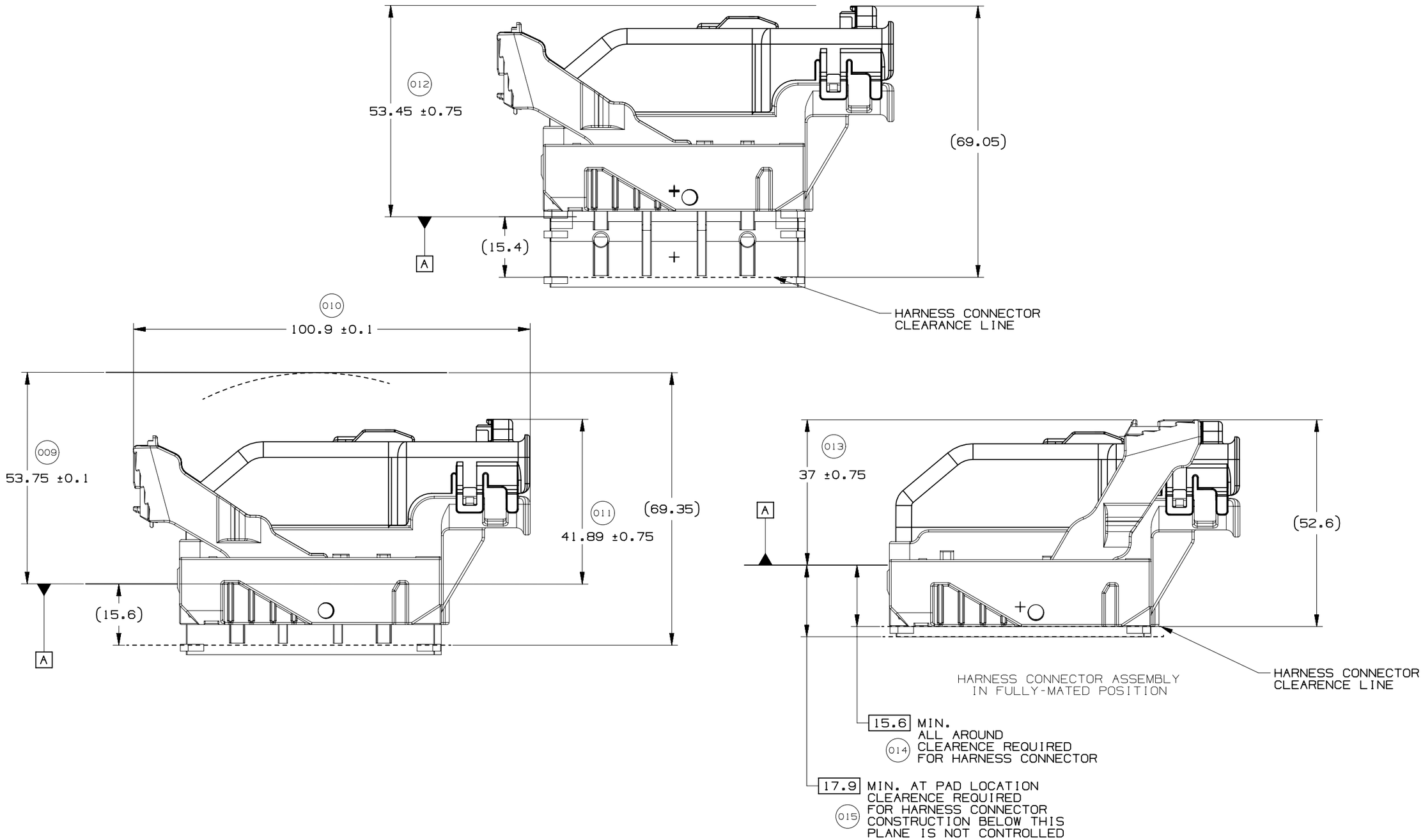

GM	PAGE TITLE LOCATION AND PACKAGING DIMENSIONS REFERENCING INTERFACE DATUM A		DRAWING NUMBER 12642695	DWG STATUS ST: R	REV: 002	PDI:	PAGE NUMBER 10 OF 21

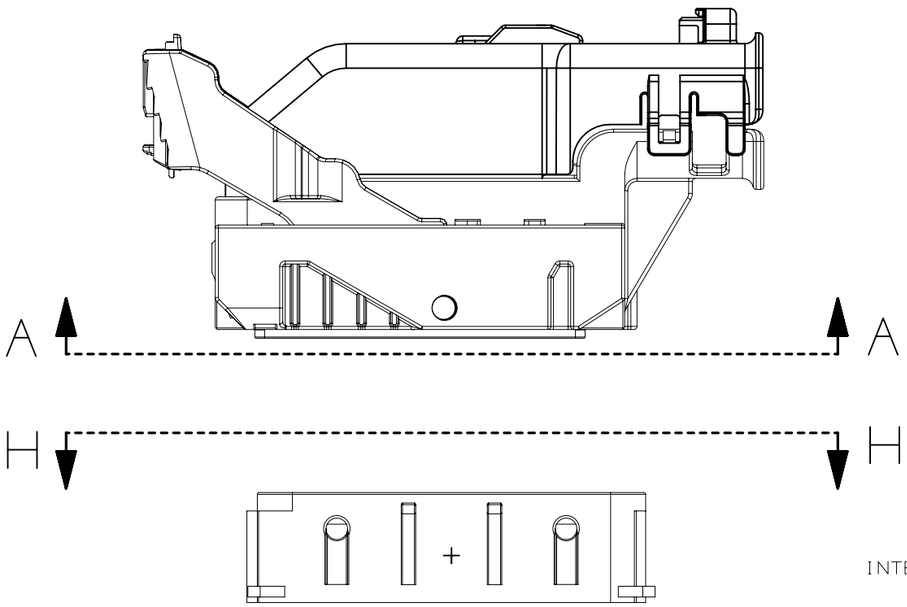

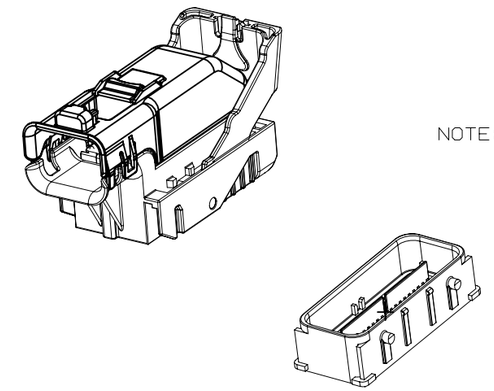

NOTE: REFERENCE THE COMPONENT TABLE
FOR KEY OPTIONS AND CONFIGURATIONS

INTERFACE SIDE SHOWN ON ALL SECTION VIEWS

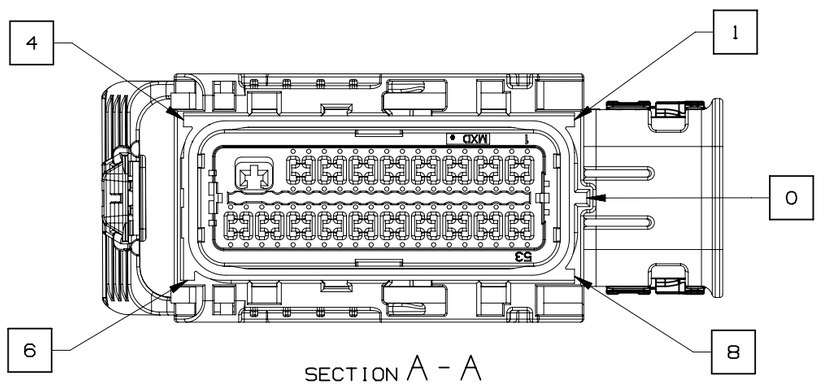

SECTION A - A
KEY OPTION B SHOWN

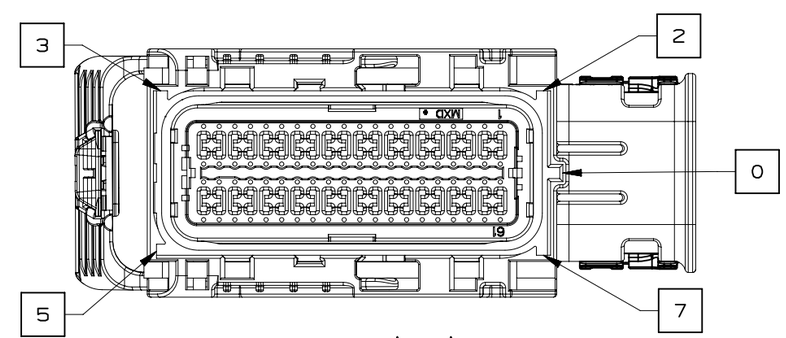

SECTION A - A
KEY OPTION K SHOWN

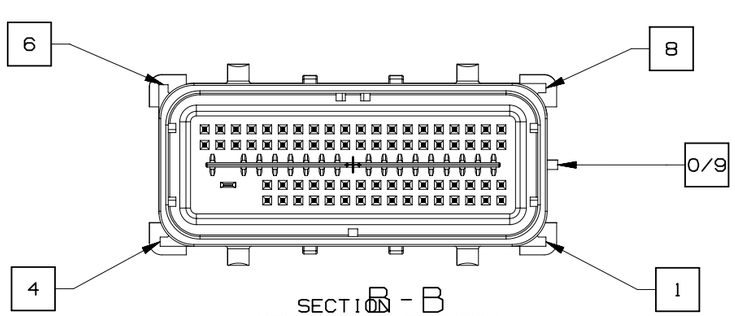

SECTION B - B
KEY OPTION B SHOWN

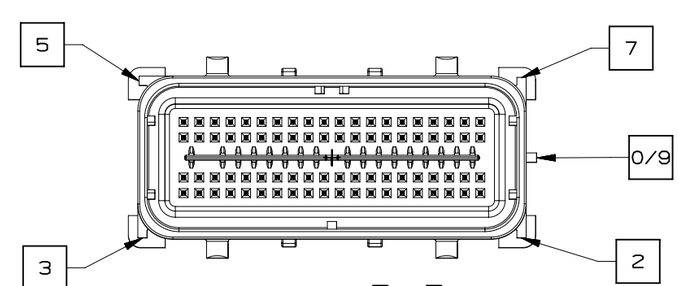

SECTION B - B
KEY OPTION K SHOWN

GM	PAGE TITLE KEY ID REF - WIRE DRESS OPTION 0		DRAWING NUMBER 12642695	DWG STATUS ST: R	REV: 002	PDI:
						PAGE NUMBER 11 OF 21

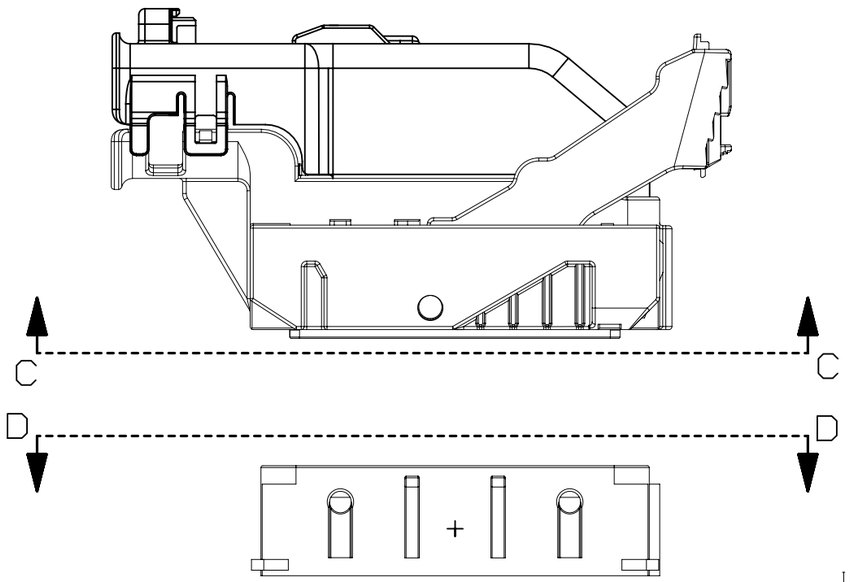

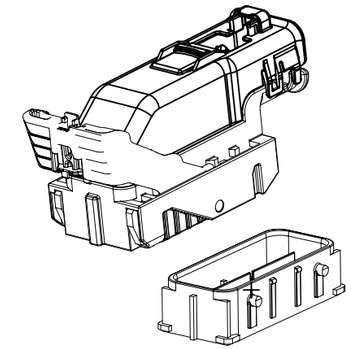

NOTE: REFERENCE THE COMPONENT TABLE
FOR KEY OPTIONS AND CONFIGURATIONS

VIEW V

INTERFACE SIDE SHOWN ON ALL SECTION VIEWS

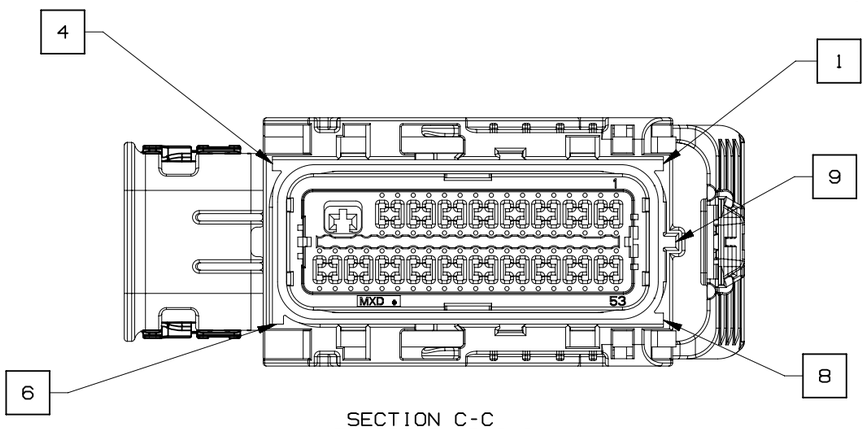

SECTION C-C
KEY OPTION B SHOWN

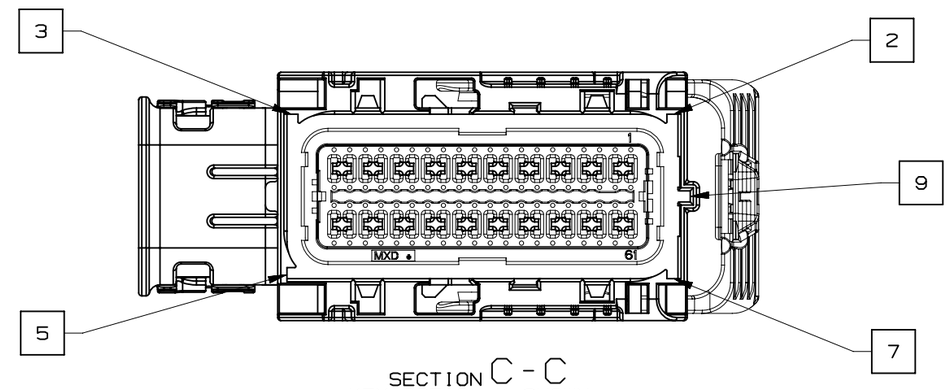

SECTION C - C
KEY OPTION K SHOWN

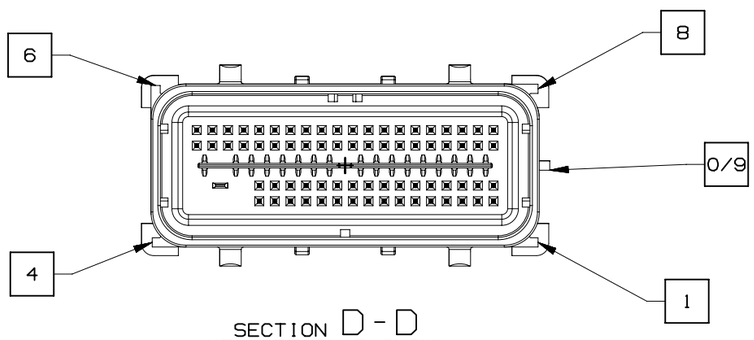

SECTION D - D
KEY OPTION B SHOWN

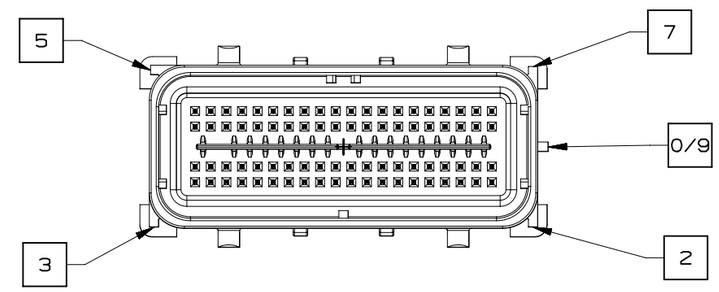

SECTION D - D
KEY OPTION K SHOWN

GM	PAGE TITLE KEY ID REF - WIRE DRESS OPTION 9		DRAWING NUMBER 12642695	DWG STATUS ST: R	REV: 002	PDI:	PAGE NUMBER 12 OF 21

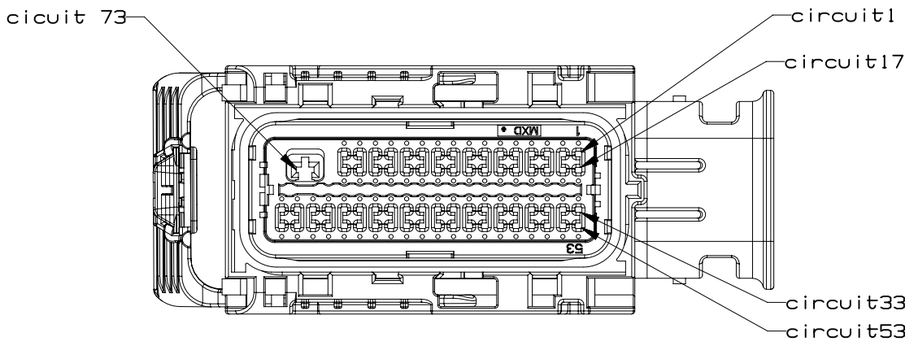

73 CKT HARNESS CONNECTOR ASSEMBLY
WIRE DRESS OPTION 0

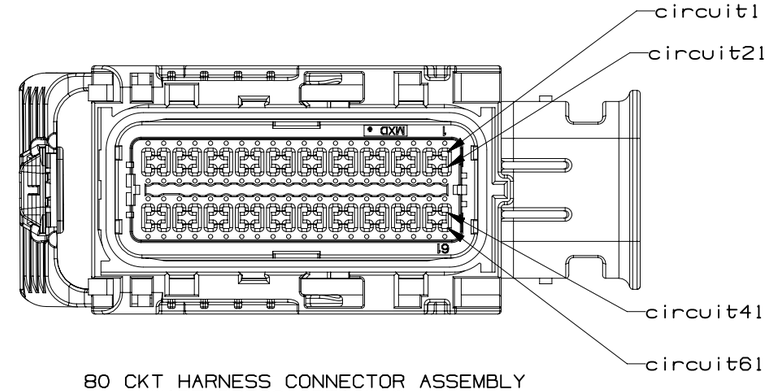

80 CKT HARNESS CONNECTOR ASSEMBLY
WIRE DRESS OPTION 0

INTERFACE SIDE SHOWN ON ALL VIEWS

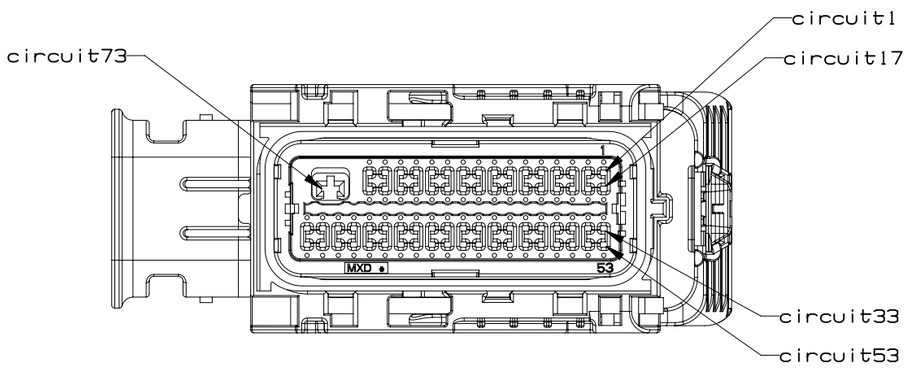

73 CKT HARNESS CONNECTOR ASSEMBLY
WIRE DRESS OPTION 9

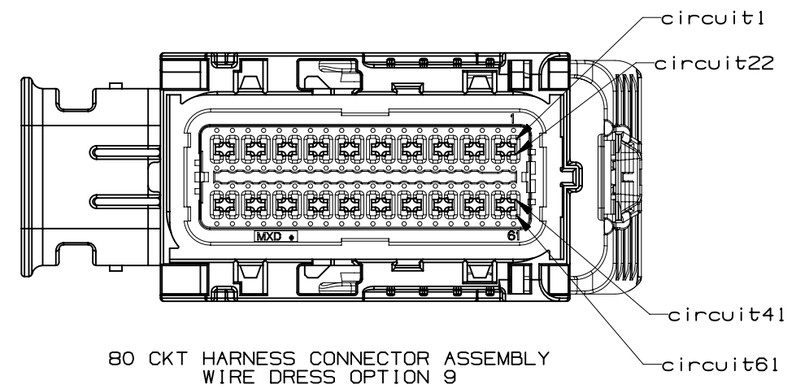

80 CKT HARNESS CONNECTOR ASSEMBLY
WIRE DRESS OPTION 9

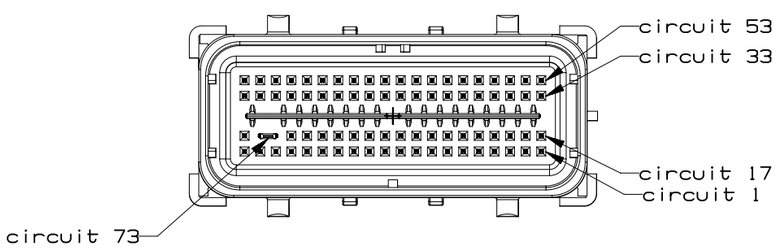

73 CKT COMPONENT CONNECTOR INTERFACE

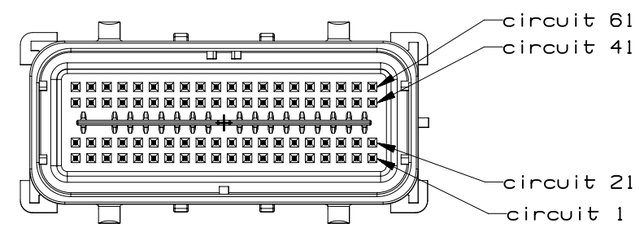

80 CKT COMPONENT CONNECTOR INTERFACE

	PAGE TITLE	DRAWING NUMBER	DWG STATUS			PAGE NUMBER
			ST	REV	PDI	
GM	CIRCUIT CONFIGURATIONS	12642695	R	002		13 OF 21

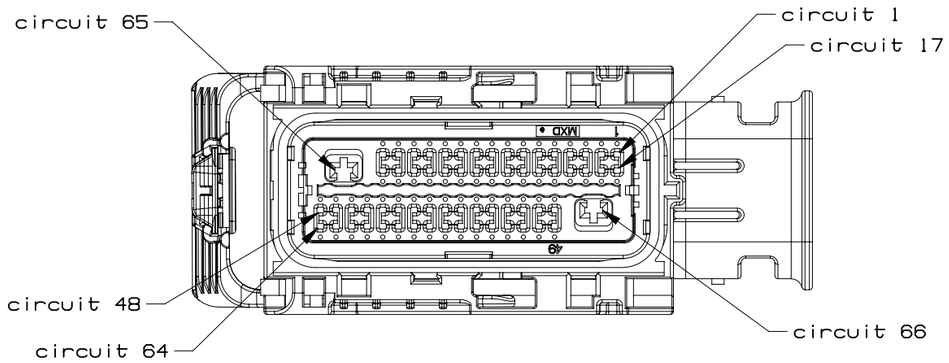

66 CKT HARNESS CONNECTOR ASSEMBLY
WIRE DRESS OPTION O

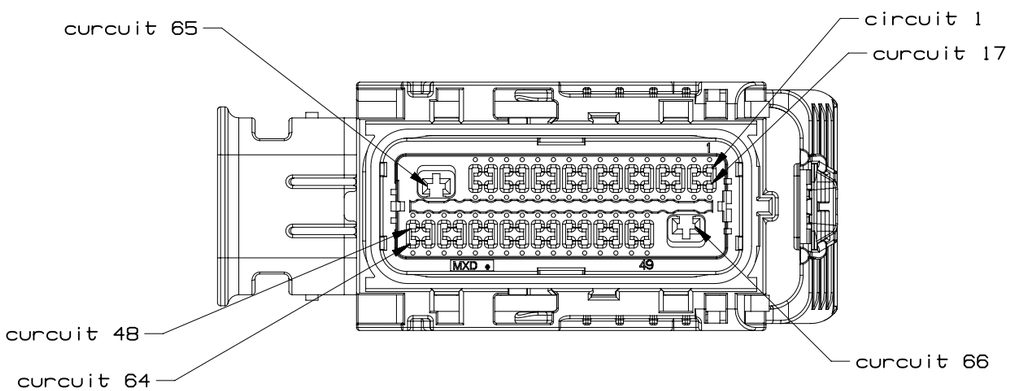

66 CKT HARNESS CONNECTOR ASSEMBLY
WIRE DRESS OPTION 9

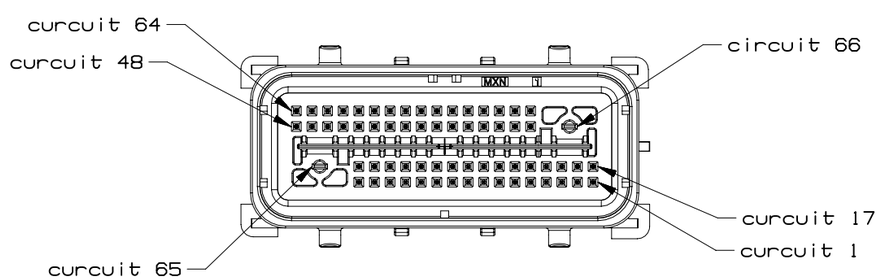

66 CKT COMPONENT CONNECTOR INTERFACE

GM	PAGE TITLE CIRCUIT CONFIGURATIONS		DRAWING NUMBER 12642695	DWG STATUS ST: R	REV: 002	PDI:	PAGE NUMBER 14 OF 21

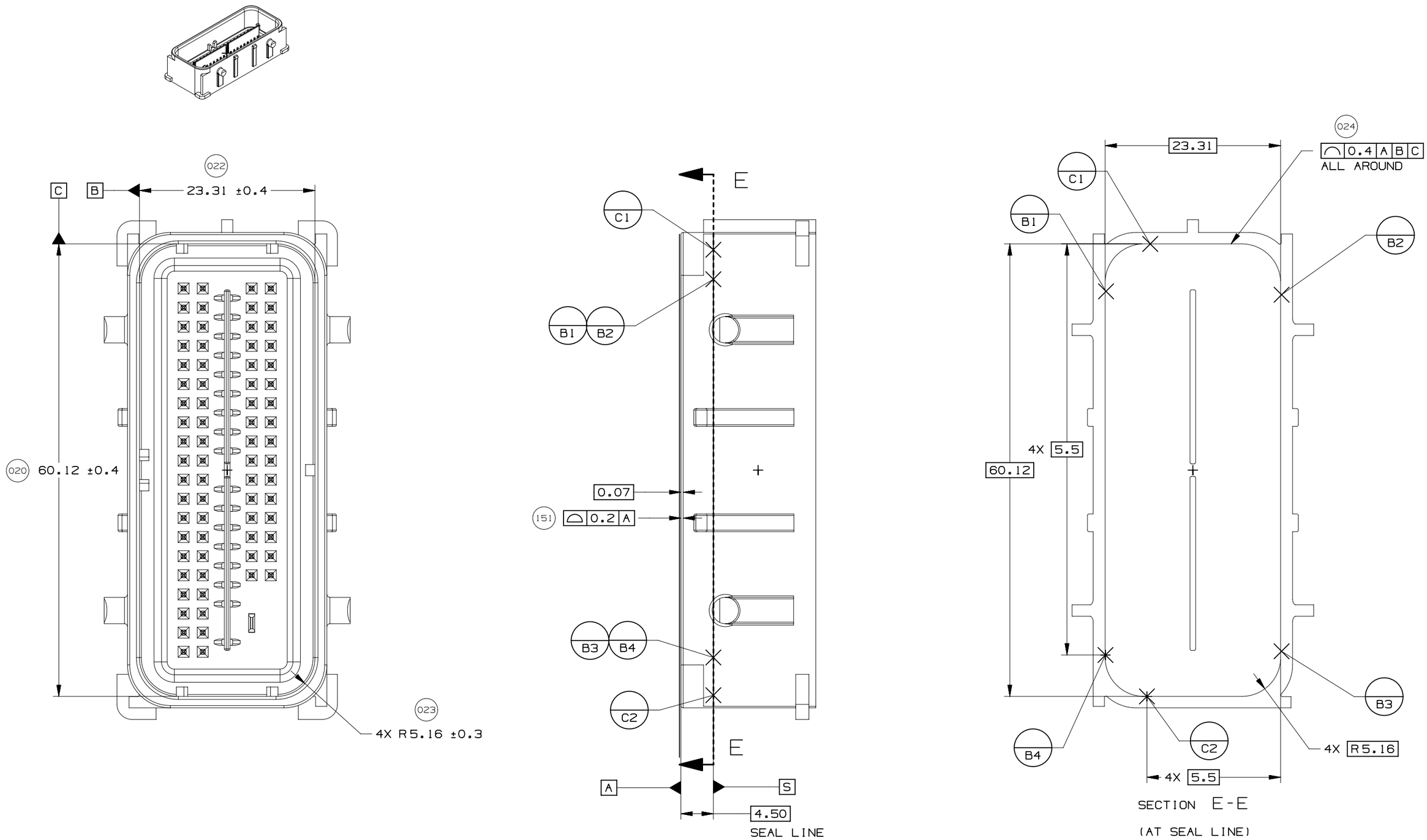

UNLESS SPECIFIED, TOLERANCE OF THE COMPONENT CONNECTOR INTERFACE TO BE 0.13 A B C

GM	PAGE TITLE COMPONENT CONNECTOR INTERFACE		DRAWING NUMBER 12642695	DWG STATUS ST: R REV: 002 PDI:	PAGE NUMBER 15 OF 21	

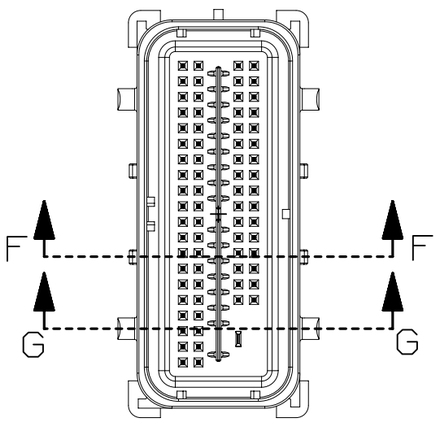

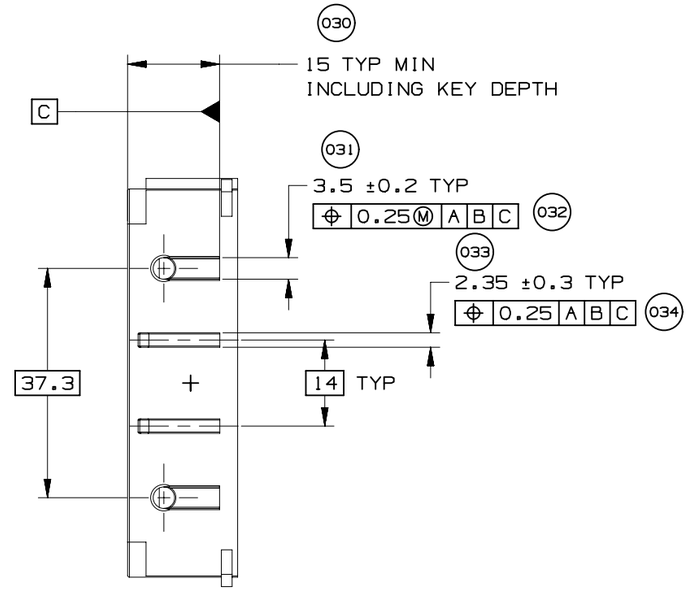

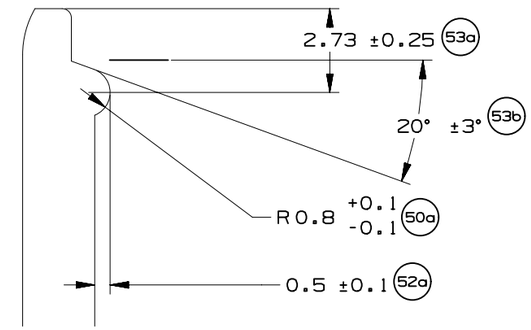

VIEW YY
SCALE 5:1

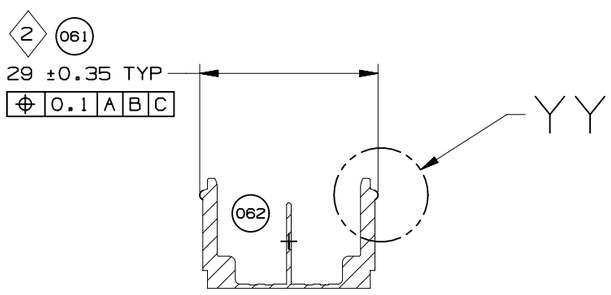

SECTION F-F

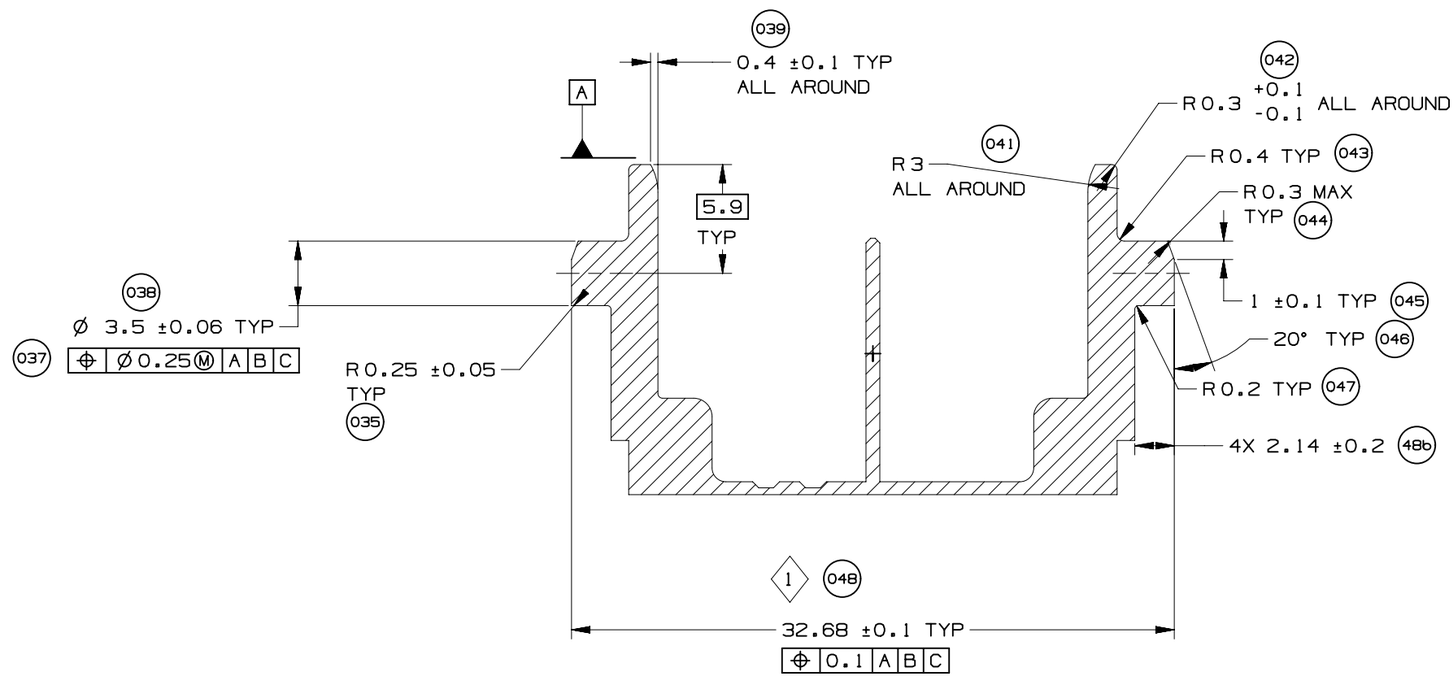

SECTION G-G
(CAM POST)

GM	PAGE TITLE COMPONENT CONNECTOR INTERFACE		DRAWING NUMBER 12642695	DWG STATUS ST: R	REV: 002	PDI:	PAGE NUMBER 16 OF 21

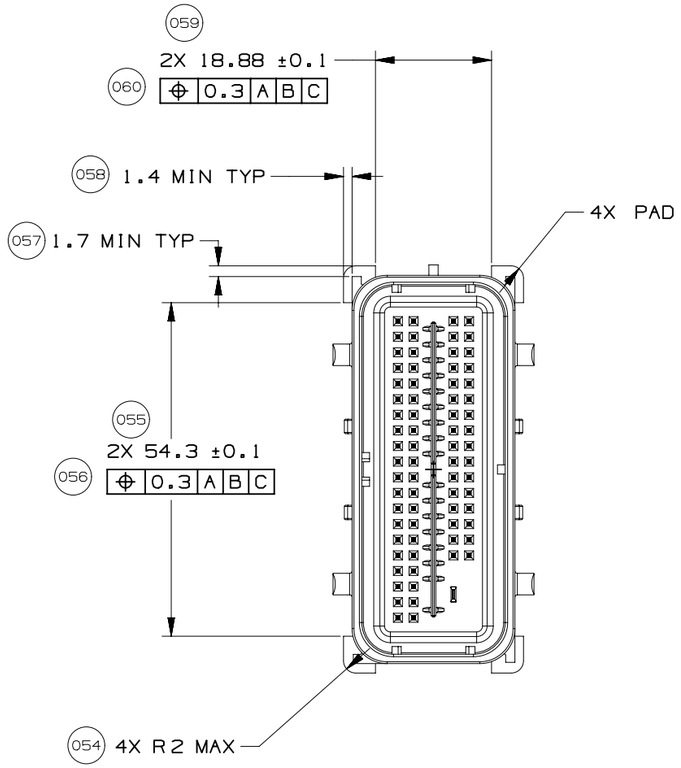

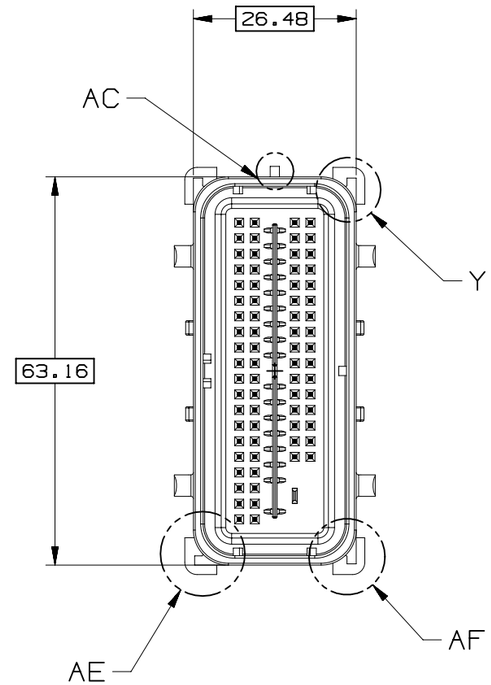

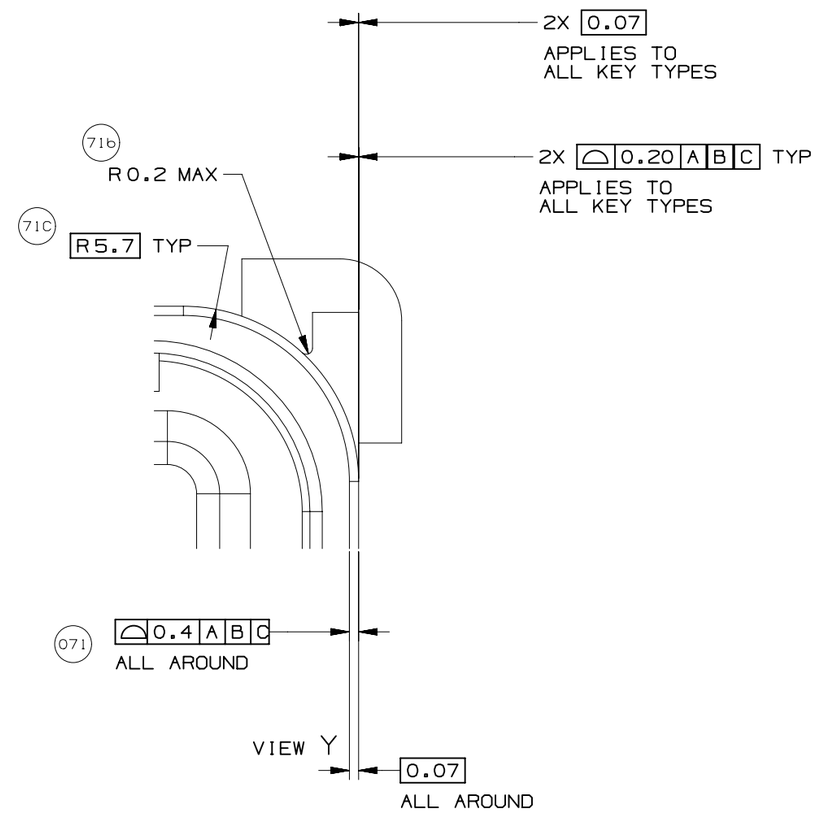

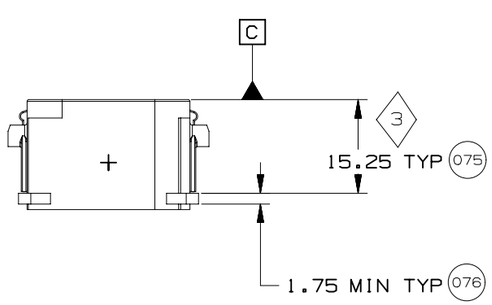

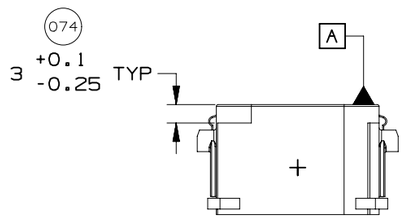

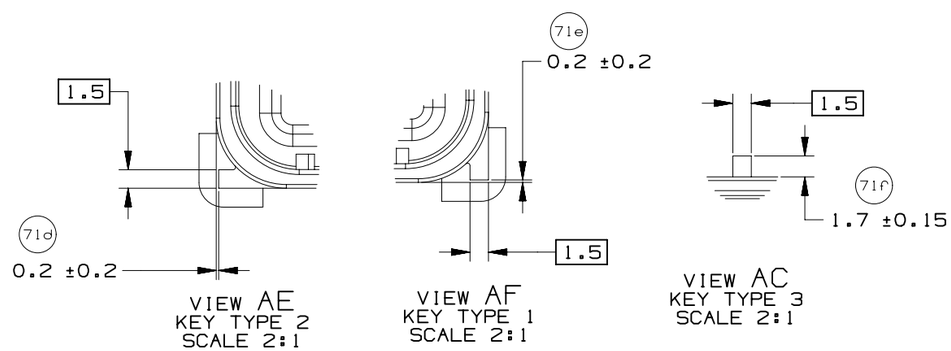

GM	PAGE TITLE COMPONENT CONNECTOR INTERFACE		DRAWING NUMBER 12642695	DWG STATUS ST: R REV: 002 PDI:	PAGE NUMBER 17 OF 21	

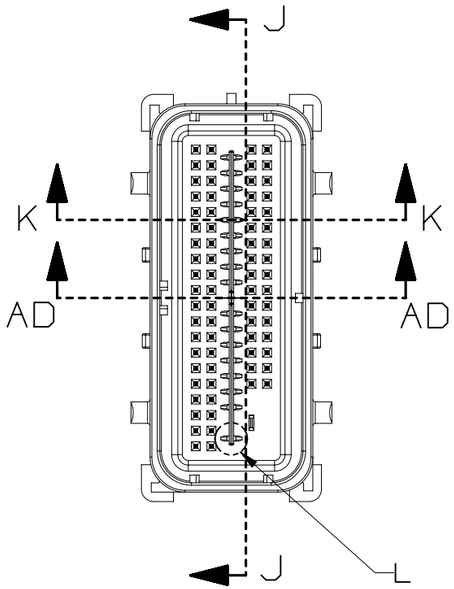

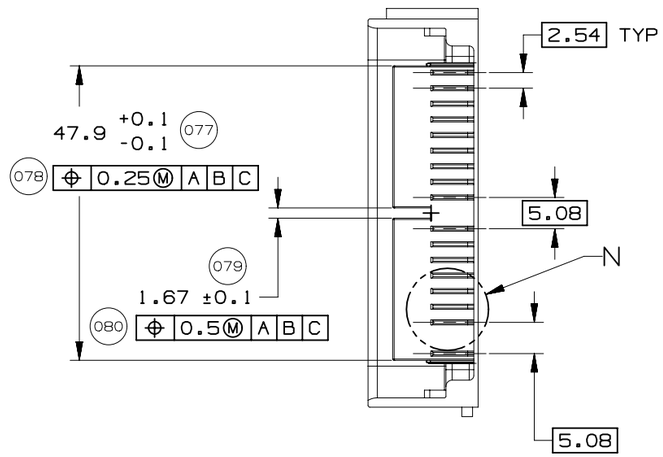

SECTION J-J

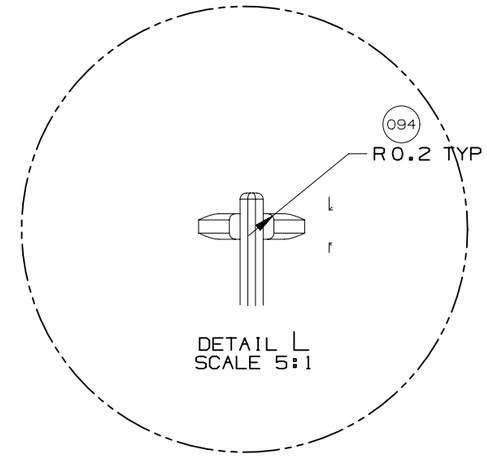

DETAIL L
SCALE 5:1

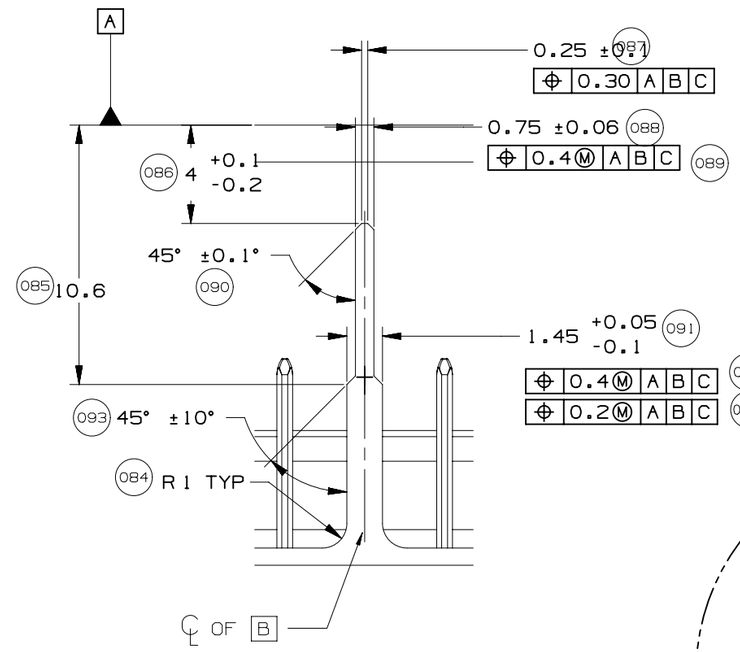

DETAIL M
TYPICAL
SCALE 4:1

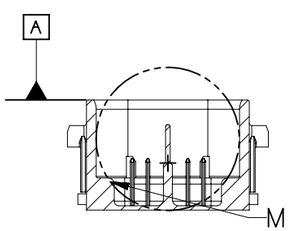

SECTION K-K

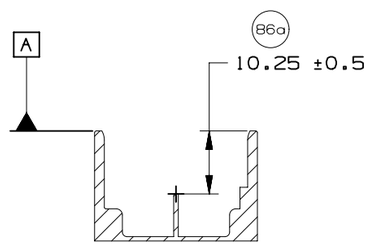

SECTION AD-AD

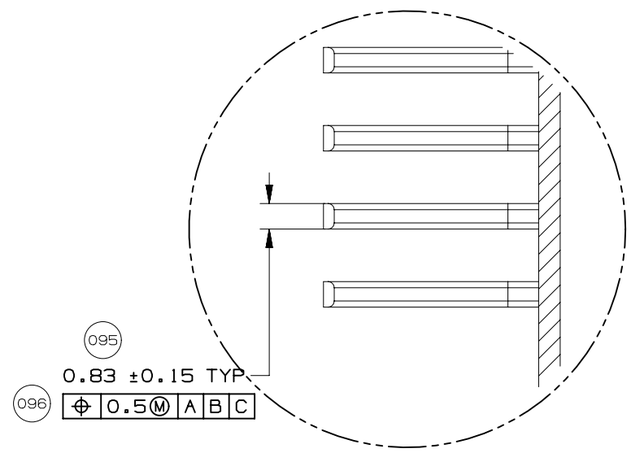

DETAIL N
SCALE 5:1

GM	PAGE TITLE COMPONENT CONNECTOR INTERFACE		DRAWING NUMBER 12642695	DWG STATUS ST: R REV: 002 PDI:	PAGE NUMBER 18 OF 21

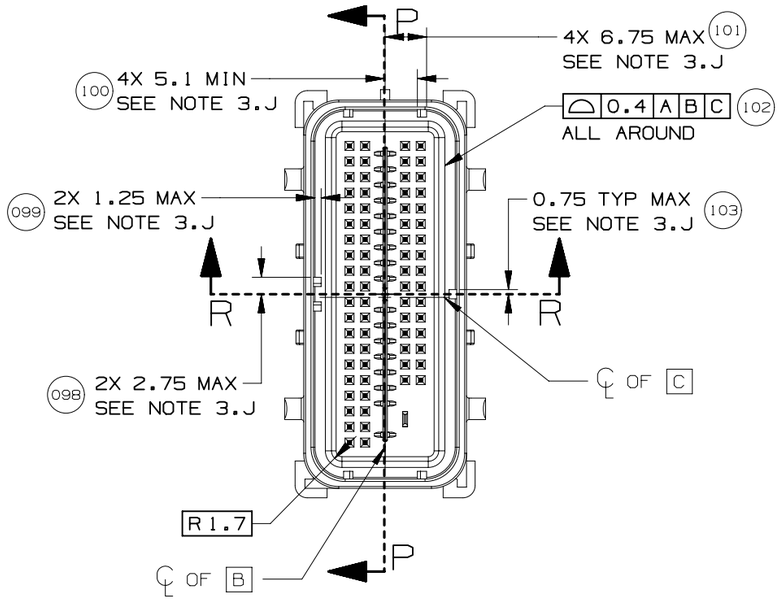

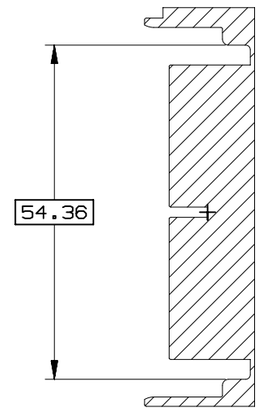

SECTION P-P

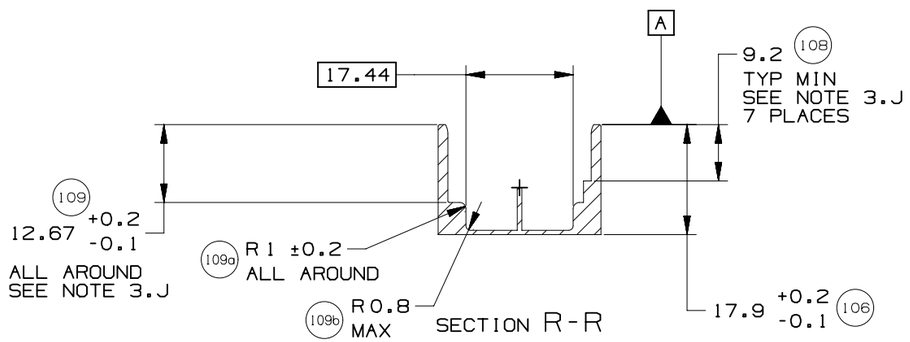

SECTION R-R

	GM	PAGE TITLE COMPONENT CONNECTOR INTERFACE		DRAWING NUMBER 12642695	DWG STATUS ST: R	REV: 002	PDI:	PAGE NUMBER 19 OF 21

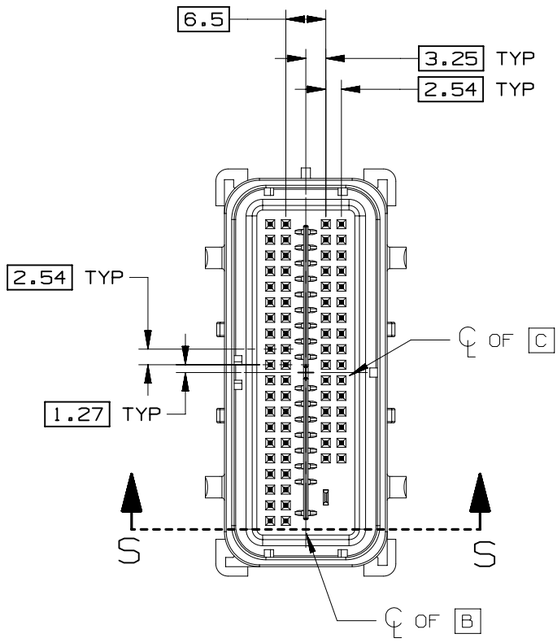

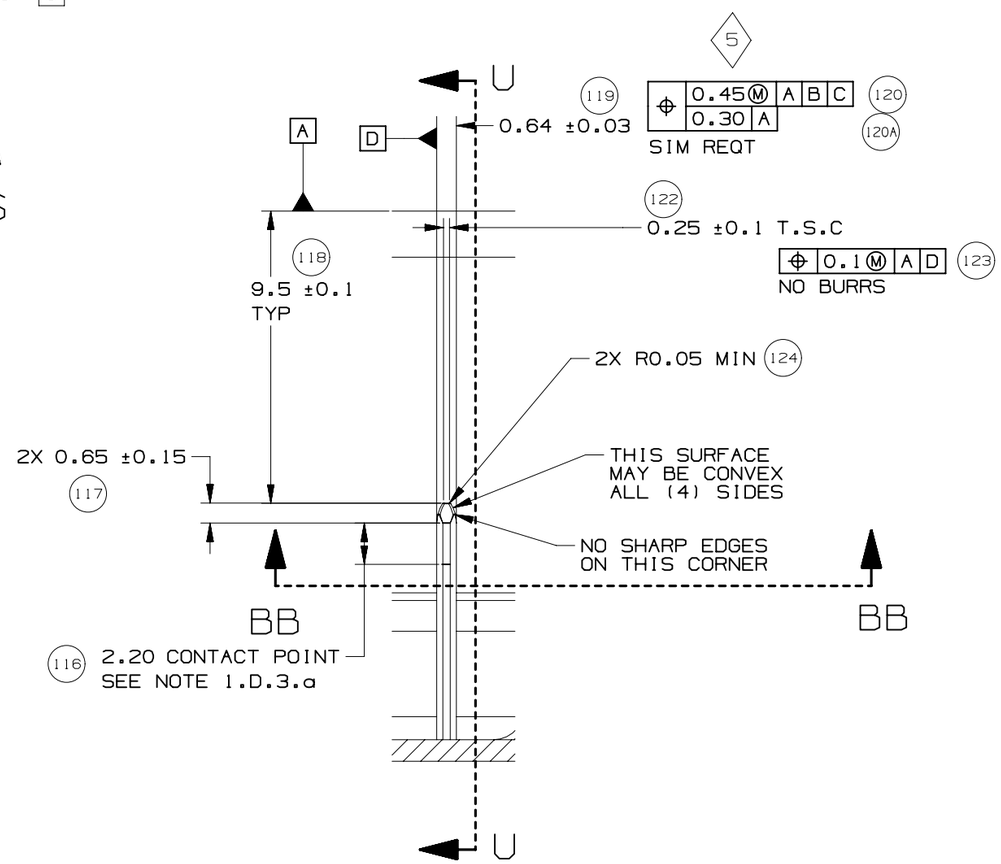

DETAIL T
TYPICAL
SCALE 5:1

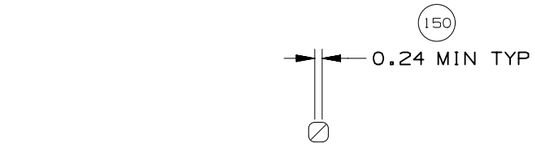

SECTION BB-BB

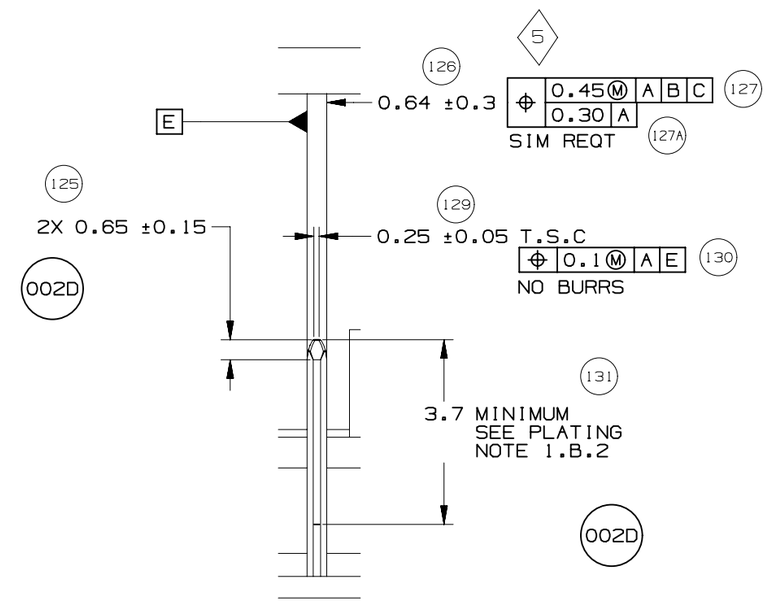

SECTION U-U

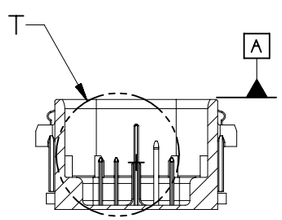

SECTION S-S

GM	PAGE TITLE COMPONENT CONNECTOR INTERFACE		DRAWING NUMBER 12642695	DWG STATUS ST: R REV: 002 PDI:	PAGE NUMBER 20 OF 21	

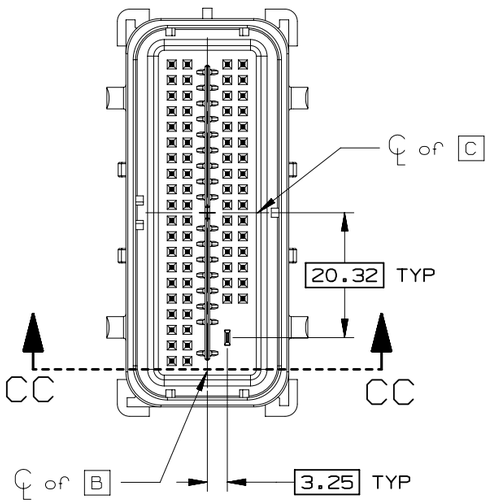

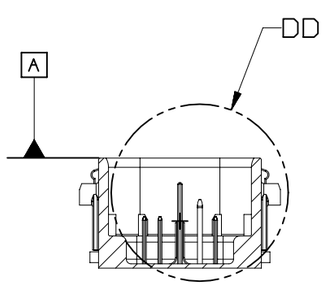

SECTION CC-CC

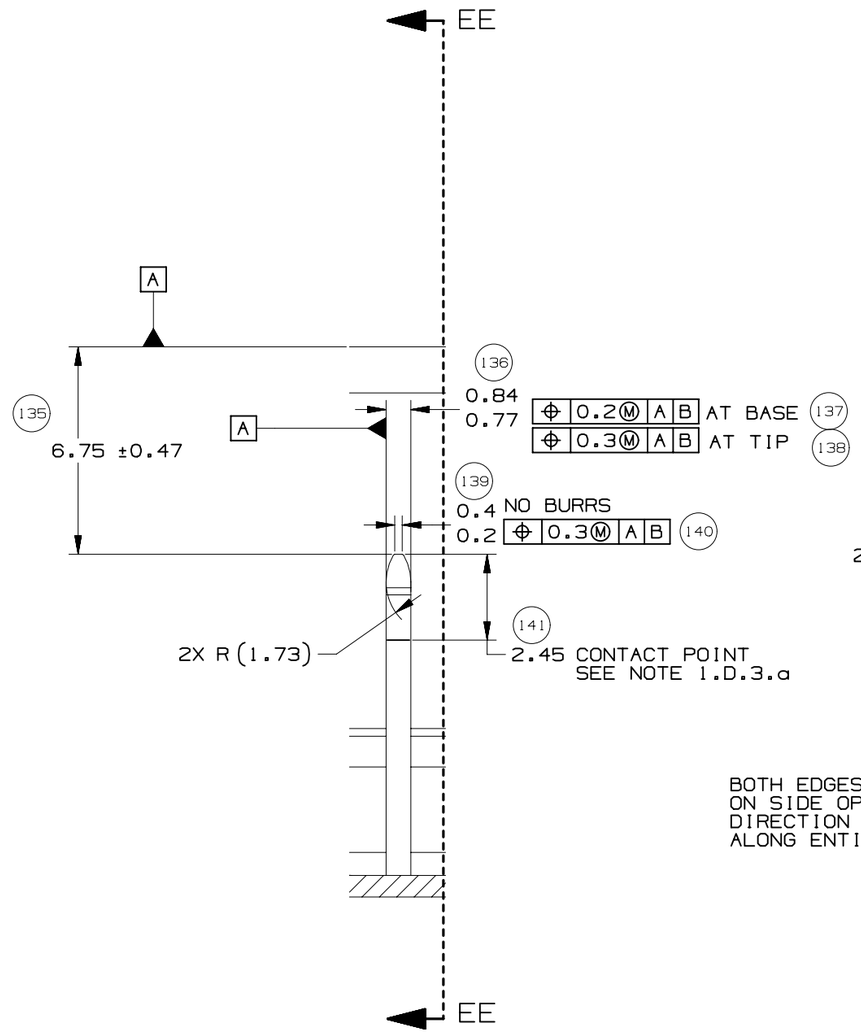

DETAIL DD
TYPICAL
SCALE 5:1

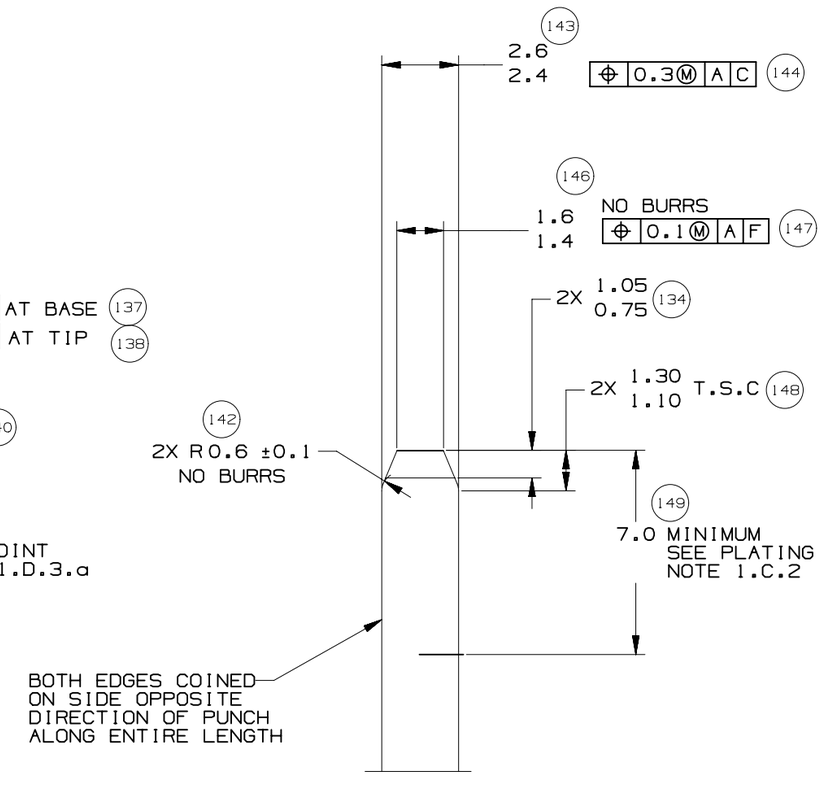

SECTION EE-EE
TYPICAL

GM	PAGE TITLE COMPONENT CONNECTOR INTERFACE		DRAWING NUMBER 12642695	DWG STATUS ST: R	REV: 002	PDI:	PAGE NUMBER 21 OF 21

INDEX

PAGE TITLE	PAGE
TITLE BLOCK	1
REVISION BLOCK	2
PART BLOCK	3
KPC BLOCK	4
COMPONENT TABLE	5
NOTES	6
NOTES	7
WIRE DRESS PACKAGING DIMENSIONS	8
LOCATION AND PACKAGING DIMENSIONS REFERENCING INTERFACE DATUMS B & C	9
LOCATION AND PACKAGING DIMENSIONS REFERENCING INTERFACE DATUM A	10
KEY ID REF - WIRE DRESS OPTION 0	11
KEY ID REF - WIRE DRESS OPTION 9	12
CIRCUIT CONFIGURATIONS	13
CIRCUIT CONFIGURATIONS	14
COMPONENT CONNECTOR INTERFACE	15
COMPONENT CONNECTOR INTERFACE	16
COMPONENT CONNECTOR INTERFACE	17
COMPONENT CONNECTOR INTERFACE	18
COMPONENT CONNECTOR INTERFACE	19
COMPONENT CONNECTOR INTERFACE	20
COMPONENT CONNECTOR INTERFACE	21

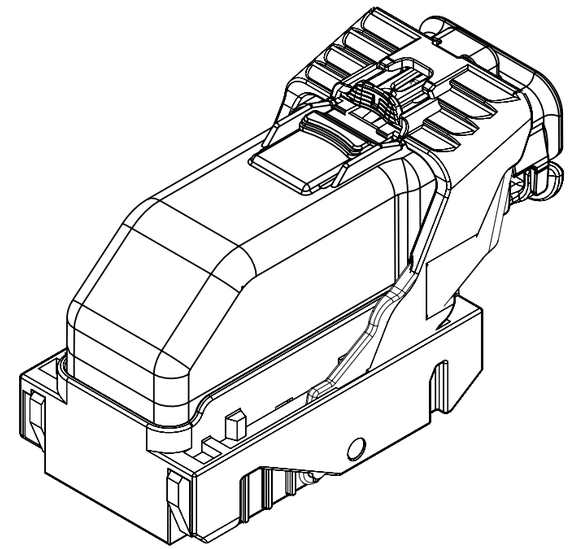

ISO VIEW

GM

UNLESS OTHERWISE SPECIFIED: THIS DOCUMENT IS IN ACCORDANCE WITH ASME Y14.5M-1994 AS AMMENDED BY THE GM GLOBAL DIMENSIONING AND TOLERANCING ADDENDUM-1997. ALL GEOMETRIC TOLERANCES AND RELATED DATUMS APPLY RFS. RULE #1 (PERFECT FORM AT MMC) DOES NOT APPLY WHEN A RELATIONSHIP BETWEEN FEATURES IS ESTABLISHED BY ORIENTATION OR LOCATION TOLERANCES. SEPARATE POSITION CALLOUTS MAY BE GAGED SEPARATELY REGARDLESS OF DATUM REFERENCES.

UG

CHANGE RESTRICTED
NO MANUAL CHANGES

DO NOT SCALE

METRIC

DIMENSIONS SHOWN IN MILLIMETERS UNLESS OTHERWISE SPECIFIED

REFERENCE
12H (MOLEX AUTOMOTIVE)

		DATE
DRAFTER	J SZYMKOWSKI	22DE05
APVD1	D PFAFFINGER	22DE05
APVD2	B BURT	22DE05
APVD3		
APVD4		
APVD5		

DRAWING NAME
HARNESS CONN ASM
66/73/80 CKTS

DRAWING NUMBER
12642695

DWG STATUS		
ST	REV	PDI
R	002	

PAGE NUMBER
1 OF 21

PAGE	DWG STATUS					REVISION HISTORY	AUTH	DR	CK	ENG
	DATE	ST	REV	CHG	PDI					
	19DE11	R	001			RELEASED TO PRODUCTION AT DLS A	CRMRJB	SC	MRO	GF
3	08MY15	R	002	A		REORDERED PART BLOCK AND ADDED MASS CORRECTED P/N TYPO FROM 12562676 TO 12582676				
3, 5		R	002	B		ADDED 12659312, 12659313, 12653574 AND 12653575				
6		R	002	C		REMOVED NOTE 1 . D . 3 . C				
20		R	002	D		DIM 125 WAS 3.25 DIM 131 WAS 5.5	CRMRJD	DFK	MRO	GF

PAGE	DWG STATUS					REVISION HISTORY	AUTH	DR	CK	ENG
	DATE	ST	REV	CHG	PDI					

GM	PAGE TITLE REVISION BLOCK	DRAWING NUMBER 12642695	DWG STATUS ST: R REV: 002 PDI:	PAGE NUMBER 2 OF 21

002A 002B

HIERARCHY /QUANTITY	DWG ITM	DWG RLTN SHIP	PART NUMBER	P-A ITM	DLS	ST	REV	PDI	NMCI	MASS (KG)	PART NAME	NOTES
	30	RD	12582676			C	003			0.011	WIRE HARNESS COVER	66/73/80 WAY
	29	RD	AMJ29214			C	003			0.050	HARN CONN ASM 80 CKT	KEY M OPTION 9
	28	RD	AMJ29136			C	003			0.050	HARN CONN ASM 80 CKT	KEY L OPTION 9
	27	RD	AMJ29117			C	003			0.050	HARN CONN ASM 80 CKT	KEY K OPTION 9
	26	RD	12615657			C	003			0.050	HARN CONN ASM 80 CKT	KEY J OPTION 9
	25	RD	12603599			C	003			0.050	HARN CONN ASM 80 CKT	KEY H OPTION 9
	24	RD	12603598			C	003			0.050	HARN CONN ASM 80 CKT	KEY G OPTION 9
	23	RD	AMJ28669			C	003			0.050	HARN CONN ASM 80 CKT	KEY M OPTION 0
	22	RD	AMJ29057			C	003			0.050	HARN CONN ASM 80 CKT	KEY L OPTION 0
	21	RD	AMJ28595			C	003			0.050	HARN CONN ASM 80 CKT	KEY K OPTION 0
	20	RD	12615656			C	003			0.050	HARN CONN ASM 80 CKT	KEY J OPTION 0
	19	RD	12588058			C	004			0.050	HARN CONN ASM 80 CKT	KEY H OPTION 0
	18	RD	12588057			C	003			0.050	HARN CONN ASM 80 CKT	KEY G OPTION 0
	17	RD	12653575			C	002			0.050	HARN CONN ASM 73 CKT	KEY F OPTION 9
	16	RD	AMJ28698			C	003			0.050	HARN CONN ASM 73 CKT	KEY E OPTION 9
	15	RD	12647269			C	002			0.050	HARN CONN ASM 73 CKT	KEY D OPTION 9
	14	RD	12615655			C	003			0.050	HARN CONN ASM 73 CKT	KEY C OPTION 9
	13	RD	12603597			C	005			0.050	HARN CONN ASM 73 CKT	KEY B OPTION 9
	12	RD	12603596			C	006			0.050	HARN CONN ASM 73 CKT	KEY A OPTION 9
	11	RD	12653574			C	002			0.050	HARN CONN ASM 73 CKT	KEY F OPTION 0
	10	RD	AMJ28633			C	003			0.050	HARN CONN ASM 73 CKT	KEY E OPTION 0
	09	RD	12647268			C	002			0.050	HARN CONN ASM 73 CKT	KEY D OPTION 0
	08	RD	12615654			C	005			0.050	HARN CONN ASM 73 CKT	KEY C OPTION 0
	07	RD	12582678			C	008			0.050	HARN CONN ASM 73 CKT	KEY B OPTION 0
	06	RD	12582677			C	010			0.050	HARN CONN ASM 73 CKT	KEY A OPTION 0
	05	RD	12659313			2	001			0.050	HARN CONN ASM 66 CKT	KEY C OPTION 9
	04	RD	12642693			C	002			0.050	HARN CONN ASM 66 CKT	KEY A OPTION 9
	03	RD	12659312			2	001			0.050	HARN CONN ASM 66 CKT	KEY C OPTION 0
	02	RD	12642692			C	003			0.050	HARN CONN ASM 66 CKT	KEY A OPTION 0
	01	RD	12642695		A		002			3.408	HARNESS CONN ASM	
											DRAWING	

PARTS SHOWN ON DRAWING

GM

PAGE TITLE
PART BLOCK

DRAWING NUMBER
12642695

DWG STATUS		
ST	REV	PDI
R	002	

PAGE NUMBER
3 OF 21

KEY PRODUCT CHARACTERISTICS
(IN ACCORDANCE WITH QN 1805 OR QN 1050)

▽ SAFETY/COMPLIANCE	TOTAL ON DRAWING	5
◇ FIT/FUNCTION	LAST NO. USED	5

NO	TYPE	DESCRIPTION	RATIONALE	PAGE/ZONE
1	F/F	32.68	IMPROVE CONNECTOR SYSTEM MATING	15
2	F/F	29.00	INSURE PROPER RELEASE OF LEVER	15
3	F/F	15.25	INSURE FINAL MATE POSITION	16
5	F/F	POSITIONAL TOLERANCE (2 PLACES)	INSURE CONNECTOR SYSTEM MATEABILITY	19

					APPLICABLE COMPONENTS					
LINE	MFG.	MFG. P/N	GM P/N	EFFECTIVE DATE	DESCRIPTION	KEY OPTION	WIRE DRESS OPTION	KEY CONFIG.	COLOR	STATUS
-										
1	MOLEX	34565-0003	12582676	02JN03	MX123 DRESS COVER 66/73/80 CKT	N/A	N/A	N/A	BLACK	AVAILABLE
2	MOLEX	34822-0013	12642692	01SP13	MX123 HRNS CONN ASSY 66 CKT	A	0	1458	BLACK	AVAILABLE
3	MOLEX	34822-0033	12659312	01SP13	MX123 HRNS CONN ASSY 66 CKT	C	0	2467	BLUE	AVAILABLE
4	MOLEX	34822-0023	12642693	01SP13	MX123 HRNS CONN ASSY 66 CKT	A	9	1458	BLACK	AVAILABLE
5	MOLEX	34822-0043	12659313	01SP13	MX123 HRNS CONN ASSY 66 CKT	C	9	2467	BLUE	AVAILABLE
6	MOLEX	34566-0103	12582677	11JN04	MX123 HRNS CONN ASSY 73 CKT	A	0	1458	BLACK	AVAILABLE
7	MOLEX	34566-0203	12582678	11JN04	MX123 HRNS CONN ASSY 73 CKT	B	0	1468	ST GRAY	AVAILABLE
8	MOLEX	34566-0303	12615654	09AP08	MX123 HRNS CONN ASSY 73 CKT	C	0	2467	BLUE	AVAILABLE
9	MOLEX	34566-0403	12647268	T.B.D	MX123 HRNS CONN ASSY 73 CKT	D	0	2367	BROWN	NOT ACTIVE
10	MOLEX	34566-0503	AMJ28633	T.B.D	MX123 HRNS CONN ASSY 73 CKT	E	0	2468	GREEN	NOT ACTIVE
11	MOLEX	34566-0603	12653574	05DC14	MX123 HRNS CONN ASSY 73 CKT	F	0	1357	NATURAL	AVAILABLE
12	MOLEX	34566-0703	12588057	09AP08	MX123 HRNS CONN ASSY 80 CKT	G	0	1358	BLUE	AVAILABLE
13	MOLEX	34566-0803	12588058	11JN04	MX123 HRNS CONN ASSY 80 CKT	H	0	2458	ST GRAY	AVAILABLE
14	MOLEX	34566-0903	12615656	T.B.D	MX123 HRNS CONN ASSY 80 CKT	J	0	2457	BLACK	NOT ACTIVE
15	MOLEX	34566-1003	AMJ28595	T.B.D	MX123 HRNS CONN ASSY 80 CKT	K	0	2357	BROWN	NOT ACTIVE
16	MOLEX	34566-1103	AMJ29057	T.B.D	MX123 HRNS CONN ASSY 80 CKT	L	0	2368	GREEN	NOT ACTIVE
17	MOLEX	34566-1203	AMJ28669	T.B.D	MX123 HRNS CONN ASSY 80 CKT	M	0	2358	NATURAL	NOT ACTIVE
18	MOLEX	34566-1303	12603596	11JN04	MX123 HRNS CONN ASSY 73 CKT	A	9	1458	BLACK	AVAILABLE
19	MOLEX	34566-1403	12603597	11JN04	MX123 HRNS CONN ASSY 73 CKT	B	9	1468	ST GRAY	AVAILABLE
20	MOLEX	34566-1503	12615655	09AP08	MX123 HRNS CONN ASSY 73 CKT	C	9	2467	BLUE	AVAILABLE
21	MOLEX	34566-1603	12647269	T.B.D	MX123 HRNS CONN ASSY 73 CKT	D	9	2367	BROWN	NOT ACTIVE
22	MOLEX	34566-1703	AMJ28698	T.B.D	MX123 HRNS CONN ASSY 73 CKT	E	9	2468	GREEN	NOT ACTIVE
23	MOLEX	34566-1803	12653575	05DC14	MX123 HRNS CONN ASSY 73 CKT	F	9	1357	NATURAL	AVAILABLE
24	MOLEX	34566-1903	12603598	09AP08	MX123 HRNS CONN ASSY 80 CKT	G	9	1358	BLUE	AVAILABLE
25	MOLEX	34566-2003	12603599	11JN04	MX123 HRNS CONN ASSY 80 CKT	H	9	2458	ST GRAY	AVAILABLE
26	MOLEX	34566-2103	12615657	T.B.D	MX123 HRNS CONN ASSY 80 CKT	J	9	2457	BLACK	NOT ACTIVE
27	MOLEX	34566-2203	AMJ29117	T.B.D	MX123 HRNS CONN ASSY 80 CKT	K	9	2357	BROWN	NOT ACTIVE
28	MOLEX	34566-2303	AMJ29136	T.B.D	MX123 HRNS CONN ASSY 80 CKT	L	9	2368	GREEN	NOT ACTIVE
29	MOLEX	34566-2403	AMJ29214	T.B.D	MX123 HRNS CONN ASSY 80 CKT	M	9	2358	NATURAL	NOT ACTIVE
30	MOLEX	34736-2002	12642697	01AU10	MX64 RCPT TERM Ag 18/20 GAGE B (RIGHT PAYOFF)	N/A	N/A	N/A	N/A	AVAILABLE
31	MOLEX	34736-2001	12642696	01AU10	MX64 RCPT TERM Ag 22 GAGE B (RIGHT PAYOFF)	N/A	N/A	N/A	N/A	AVAILABLE
32	MOLEX	34586-0001	T.B.D.	11JN04	MX123 0.64MM GROMMET PLUG	N/A	N/A	N/A	NATURAL	AVAILABLE
33	YAZAKI	7116-4150-02	12588066	02JN03	2.8mm YESC SEALED FEMALE TERMINAL TIN 20/22 GAGE (CABLE RANGE 0.30mm-0.60mm)	N/A	N/A	N/A	N/A	NOT ACTIVE
34	YAZAKI	7116-4151-02	12588067	02JN03	2.8mm YESC SEALED FEMALE TERMINAL TIN 16/18 GAGE (CABLE RANGE 0.75mm-1.40mm)	N/A	N/A	N/A	N/A	NOT ACTIVE
35	YAZAKI	7116-4152-02	12582685	02JN03	2.8mm YESC SEALED FEMALE TERMINAL TIN 14 GAGE (CABLE RANGE 1.50mm-2.50mm)	N/A	N/A	N/A	N/A	AVAILABLE
36	YAZAKI	7158-3111-60	12588068	02JN03	2.8mm CABLE SEAL (wire O.D. range 1.20mm-1.90mm)	N/A	N/A	N/A	GREEN	NOT ACTIVE
37	YAZAKI	7158-3112-70	12588069	02JN03	2.8mm CABLE SEAL (wire O.D. range 1.80mm-2.30mm)	N/A	N/A	N/A	YELLOW	NOT ACTIVE
38	YAZAKI	7158-3113-40	12582686	02JN03	2.8mm CABLE SEAL (wire O.D. range 2.18mm-3.00mm)	N/A	N/A	N/A	WHITE	AVAILABLE
39	YAZAKI	7158-3114-90	T.B.D	02JN03	2.8mm YESC CAVITY PLUG	N/A	N/A	N/A	BLUE	AVAILABLE
40	MOLEX	63811-4200	XX019825	02JN03	MX64 TERM HAND CRIMP TOOL	N/A	N/A	N/A	N/A	AVAILABLE
41	MOLEX	63813-1400	XX019826	02JN03	MX64 TERM SERVICE TOOL	N/A	N/A	N/A	N/A	AVAILABLE
42	MOLEX	63865-8000	XX019827	02JN03	MX64 CRIMP APPLICATOR with TOOL KIT 18/20 GAGE PAYOFF DIRECTION D (left payoff) (contact Molex for payoff detail)	N/A	N/A	N/A	N/A	AVAILABLE
43	MOLEX	63865-8070	XX019828	02JN03	MX64 APPLICATOR TOOL KIT 18/20 GAGE	N/A	N/A	N/A	N/A	AVAILABLE
44	MOLEX	63865-8100	XX019829	02JN03	MX64 CRIMP APPLICATOR with TOOL KIT 22 GAGE PAYOFF DIRECTION D (left payoff) (contact Molex for payoff detail)	N/A	N/A	N/A	N/A	AVAILABLE
45	MOLEX	63865-8170	XX019830	02JN03	MX64 APPLICATOR TOOL KIT 22 GAGE	N/A	N/A	N/A	N/A	AVAILABLE
46	SPX	J35616-64	T.B.D.	02JN03	0.64mm PROBE TOOL (for rcpt)	N/A	N/A	N/A	N/A	AVAILABLE
47	SPX	J35616-64A	T.B.D.	02JN03	0.64mm PROBE TOOL WITH EXT (for rcpt)	N/A	N/A	N/A	N/A	AVAILABLE
48	SPX	J35616-65	T.B.D.	02JN03	0.64mm PROBE TOOL WITH EXT (for pin)	N/A	N/A	N/A	N/A	AVAILABLE
49	SPX	J35616-4A	T.B.D.	02JN03	2.8mm PROBE TOOL (for rcpt)	N/A	N/A	N/A	N/A	AVAILABLE
50	YAZAKI	X39899-J374	12094430	02JN03	2.8mm TERM SERVICE TOOL	N/A	N/A	N/A	N/A	AVAILABLE

002B

* - MX123 DRESS COVER 73/80/66 CKT MATES TO ANY MX123 HARN CONN ASSY SHOWN ON TABLE ABOVE

NOTES: UNLESS OTHERWISE SPECIFIED

1. MATERIAL FOR INTERFACE:

A. RESIN:
   1. 30% G.F. PBT; 20% MAX. (BY WEIGHT) REGRIND.
   2. MATING CONNECTOR INTERFACE PART COLOR MUST BE SAME AS MATCHING KEYED HARNESS CONNECTOR ASSEMBLY.
   3. MUST BE VALIDATED FOR INDIVIDUAL DEVICE APPLICATION REQUIREMENTS.

B. 0.64MM PINS:
   1. BASE MATERIAL: COPPER ALLOY; CONDUCTIVITY >= 28% IACS AT 20°C; TENSILE STRENGTH >= 635 N/mm²;SURFACE ROUGHNESS R_a 6 MAX.
   2. PLATING FINISH: SILVER (Ag). PLATING TO BE 1.9-3.3 um ELECTRODEPOSITED SEMI-BRIGHT SILVER OVER 1.25-2.25 um DUCTILE SULPHAMATE NICKEL PER NOTE 1(D).
   3. ANTI-TARNISH: SYNTHETIC HYDROCARBON CONTACT SURFACE FINISH OR EQUIVALENT APPLIED WITHOUT VOID TO CONTACT AREA (MIN 3.7mm FROM PIN TIP).

C. 2.8MM BLADE:
   1. BASE MATERIAL: COPPER ALLOY; CONDUCTIVITY>= 28% IACS AT 20°C; TENSILE STRENGTH >= 350 N/mm²; SURFACE ROUGHNESS R_a 6 MAX.
   2. PLATING FINISH: TIN. PLATING TO BE 2.5-5.0 um ELECTRODEPOSITED TIN, MATTE FINISH OVER 1.25-2.5um DUCTILE SULPHAMATE NICKEL PER NOTE 1(D).

D. PLATING REQUIREMENTS:

   1. SILVER PLATING
      a. 99.5% PURE SEMI-BRIGHT WITH NO ORGANIC BRIGHTNERS OR CHROMATES.

   2. NICKEL PLATING
      a. ELECTRODEPOSITED DUCTILE SULFAMATE NICKEL WITH A NON-BRIGHTENED FINISH. NO ORGANIC OR BRIGHTENING AGENTS SHALL BE ALLOWED.
      b. SHALL ONLY BE USED AS AN UNDERLYING PLATING AND MAY NOT BE USED AS AN ELECTRICAL CONTACT SURFACE PLATING.
      c. SHALL BE NODULE FREE WHEN VIEWED AT 10X MAGNIFICATION IN MEASURED IN CONTACT SURFACE AREA PLUS 0.5MM PERIMETER AROUND THE CONTACT SURFACE AREA.
      d. ALL PLATINGS SHALL HAVE A 1.0% MAXIMUM BY WEIGHT IMPURITIES. IMPURITIES ARE DEFINED AS ALL ELEMENTS NOT THE PRIMARY PLATING OR HARDENING AGENT IF APPLICABLE, AS DETERMINED BY WET CHEMICAL ANALYSIS OR AUGER METHOD. NO SINGLE IMPURITY SHALL EXCEED 0.1% MAXIMUM BY WEIGHT.

   3. TESTING
      a. THICKNESS TO BE MEASURED IN CONTACT SURFACE AREA PLUS 0.5MM PERIMETER AROUND THE CONTACT SURFACE AREA AS DESIGNATED IN THE DRAWING. THICKNESS SHALL BE DETERMINED BY METHOD OF X-RAY (XRF).
      b. PLATING ADHESION SHALL BE TESTED BY A BEND TEST FOR ALL METALS. THE TEST SAMPLE SHALL BE BENT 90 DEGREES TO DETERMINE DEPOSIT ADHESION. TESTING SHALL BE COMPLETED IN ACCORDANCE WITH ASTM SPEC B571.

002C

2. DESIGN - GENERAL:

A. THIS IS A 100% CAD GENERATED PART. THE CAD MATHEMATICAL DATA IS THE MASTER FOR THIS PART. FOR DIMENSIONAL OR ANY INFORMATION NOT SHOWN ON THIS DRAWING, ANALYZE THE CAD MODEL.
B. TOLERANCES:
   1. LINEAR 0.X ± 0.30
              0.XX ± 0.10
              0.XXX ± 0.10
   2. ANGULAR X° ± 3°
   3. | ⌓ | 1.0 | A | B | C |
C. MINIMUM WALL THICKNESS REQUIRED: 1.3mm.
D. CORNERS SHOWN AS SHARP TO BE R 0.2 MAX.
E. LETTERING SHALL BE 0.15 MAX RAISED IN 0.20 MAX RECESS PAD. THIS INCLUDES MATERIAL CODE, RECYCLING CODE, CAVITY ID AND DATE CODE.
F-1. PARTS MUST BE FREE OF DISCOLORATION, SALT RESIDUE AND OTHER IMPERFECTIONS THAT AFFECT FIT OR FUNCTION.
F-2. SCRATCHES OR DENTS NOT TO EXCEED 0.013mm IN DEPTH.
G. FOLLOWING PRODUCTION CODES TO BE PERMANENTLY MARKED & HUMAN READABLE TO A LETTER HEIGHT OF 1.5 ±0.5MM X 0.3 MAX DEEP
   1. MATERIAL #: XXXXX-XXXX
   2. DATE CODE: JJJY (JULIAN DAY, LAST DIGIT OF YEAR)
   3. INSPECTION MACHINE CODE + SERIAL #: X_XXXXX

3. DESIGN - MANUFACTURING:

A. DRAFT TO BE WITHIN TOLERANCE.
B. ALLOWABLE FLASH MAX 0.2 HIGH X MAX 0.13 THICK.
C. ALLOWABLE PARTING LINE MISMATCH 0.2 MAX.
D. EJECTOR PINS MARK TO BE FLUSH TO 0.25 MAX DEPRESSED.
E. ALLOWABLE GATE VESTIGE FLUSH TO 0.25 MAX PROTRUSION.
F. NO EXTERNAL MOLD RELEASE AGENT ALLOWED DURING MANUFACTURING.
G. STEEL THAT FORMS THE INDICATED SURFACE MUST BE POLISHED WITH A DIAMOND FINISH (SPI A-2) OVER THE FULL PERIPHERY OF THE TOOL. SURFACE MUST HAVE NO MISMATCH.
H. ANY PROCESS LUBRICANT REMAINING ON THE TERMINAL MUST NOT VARNISH OR DEGRADE IT'S ELECTRICAL PERFORMANCE UP TO A MAXIMUM CLASS AMBIENT TEMPERATURE PER SAE USCAR-2 FOR 1008 HOURS. PROCESS LUBRICANTS SHOULD BE APPROVED BY THE RESPONSIBLE ENGINEER.
J. OPTIONAL FEATURES PROVIDED FOR AUTOMATION.
K. PART MUST BE FREE FROM BURRS AND SHARP EDGES, WHICH MIGHT BE DETRIMENTAL TO SATISFACTORY ASSEMBLY, SAFE HANDLING OR FUNCTION OF PART.
L. PARTS AS DELIVERED TO ASSEMBLY SHALL BE CLEAN AND FREE OF DEBRIS, RESIDUAL ABRASIVE MATERIAL AND CORROSION PRODUCTS ADVERESLY AFFECTING FUNCTION OR APPEARENCE.
M. RESTRICTED AND REPORTABLE SUBSTANCES FOR PARTS PER GMW3059.

NOTES: UNLESS OTHERWISE SPECIFIED

4. SYSTEM REQUIREMENTS:

   A. HARNESS CONNECTOR IS COMPATIBLE WITH THE FOLLOWING SAE WIRE SIZE NO'S:
      14, MEETING SAE J1128
      18, MEETING SAE J1128, MAX O.D. OF 2.06 MM
      20, MEETING SAE J1128
      22, MEETING SAE J1128, MIN O.D. OF 1.47 MM

   B. CABLE TIE SPECIFICATIONS:
      1. CABLE TIE:
         TENSILE RATING: 220N / (50lbs) MIN
         TIE LENGTH: 186mm MIN
         TIE WIDTH: 4.75mm MAX
         MATERIAL: NYLON
      2. INSTALLATION:
         CABLE TIE TENSION: 190N MIN
      3. DRESSED WIRE BUNDLE PACKAGING: SEE FIG. 1

   C. WHEN MATED WITH COMPONENT CONNECTOR INTERFACE AND/OR DRESS COVER, HARNESS CONNECTOR SYSTEM CONFORMS TO THE FOLLOWING:
      1. SAE/USCAR-2, REV: 3 APRIL, 2001; CLASS 3
      2. FIELD CORRELATED LIFE TEST, SAE/USCAR-20, NOV. 2001
      3. GMW #3191 AUGUST 22, 2000 (DRAFT); TEMPERATURE CLASS 3, SEALING CLASS 1, VIBRATION CLASS 2
      4. RESTRICTED AND REPORTABLE CHEMICALS PER GMW #3059, REV: D AUGUST 2002
      5. TPA USER FORCES (FULLY POPULATED WITH TERMINALS)
         a. REMOVAL FROM LOCK TO PRE-SET: <=120N

   D. WIRE SPECIFICATIONS:
      1. WIRE SURFACE MUST BE FREE OF SCRATCHES, GROOVES OR DENTS WHERE FUNCTIONAL

5. TERMINAL CURRENT RATINGS:

   ALL TESTING DONE IN ACCORDANCE WITH USCAR-2 REV5 SECTION 5.3

   A. MX64 RCPT TERM
      1. MX64 RCPT TERM Ag 18/20 GAGE CRIMPED TO SAE WIRE SIZE NO.18 AND MATED TO MX123 0.64MM PIN: 11.3 AMPS
      2. MX64 RCPT TERM Ag 22 GAGE CRIMPED TO SAE WIRE SIZE NO.22 AND MATED TO MX123 0.64MM PIN:8.5 AMPS

WIRE	CURRENT RATING			
	23'C	85'C	105'C	125'C
18AWG	11.3A	11.3A	9.5A	6.6A
20AWG	10.0A	10.0A	8.3A	5.7A
22AWG	8.6A	8.6A	7.1A	5.0A

   B. 2.8MM RCPT TERM
      1. 2.8MM RCPT TERM TIN 14 GAGE CRIMPED TO SAE WIRE SIZE NO.14 AND MATED TO MX123 2.8MM BLADE: 25.6 AMPS

6. CONTACT MOLEX AUTOMOTIVE FOR AVAILABLE CUSTOM PATTERNS OF CAVITIES OPEN FOR CIRCUITS

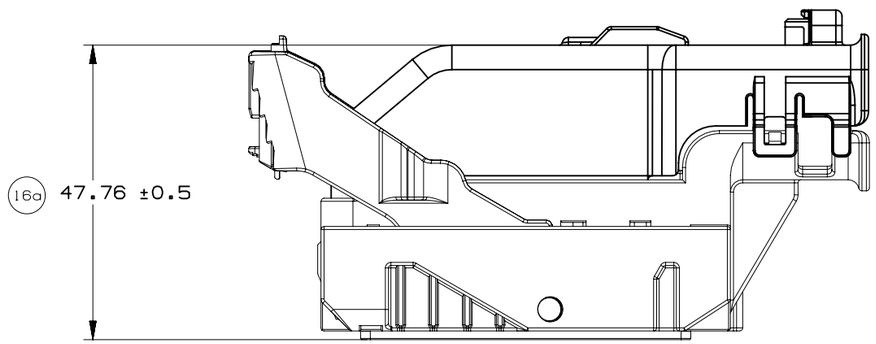

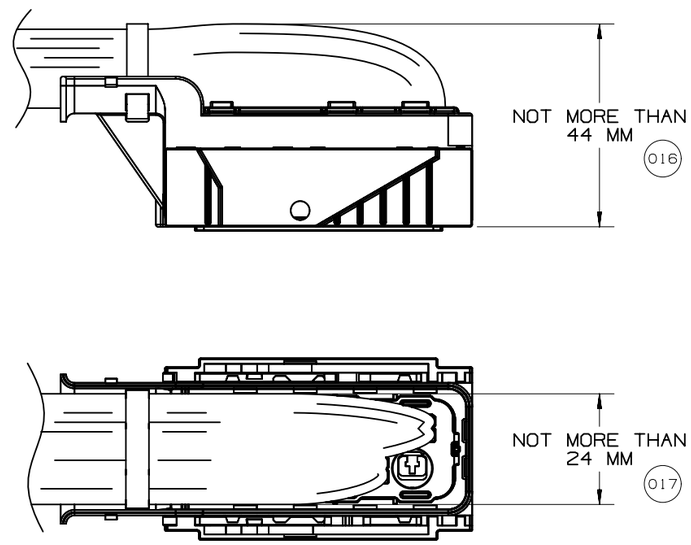

Fig. 1

GM	PAGE TITLE WIRE DRESS PACKAGING DIMENSIONS		DRAWING NUMBER 12642695	DWG STATUS			PAGE NUMBER
				ST	REV	PDI	
				R	002		8 OF 21

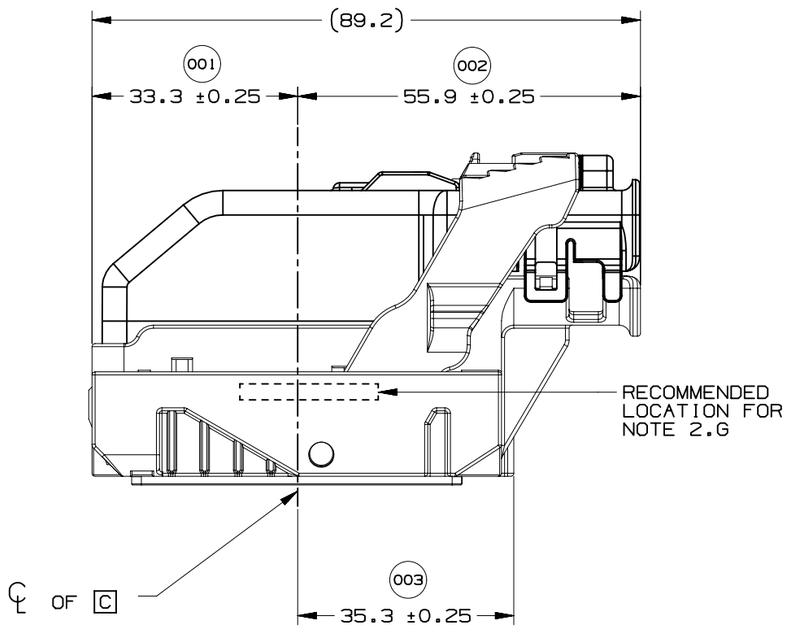

WIRE DRESS OPTION 0 SHOWN

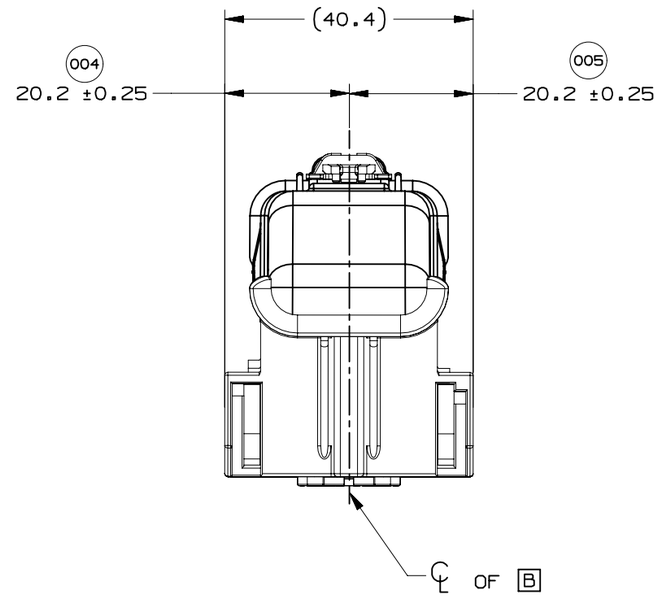

WIRE DRESS OPTION 0 SHOWN

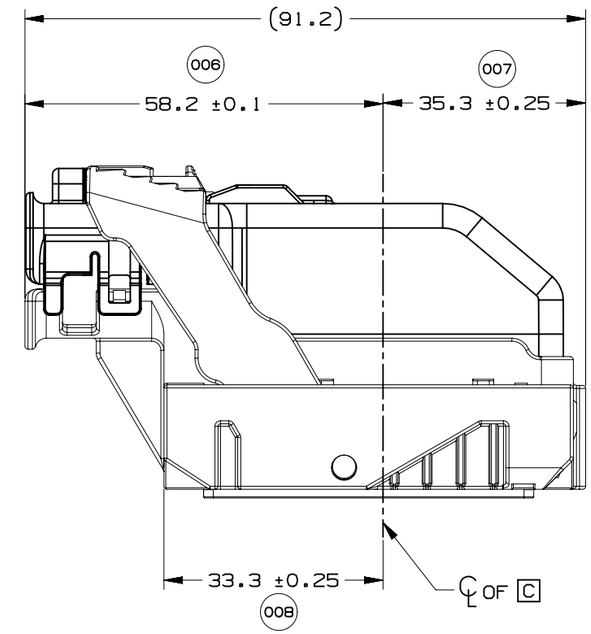

WIRE DRESS OPTION 9 SHOWN

	GM	PAGE TITLE LOCATION AND PACKAGING DIMENSIONS REFERENCING INTERFACE DATUMS B & C		DRAWING NUMBER 12642695	DWG STATUS ST: R REV: 002 PDI:	PAGE NUMBER 9 OF 21	

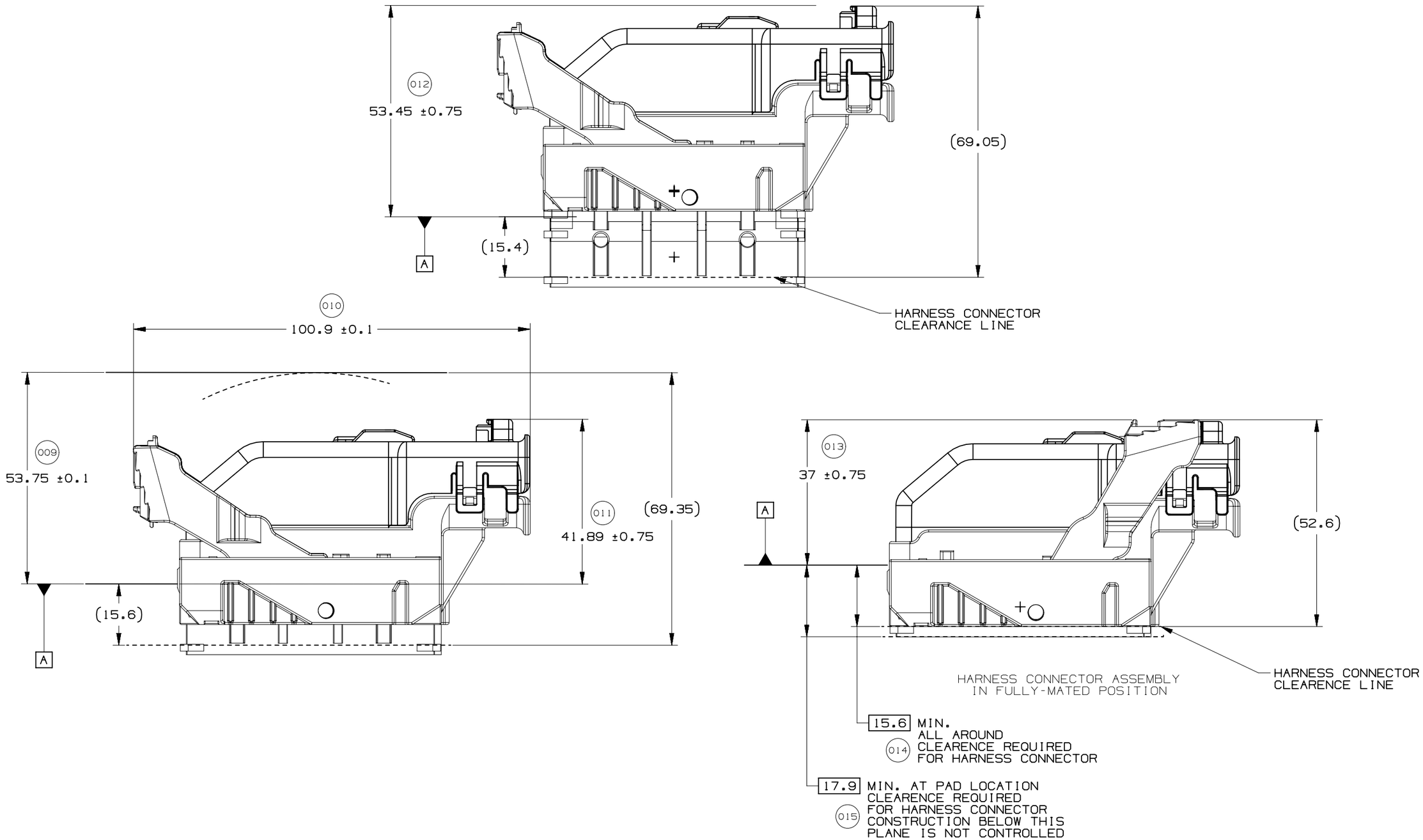

GM	PAGE TITLE LOCATION AND PACKAGING DIMENSIONS REFERENCING INTERFACE DATUM A		DRAWING NUMBER 12642695	DWG STATUS ST: R	REV: 002	PDI:	PAGE NUMBER 10 OF 21

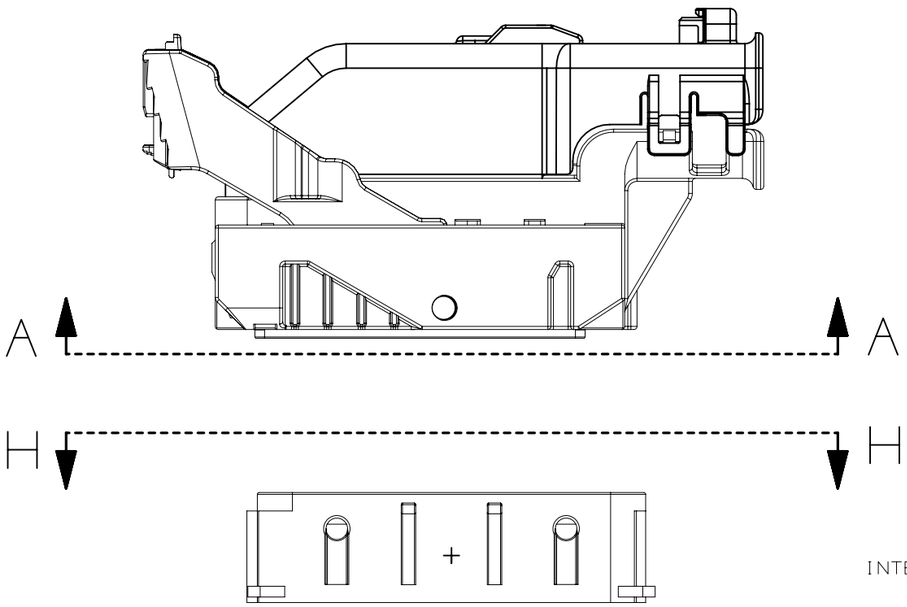

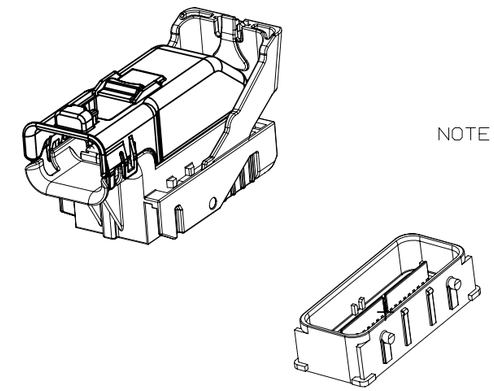

NOTE: REFERENCE THE COMPONENT TABLE
FOR KEY OPTIONS AND CONFIGURATIONS

INTERFACE SIDE SHOWN ON ALL SECTION VIEWS

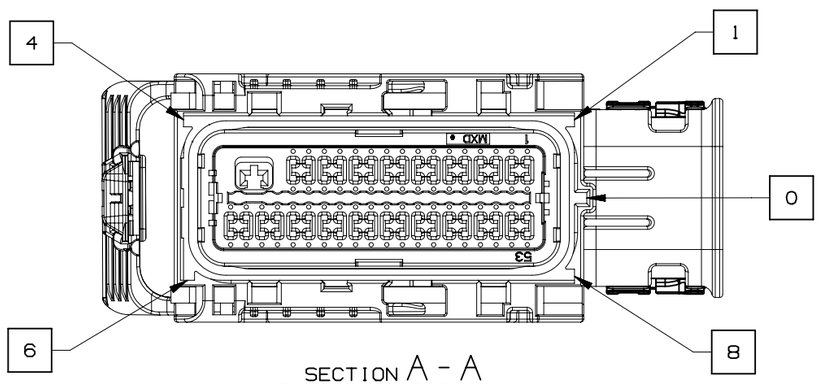

SECTION A - A
KEY OPTION B SHOWN

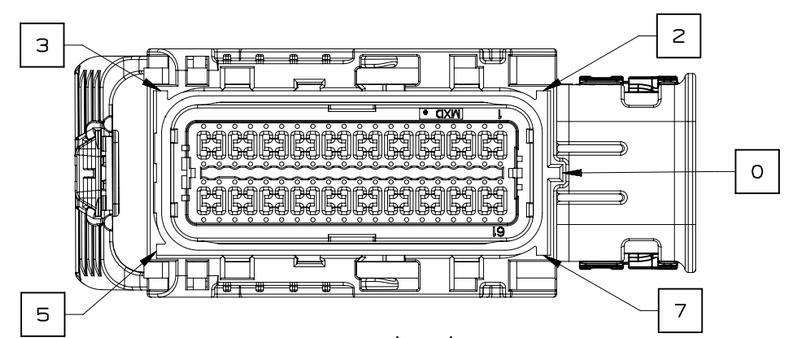

SECTION A - A
KEY OPTION K SHOWN

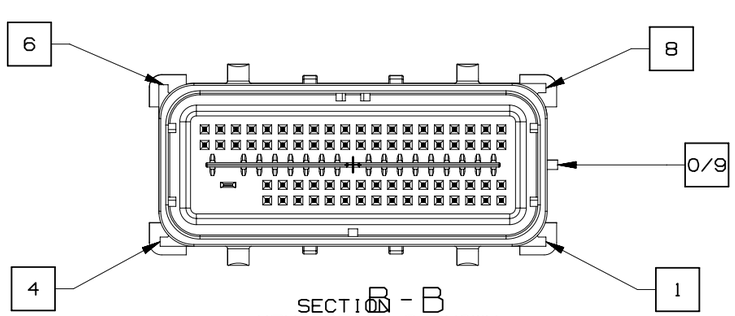

SECTION B - B
KEY OPTION B SHOWN

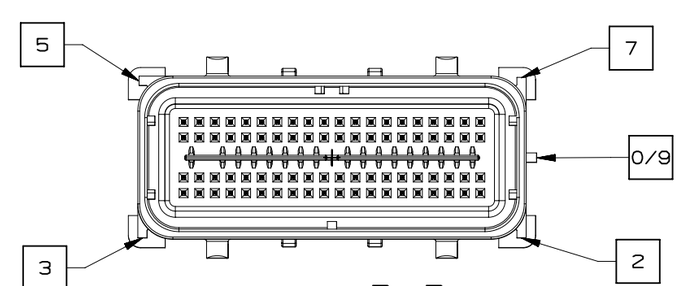

SECTION B - B
KEY OPTION K SHOWN

GM	PAGE TITLE KEY ID REF - WIRE DRESS OPTION 0		DRAWING NUMBER 12642695	DWG STATUS ST: R	REV: 002	PDI:
						PAGE NUMBER 11 OF 21

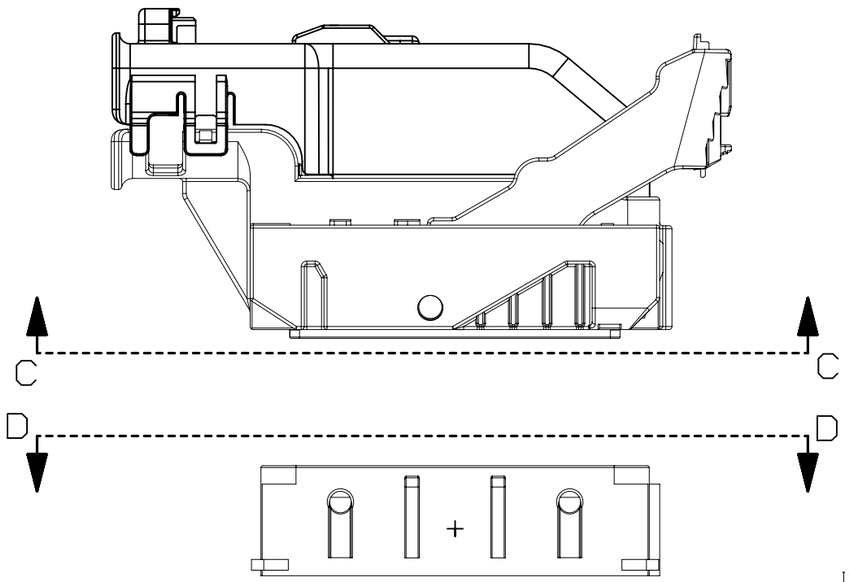

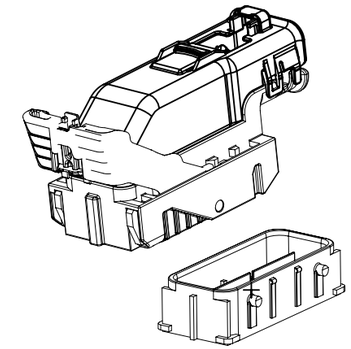

NOTE: REFERENCE THE COMPONENT TABLE
FOR KEY OPTIONS AND CONFIGURATIONS

VIEW V

INTERFACE SIDE SHOWN ON ALL SECTION VIEWS

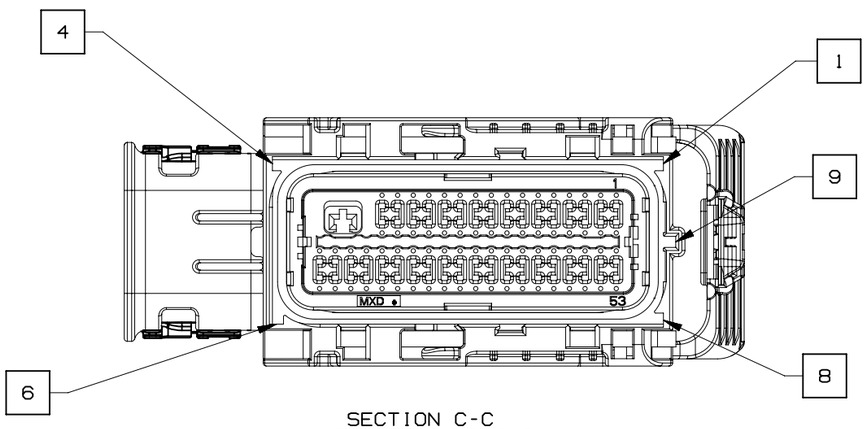

SECTION C-C
KEY OPTION B SHOWN

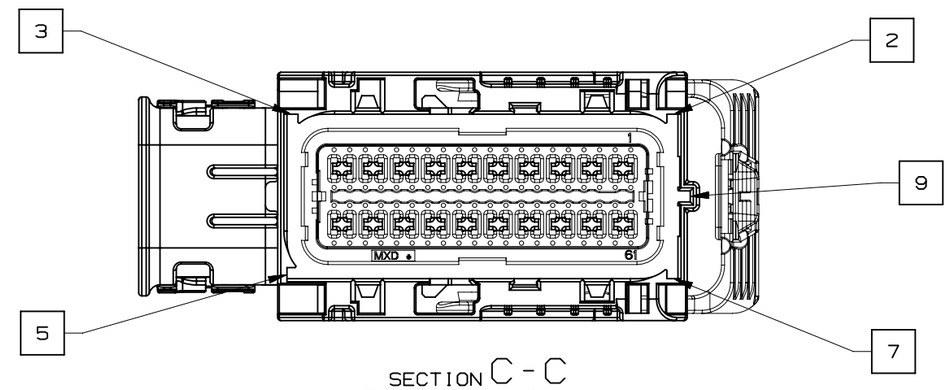

SECTION C - C
KEY OPTION K SHOWN

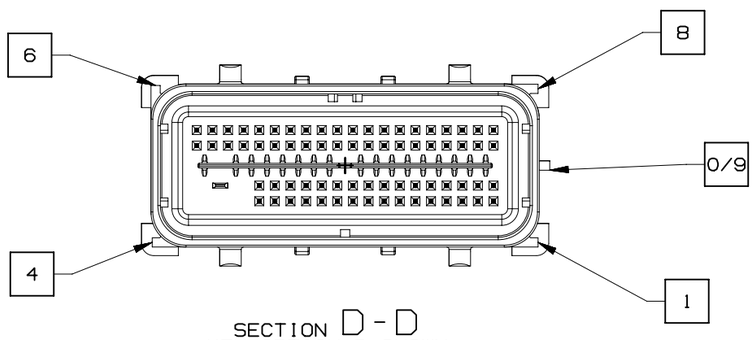

SECTION D - D
KEY OPTION B SHOWN

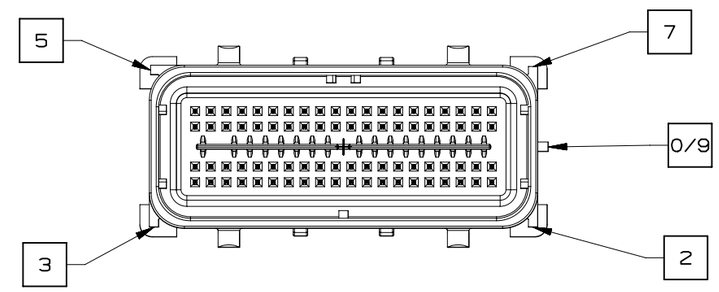

SECTION D - D
KEY OPTION K SHOWN

GM	PAGE TITLE KEY ID REF - WIRE DRESS OPTION 9		DRAWING NUMBER 12642695	DWG STATUS ST: R	REV: 002	PDI:	PAGE NUMBER 12 OF 21

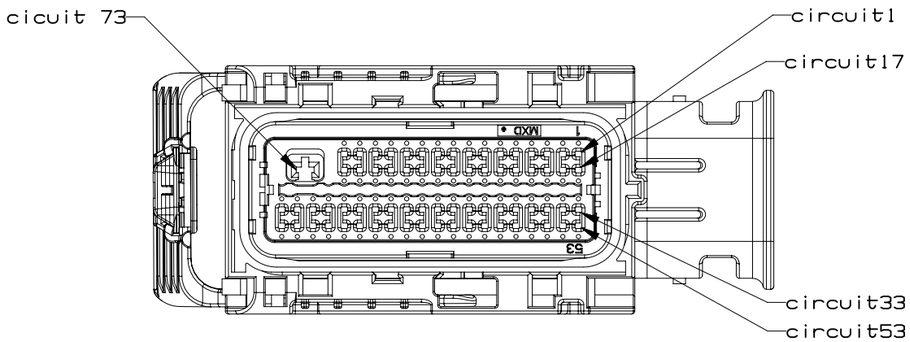

73 CKT HARNESS CONNECTOR ASSEMBLY
WIRE DRESS OPTION 0

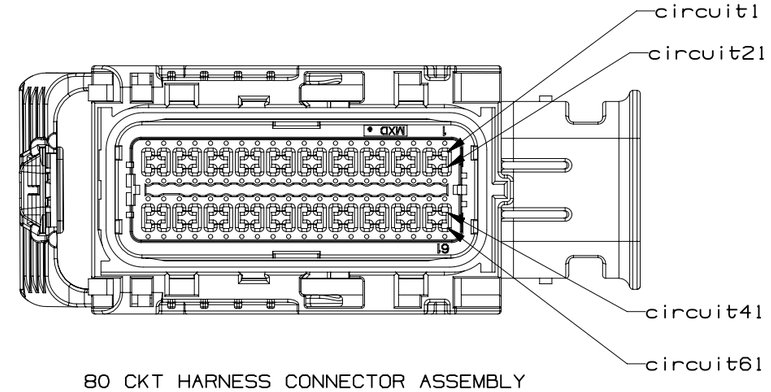

80 CKT HARNESS CONNECTOR ASSEMBLY
WIRE DRESS OPTION 0

INTERFACE SIDE SHOWN ON ALL VIEWS

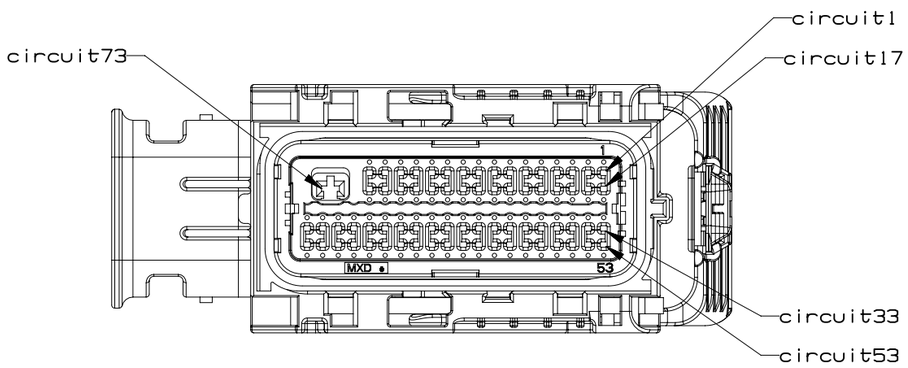

73 CKT HARNESS CONNECTOR ASSEMBLY
WIRE DRESS OPTION 9

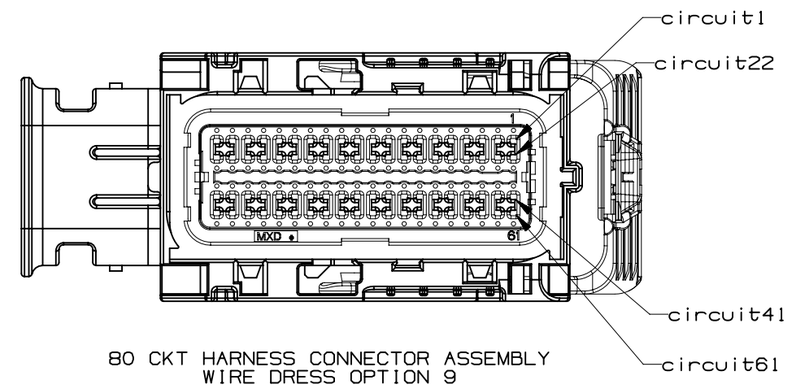

80 CKT HARNESS CONNECTOR ASSEMBLY
WIRE DRESS OPTION 9

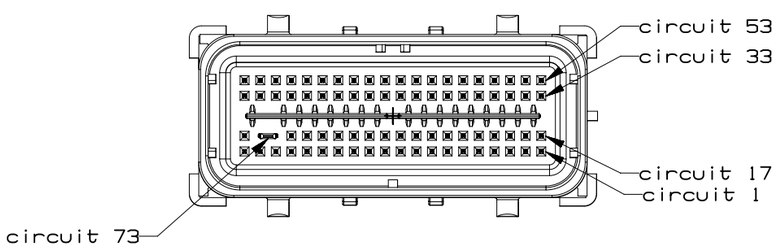

73 CKT COMPONENT CONNECTOR INTERFACE

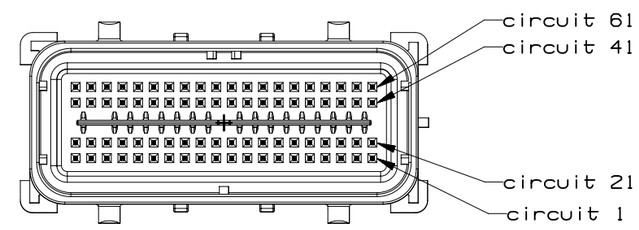

80 CKT COMPONENT CONNECTOR INTERFACE

	PAGE TITLE	DRAWING NUMBER	DWG STATUS			PAGE NUMBER
			ST	REV	PDI	
GM	CIRCUIT CONFIGURATIONS	12642695	R	002		13 OF 21

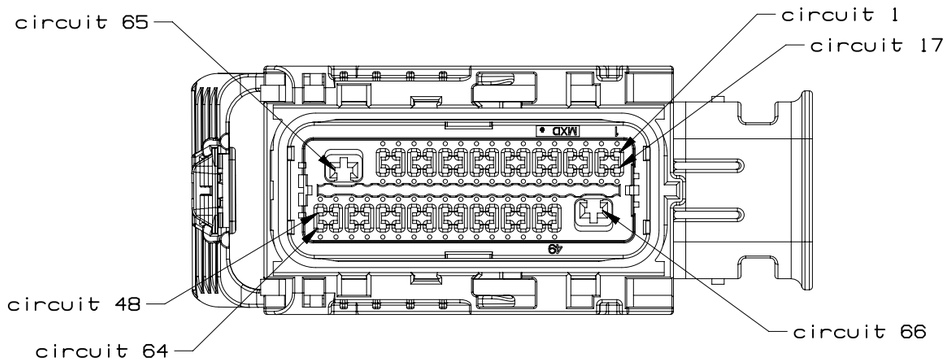

66 CKT HARNESS CONNECTOR ASSEMBLY
WIRE DRESS OPTION O

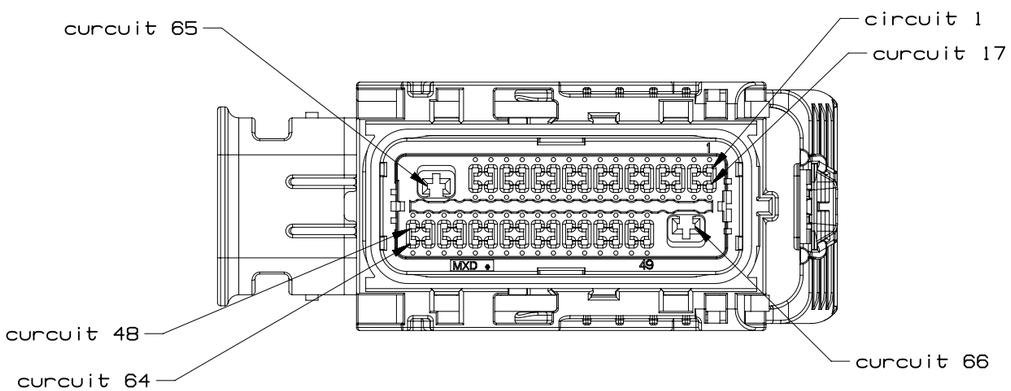

66 CKT HARNESS CONNECTOR ASSEMBLY
WIRE DRESS OPTION 9

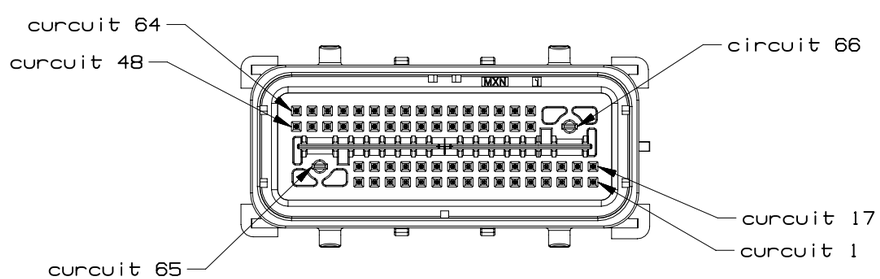

66 CKT COMPONENT CONNECTOR INTERFACE

GM	PAGE TITLE CIRCUIT CONFIGURATIONS		DRAWING NUMBER 12642695	DWG STATUS ST: R	REV: 002	PDI:	PAGE NUMBER 14 OF 21

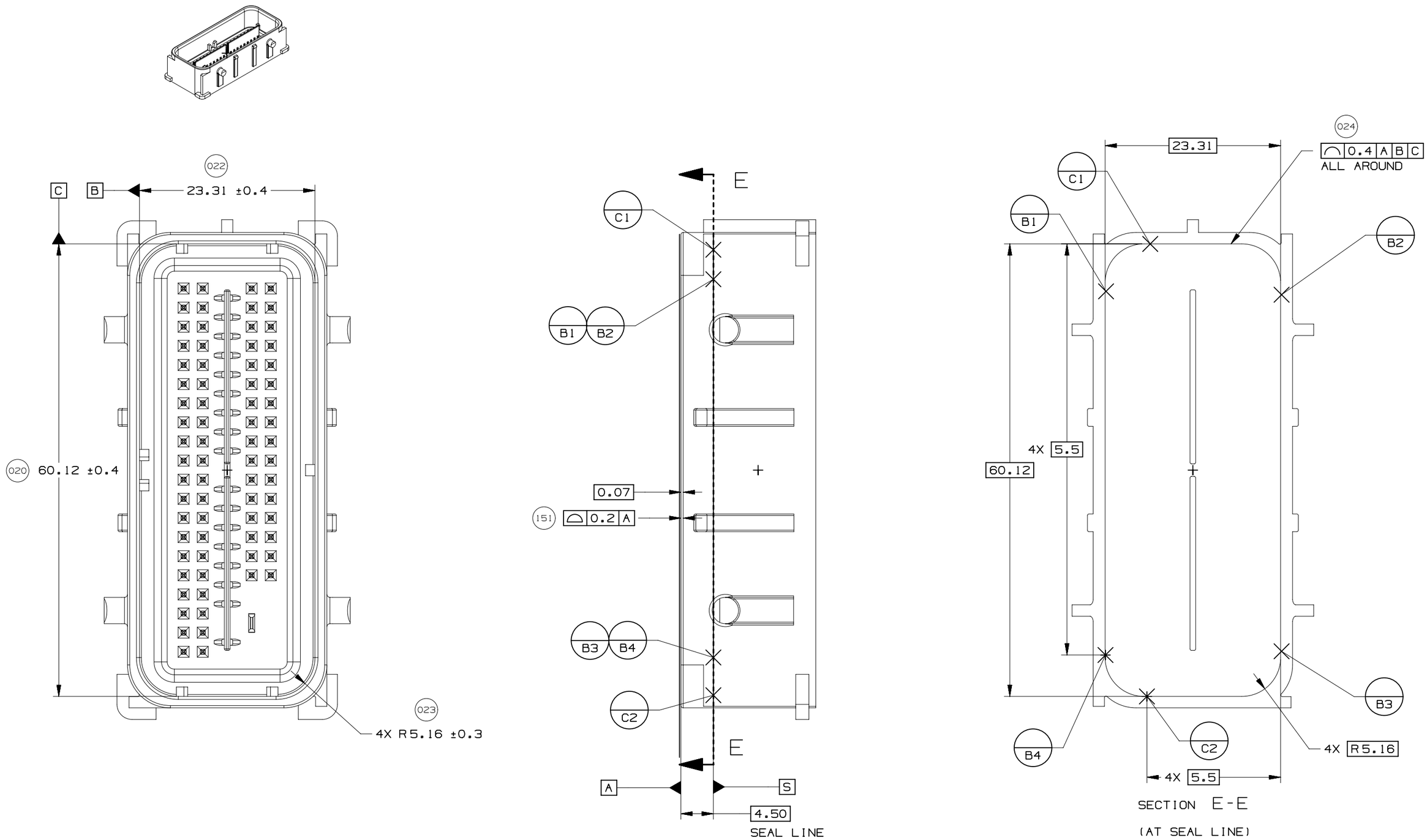

UNLESS SPECIFIED, TOLERANCE OF THE COMPONENT CONNECTOR INTERFACE TO BE 0.13 A B C

GM	PAGE TITLE COMPONENT CONNECTOR INTERFACE		DRAWING NUMBER 12642695	DWG STATUS ST: R REV: 002 PDI:	PAGE NUMBER 15 OF 21	

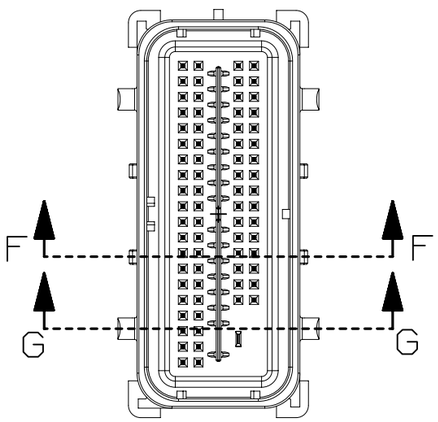

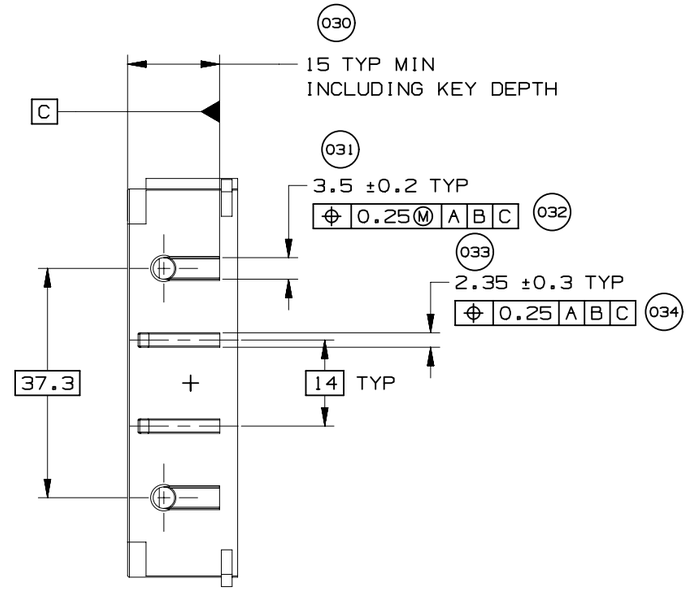

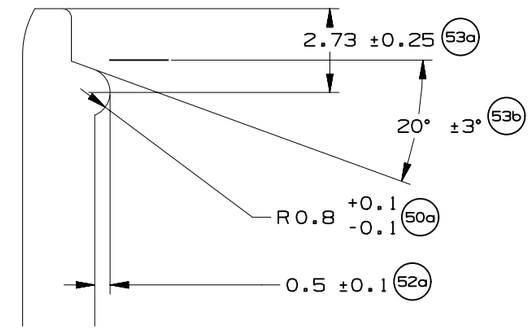

VIEW YY
SCALE 5:1

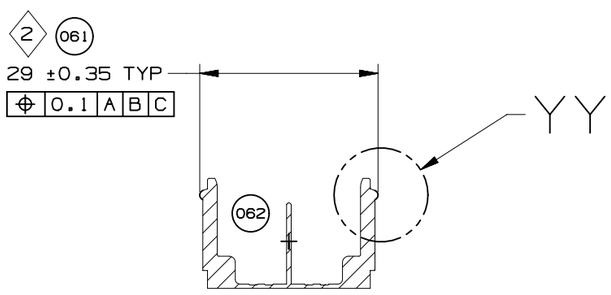

SECTION F-F

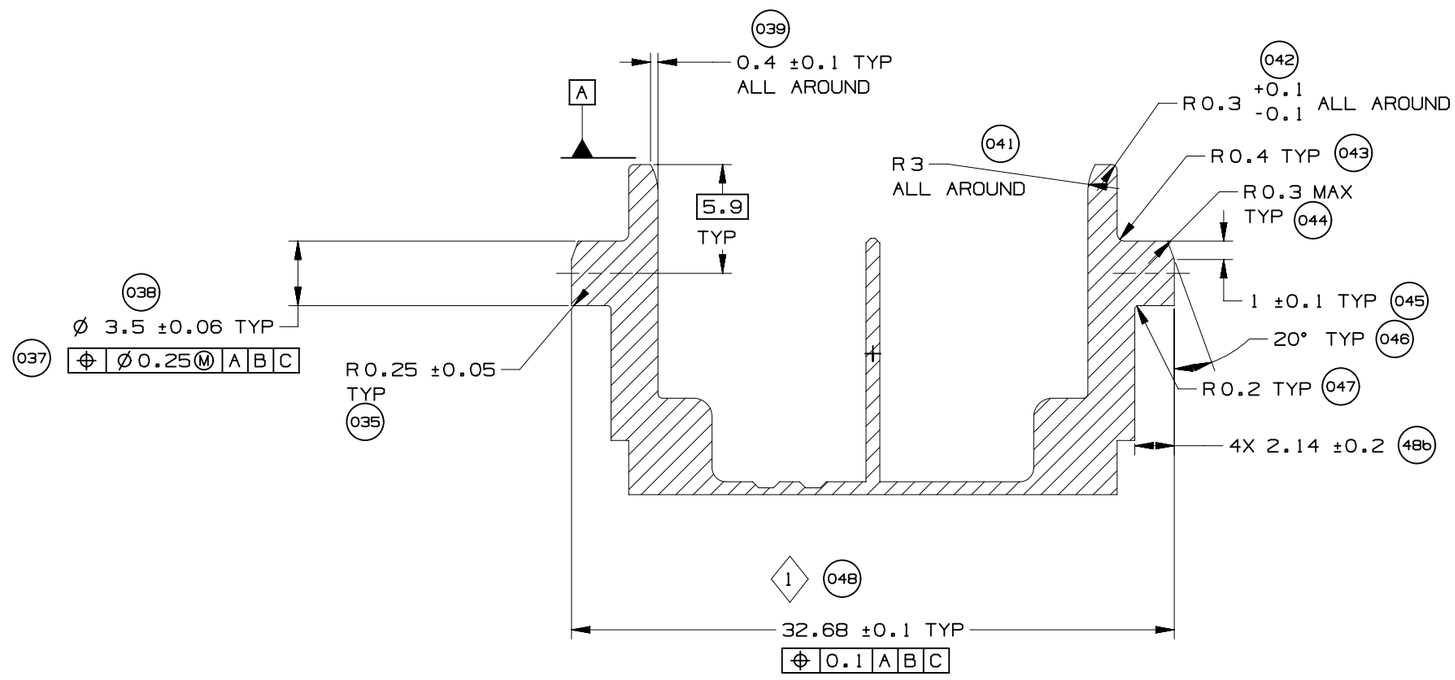

SECTION G-G
(CAM POST)

GM	PAGE TITLE COMPONENT CONNECTOR INTERFACE		DRAWING NUMBER 12642695	DWG STATUS ST: R	REV: 002	PDI:	PAGE NUMBER 16 OF 21

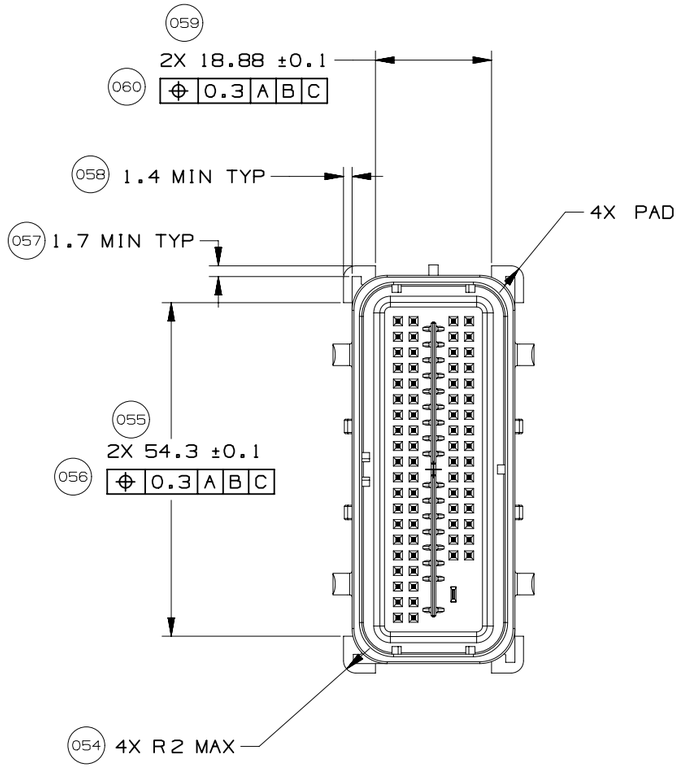

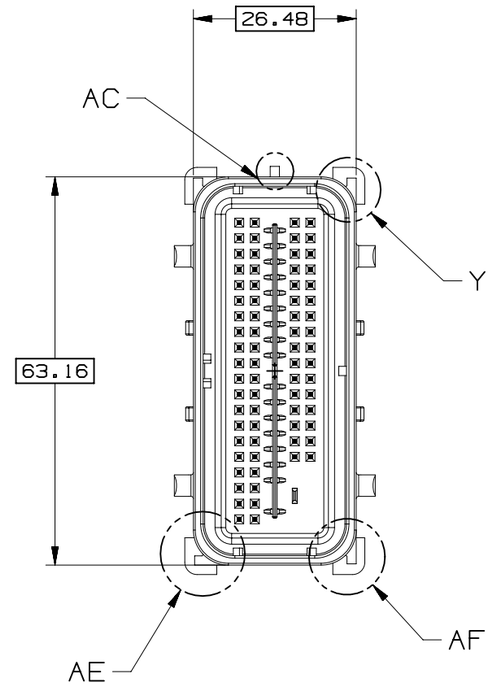

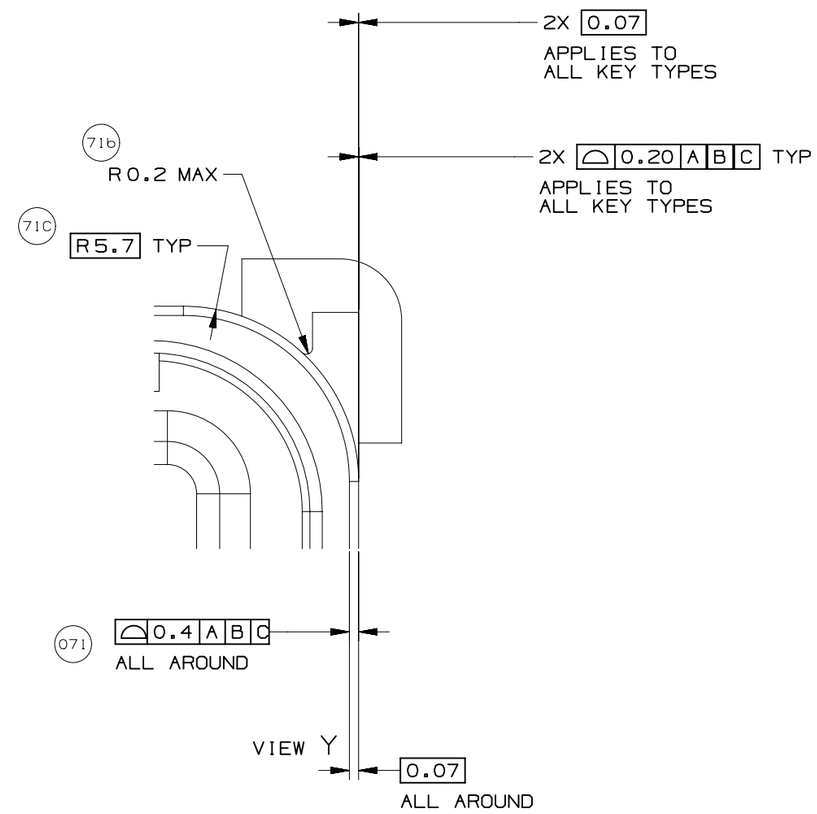

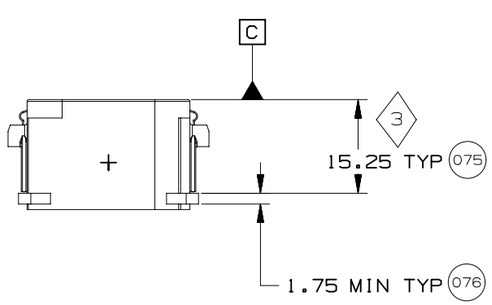

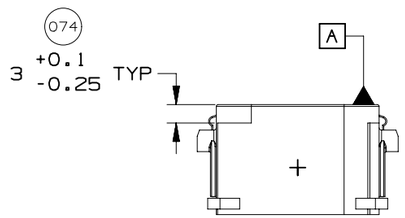

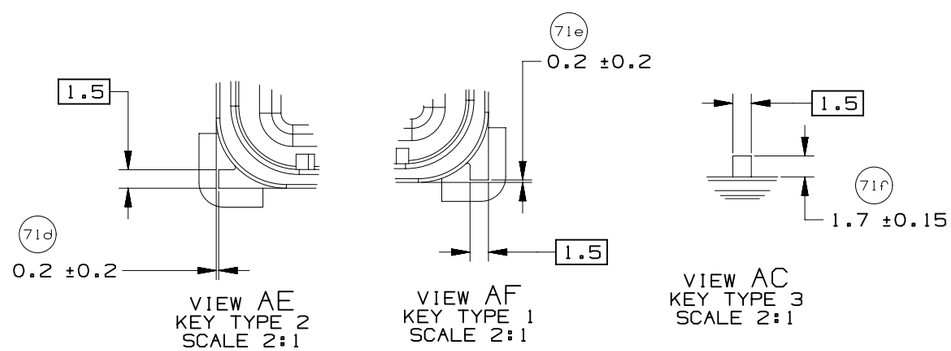

GM	PAGE TITLE COMPONENT CONNECTOR INTERFACE		DRAWING NUMBER 12642695	DWG STATUS ST: R REV: 002 PDI:	PAGE NUMBER 17 OF 21	

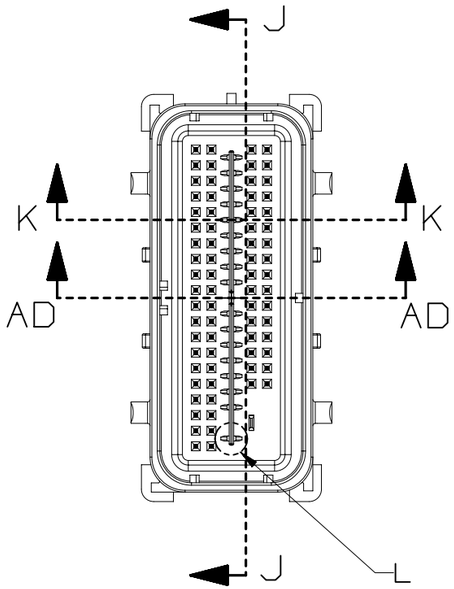

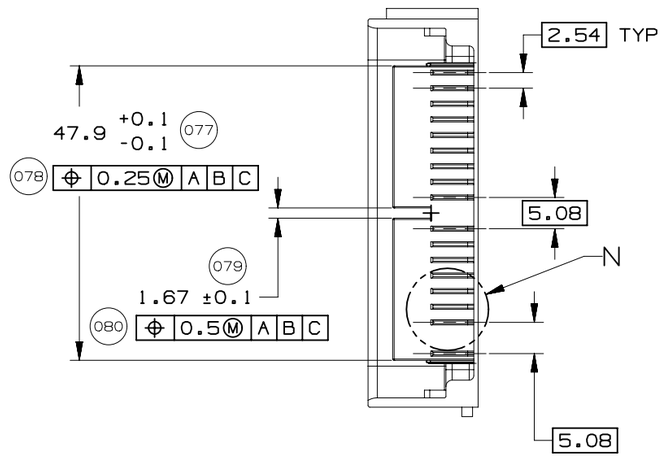

SECTION J-J

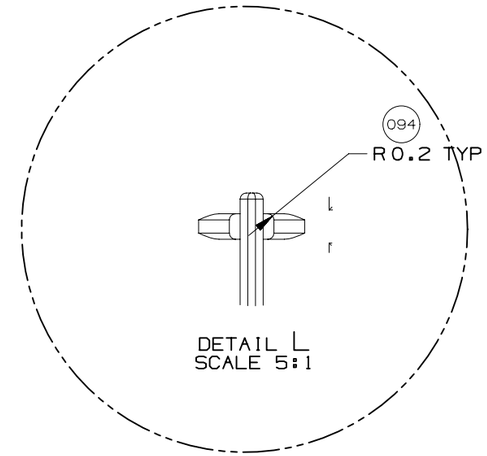

DETAIL L
SCALE 5:1

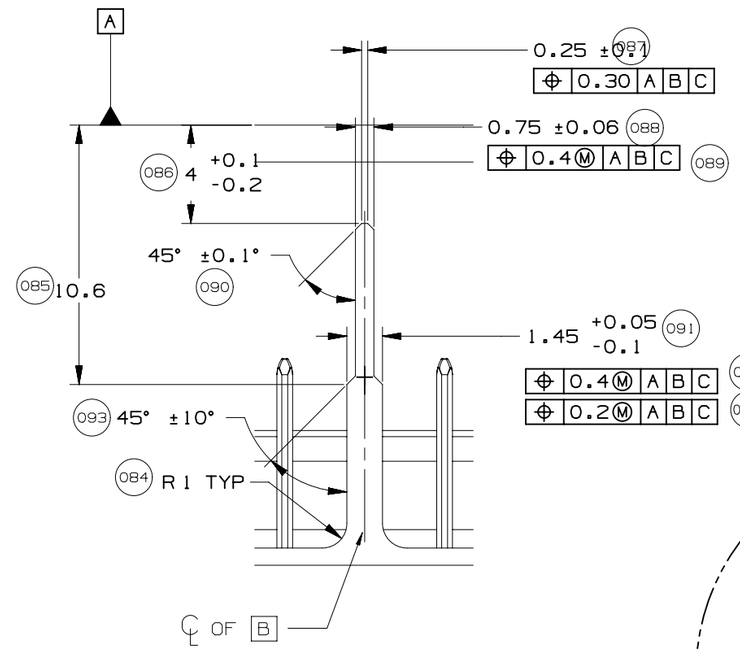

DETAIL M
TYPICAL
SCALE 4:1

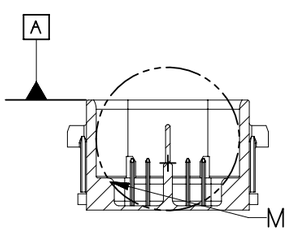

SECTION K-K

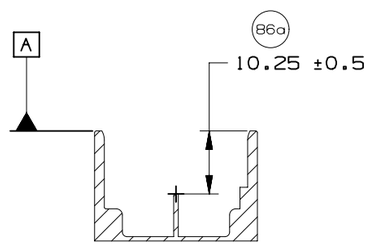

SECTION AD-AD

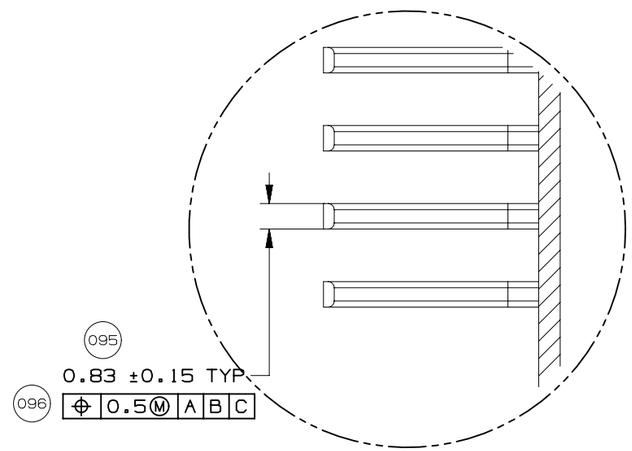

DETAIL N
SCALE 5:1

GM	PAGE TITLE COMPONENT CONNECTOR INTERFACE		DRAWING NUMBER 12642695	DWG STATUS ST: R REV: 002 PDI:	PAGE NUMBER 18 OF 21

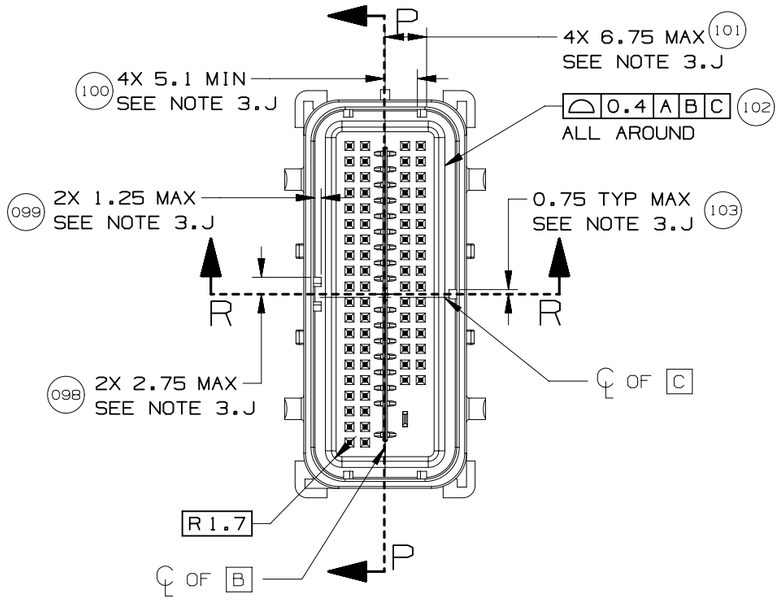

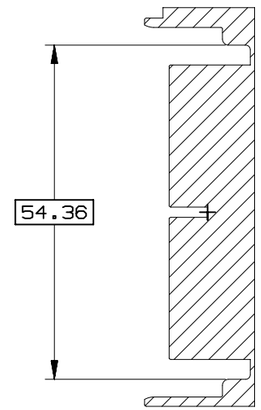

SECTION P-P

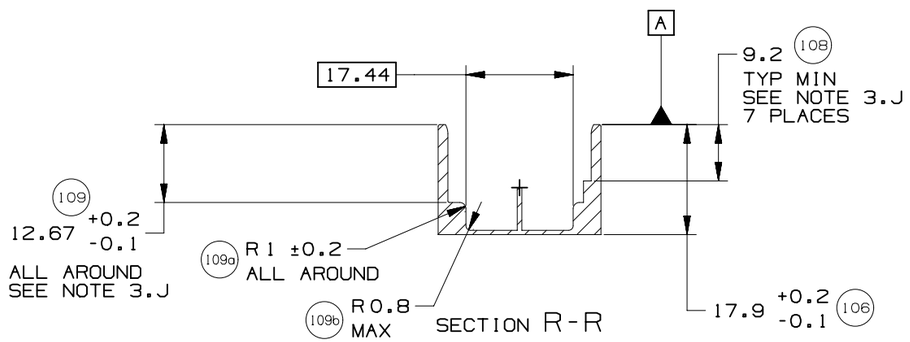

SECTION R-R

	GM	PAGE TITLE COMPONENT CONNECTOR INTERFACE		DRAWING NUMBER 12642695	DWG STATUS ST: R	REV: 002	PDI:	PAGE NUMBER 19 OF 21

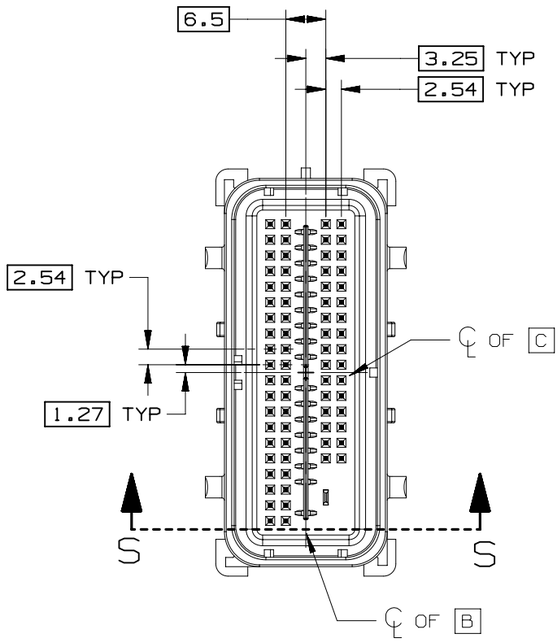

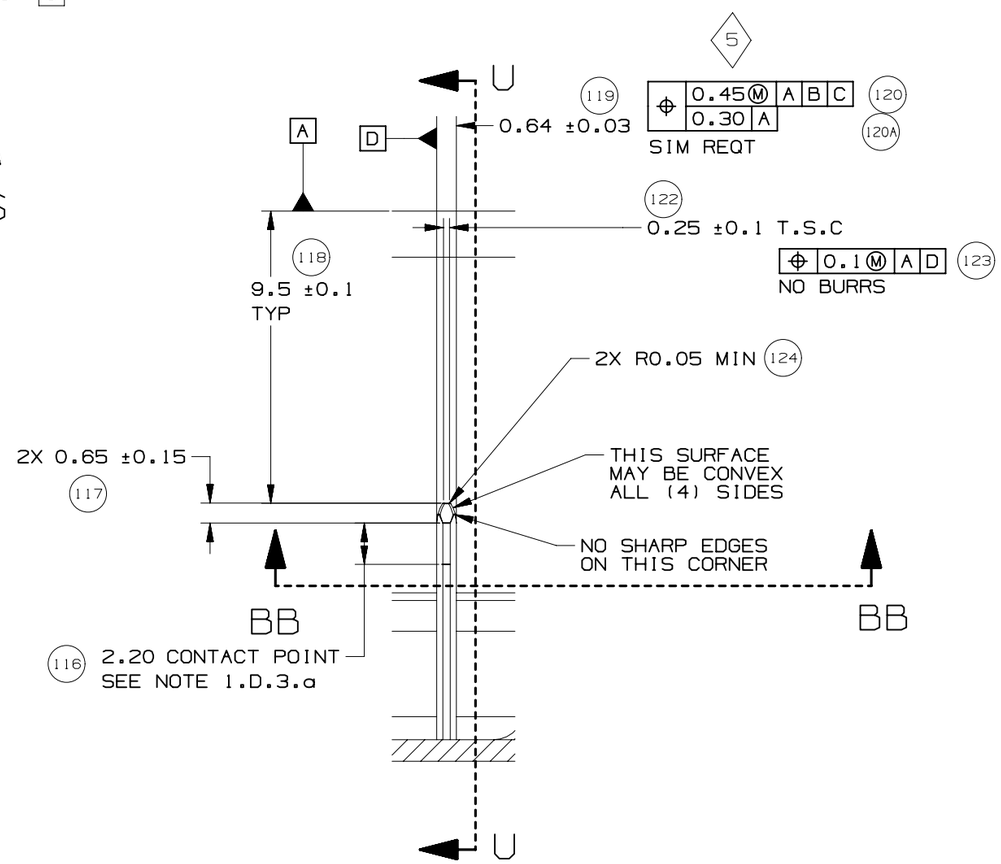

DETAIL T
TYPICAL
SCALE 5:1

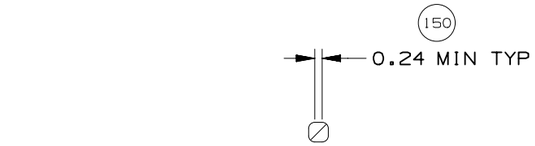

SECTION BB-BB

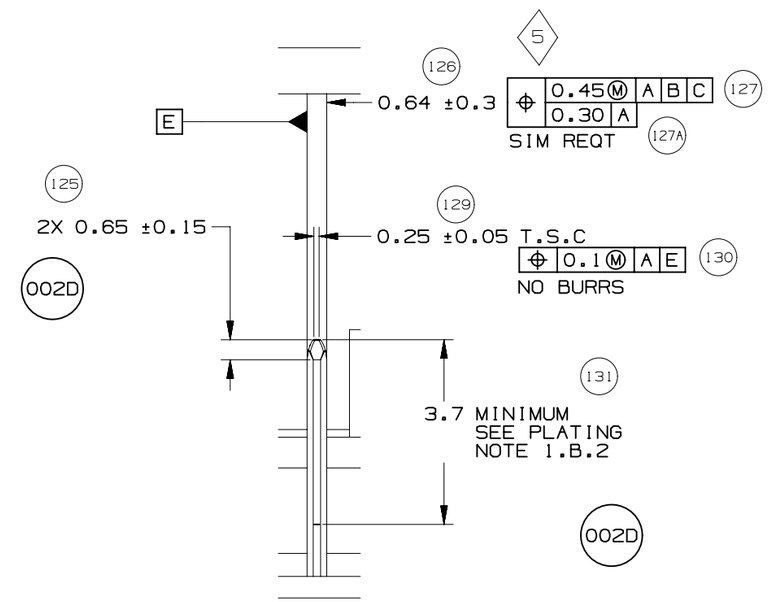

SECTION U-U

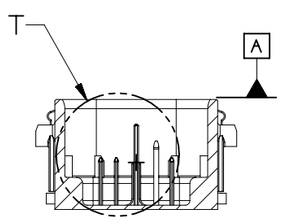

SECTION S-S

GM	PAGE TITLE COMPONENT CONNECTOR INTERFACE		DRAWING NUMBER 12642695	DWG STATUS ST: R REV: 002 PDI:	PAGE NUMBER 20 OF 21	

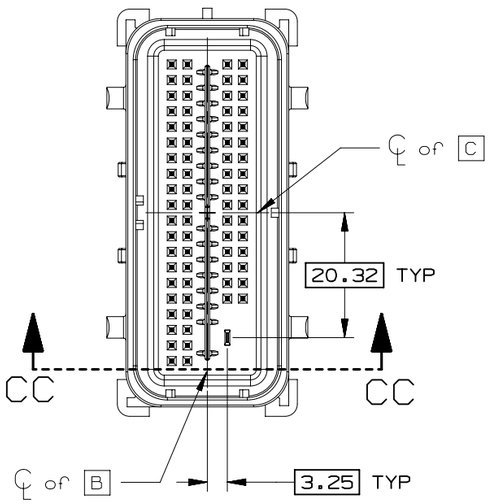

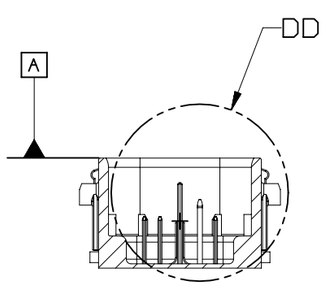

SECTION CC-CC

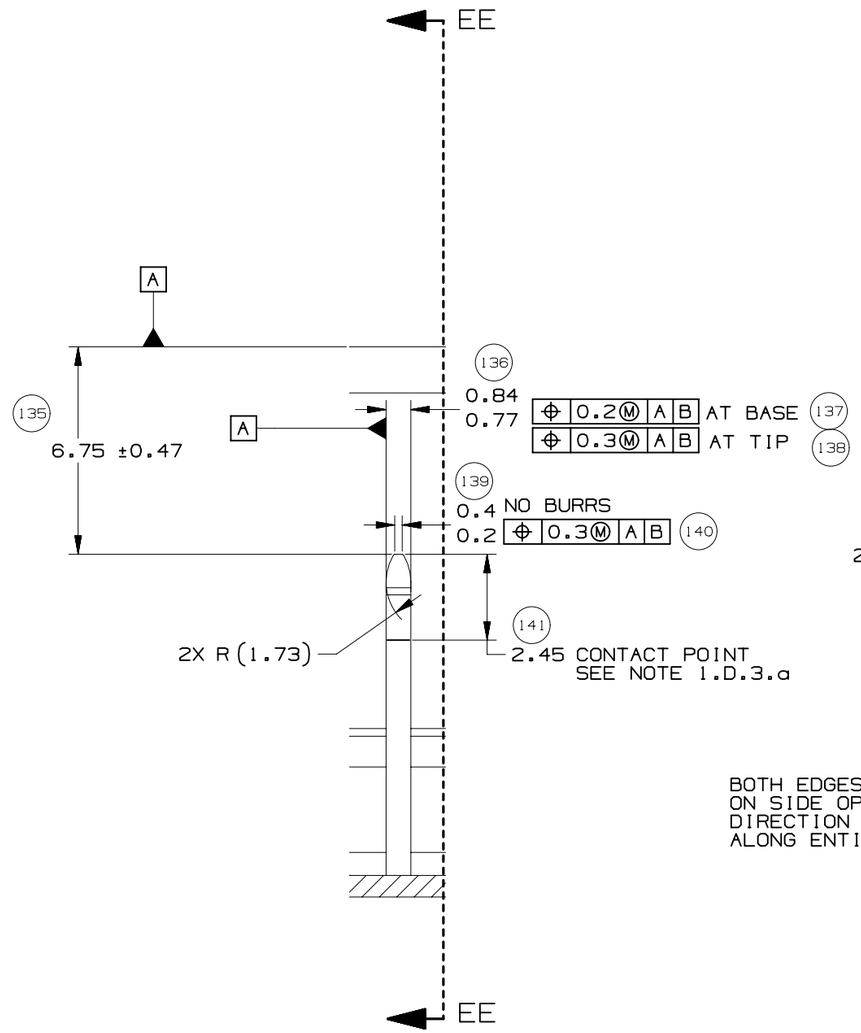

DETAIL DD
TYPICAL
SCALE 5:1

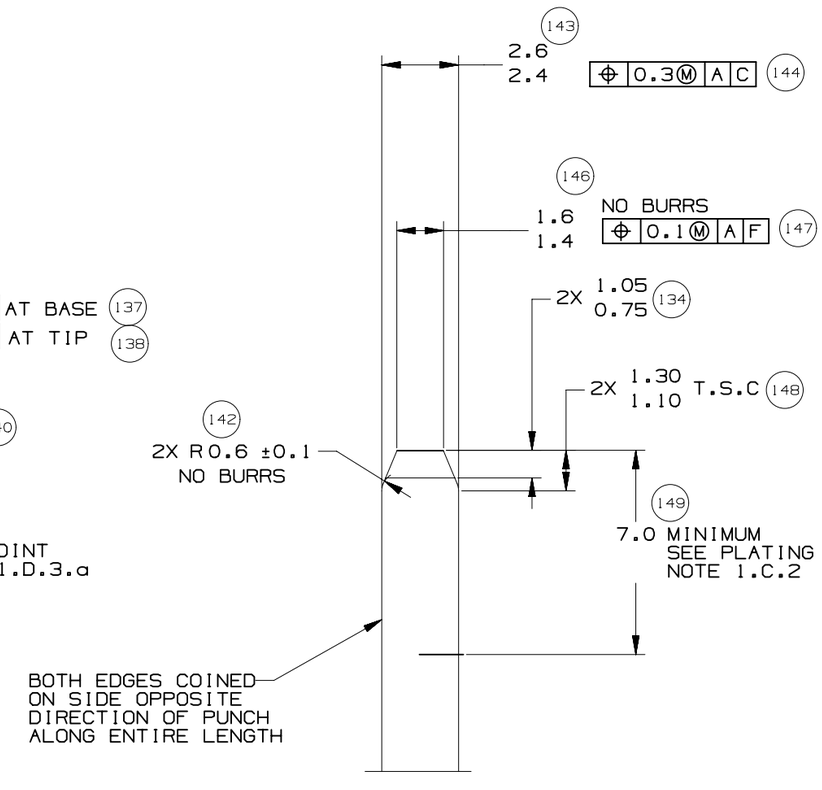

SECTION EE-EE
TYPICAL

GM	PAGE TITLE COMPONENT CONNECTOR INTERFACE		DRAWING NUMBER 12642695	DWG STATUS ST: R	REV: 002	PDI:	PAGE NUMBER 21 OF 21

INDEX

PAGE TITLE	PAGE
TITLE BLOCK	1
REVISION BLOCK	2
PART BLOCK	3
KPC BLOCK	4
COMPONENT TABLE	5
NOTES	6
NOTES	7
WIRE DRESS PACKAGING DIMENSIONS	8
LOCATION AND PACKAGING DIMENSIONS REFERENCING INTERFACE DATUMS B & C	9
LOCATION AND PACKAGING DIMENSIONS REFERENCING INTERFACE DATUM A	10
KEY ID REF - WIRE DRESS OPTION 0	11
KEY ID REF - WIRE DRESS OPTION 9	12
CIRCUIT CONFIGURATIONS	13
CIRCUIT CONFIGURATIONS	14
COMPONENT CONNECTOR INTERFACE	15
COMPONENT CONNECTOR INTERFACE	16
COMPONENT CONNECTOR INTERFACE	17
COMPONENT CONNECTOR INTERFACE	18
COMPONENT CONNECTOR INTERFACE	19
COMPONENT CONNECTOR INTERFACE	20
COMPONENT CONNECTOR INTERFACE	21
ADDITIONAL COMPONENTS REQUIRED	22

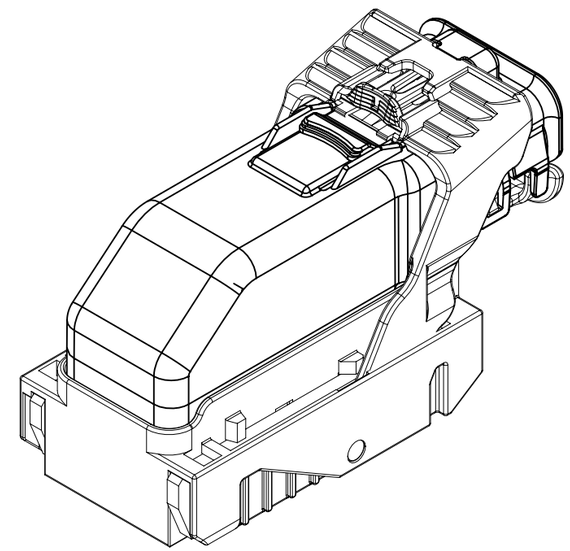

ISO VIEW

GM

UNLESS OTHERWISE SPECIFIED: THIS DOCUMENT IS IN ACCORDANCE WITH ASME Y14.5M-1994 AS AMMENDED BY THE GM GLOBAL DIMENSIONING AND TOLERANCING ADDENDUM-1997. ALL GEOMETRIC TOLERANCES AND RELATED DATUMS APPLY RFS. RULE #1 (PERFECT FORM AT MMC) DOES NOT APPLY WHEN A RELATIONSHIP BETWEEN FEATURES IS ESTABLISHED BY ORIENTATION OR LOCATION TOLERANCES. SEPARATE POSITION CALLOUTS MAY BE GAGED SEPARATELY REGARDLESS OF DATUM REFERENCES.

CHANGE RESTRICTED
NO MANUAL CHANGES

DO NOT SCALE

METRIC

DIMENSIONS SHOWN IN MILLIMETERS UNLESS OTHERWISE SPECIFIED

REFERENCE
12H (MOLEX AUTOMOTIVE)

	DATE
DRAFTER	05JN15
APVD1	
APVD2	
APVD3	
APVD4	
APVD5	

DRAWING NAME
HARNESS CONN ASM-SEALED 52/66/73/80 CKTS,MX123

DRAWING NUMBER
12672833

DWG STATUS		
ST	REV	PDI
R	001	

PAGE NUMBER
1 OF 22

PAGE	DWG STATUS					REVISION HISTORY	AUTH	DR	CK	ENG
	DATE	ST	REV	CHG	PDI					
	05JN15	R	001			RELEASED TO PRODUCTION AT DLS A	CRMRJE	DFK		

PAGE	DWG STATUS					REVISION HISTORY	AUTH	DR	CK	ENG
	DATE	ST	REV	CHG	PDI					

GM	PAGE TITLE REVISION BLOCK		DRAWING NUMBER 12672833	DWG STATUS ST: R REV: 001 PDI:		PAGE NUMBER 2 OF 22

HIERARCHY /QUANTITY	DWG ITM	DWG RLTN SHIP	PART NUMBER	P-A ITM	DLS	ST	REV	PDI	NMCI	MASS (KG)	PART NAME	NOTES
	28	RD	12674821		A	C	001			0.000	YAZAKI: 7158-3114-90	2.8MM CAVITY PLUG
	27	RD	12674820		A		001			0.000	PLUG-WRG HARN CONN MX0.64	
	26	RD	12672851		A		001			0.000	TERM-AG 0.5MM/0.75MM ISO,MX64	
	25	RD	12672850		A		001			0.000	TERM-AG 0.35MM ISO,MX64	
	24	RD	12582676		A	C	003			0.011	WIRE HARNESS COVER	52/66/73/80 WAY
	23	RD	12672869		A	2	001			0.050	HARN CONN ASM 80 CKT	KEY J OPTION 9
	22	RD	12672871		A	2	001			0.050	HARN CONN ASM 80 CKT	KEY H OPTION 9
	21	RD	12672873		A	2	001			0.050	HARN CONN ASM 80 CKT	KEY G OPTION 9
	20	RD	12672868		A	2	001			0.050	HARN CONN ASM 80 CKT	KEY J OPTION 0
	19	RD	12672870		A	2	001			0.050	HARN CONN ASM 80 CKT	KEY H OPTION 0
	18	RD	12672872		A	2	001			0.050	HARN CONN ASM 80 CKT	KEY G OPTION 0
	17	RD	12672867		A	2	001			0.050	HARN CONN ASM 73 CKT	KEY F OPTION 9
	16	RD	12672865		A	2	001			0.050	HARN CONN ASM 73 CKT	KEY C OPTION 9
	15	RD	12672863		A	2	001			0.050	HARN CONN ASM 73 CKT	KEY B OPTION 9
	14	RD	12672861		A	2	001			0.050	HARN CONN ASM 73 CKT	KEY A OPTION 9
	13	RD	12672866		A	2	001			0.050	HARN CONN ASM 73 CKT	KEY F OPTION 0
	12	RD	12672864		A	2	001			0.050	HARN CONN ASM 73 CKT	KEY C OPTION 0
	11	RD	12672862		A	2	001			0.050	HARN CONN ASM 73 CKT	KEY B OPTION 0
	10	RD	12672860		A	2	001			0.050	HARN CONN ASM 73 CKT	KEY A OPTION 0
	09	RD	12672859		A	2	001			0.050	HARN CONN ASM 66 CKT	KEY C OPTION 9
	08	RD	12672857		A	2	001			0.050	HARN CONN ASM 66 CKT	KEY A OPTION 9
	07	RD	12672858		A	2	001			0.050	HARN CONN ASM 66 CKT	KEY C OPTION 0
	06	RD	12672856		A	2	001			0.050	HARN CONN ASM 66 CKT	KEY A OPTION 0
	05	RD	12672855		A	2	001			0.054	HARN CONN ASM 52 CKT	KEY C OPTION 9
	04	RD	12672853		A	2	001			0.050	HARN CONN ASM 52 CKT	KEY A OPTION 9
	03	RD	12672854		A	2	001			0.054	HARN CONN ASM 52 CKT	KEY C OPTION 0
	02	RD	12672852		A	2	001			0.050	HARN CONN ASM 52 CKT	KEY A OPTION 0
	01	RD	12672833		A		001			8.751	HARNESS CONN ASM-SEALED 52/66/73/80 CKTS,MX	
											DRAWING	

PARTS SHOWN ON DRAWING

KEY PRODUCT CHARACTERISTICS
(IN ACCORDANCE WITH QN 1805 OR QN 1050)

▽ SAFETY/COMPLIANCE	TOTAL ON DRAWING	4
◇ FIT/FUNCTION	LAST NO. USED	4

NO	TYPE	DESCRIPTION	RATIONALE	PAGE/ZONE
1	F/F	32.68	IMPROVE CONNECTOR SYSTEM MATING	16
2	F/F	29.00	INSURE PROPER RELEASE OF LEVER	16
3	F/F	15.25	INSURE FINAL MATE POSITION	17
4	F/F	POSITIONAL TOLERANCE (2 PLACES)	INSURE CONNECTOR SYSTEM MATEABILITY	20

					APPLICABLE COMPONENTS					
LINE	MFG.	MFG. P/N	GM P/N	EFFECTIVE DATE	DESCRIPTION	KEY OPTION	WIRE DRESS OPTION	KEY CONFIG.	COLOR	STATUS
-										
1	MOLEX	34565-0003	12582676	02JN03	MX123 DRESS COVER 52/66/73/80 CKT	N/A	N/A	N/A	BLACK	AVAILABLE
2	MOLEX	160094-0001	12672852	01SP13	MX123 HRNS CONN ASSY 52 CKT	A	0	1458	BLACK	AVAILABLE
3	MOLEX	160094-0003	12672854	01SP13	MX123 HRNS CONN ASSY 52 CKT	C	0	2467	BLUE	AVAILABLE
4	MOLEX	160094-0013	12672853	01SP13	MX123 HRNS CONN ASSY 52 CKT	A	9	1458	BLACK	AVAILABLE
5	MOLEX	160094-0015	12672855	01SP13	MX123 HRNS CONN ASSY 52 CKT	C	9	2467	BLUE	AVAILABLE
6	MOLEX	34822-0013	12672856	01SP13	MX123 HRNS CONN ASSY 66 CKT	A	0	1458	BLACK	AVAILABLE
7	MOLEX	34822-0033	12672858	01SP13	MX123 HRNS CONN ASSY 66 CKT	C	0	2467	BLUE	AVAILABLE
8	MOLEX	34822-0023	12672857	01SP13	MX123 HRNS CONN ASSY 66 CKT	A	9	1458	BLACK	AVAILABLE
9	MOLEX	34822-0043	12672859	01SP13	MX123 HRNS CONN ASSY 66 CKT	C	9	2467	BLUE	AVAILABLE
10	MOLEX	34566-0103	12672860	11JN04	MX123 HRNS CONN ASSY 73 CKT	A	0	1458	BLACK	AVAILABLE
11	MOLEX	34566-0203	12672862	11JN04	MX123 HRNS CONN ASSY 73 CKT	B	0	1468	ST GRAY	AVAILABLE
12	MOLEX	34566-0303	12672864	09AP08	MX123 HRNS CONN ASSY 73 CKT	C	0	2467	BLUE	AVAILABLE
13	MOLEX	34566-0603	12672866	05DC14	MX123 HRNS CONN ASSY 73 CKT	F	0	1357	NATURAL	AVAILABLE
14	MOLEX	34566-1303	12672861	11JN04	MX123 HRNS CONN ASSY 73 CKT	A	9	1458	BLACK	AVAILABLE
15	MOLEX	34566-1403	12672863	11JN04	MX123 HRNS CONN ASSY 73 CKT	B	9	1468	ST GRAY	AVAILABLE
16	MOLEX	34566-1503	12672865	09AP08	MX123 HRNS CONN ASSY 73 CKT	C	9	2467	BLUE	AVAILABLE
17	MOLEX	34566-1803	12672867	05DC14	MX123 HRNS CONN ASSY 73 CKT	F	9	1357	NATURAL	AVAILABLE
18	MOLEX	34566-0703	12672872	09AP08	MX123 HRNS CONN ASSY 80 CKT	G	0	1358	BLUE	AVAILABLE
19	MOLEX	34566-0803	12672870	11JN04	MX123 HRNS CONN ASSY 80 CKT	H	0	2458	ST GRAY	AVAILABLE
20	MOLEX	34566-0903	12672868	T.B.D	MX123 HRNS CONN ASSY 80 CKT	J	0	2457	BLACK	NOT ACTIVE
21	MOLEX	34566-1903	12672873	09AP08	MX123 HRNS CONN ASSY 80 CKT	G	9	1358	BLUE	AVAILABLE
22	MOLEX	34566-2003	12672871	11JN04	MX123 HRNS CONN ASSY 80 CKT	H	9	2458	ST GRAY	AVAILABLE
23	MOLEX	34566-2103	12672869	T.B.D	MX123 HRNS CONN ASSY 80 CKT	J	9	2457	BLACK	NOT ACTIVE
24	MOLEX	34736-0028	12672851	01AU10	MX64 RCPT TERM Ag 0.5mm/0.75mm ISO GAGE B (RIGHT PAYOFF)	N/A	N/A	N/A	N/A	AVAILABLE
25	MOLEX	34736-0026	12672850	01AU10	MX64 RCPT TERM Ag 0.35mm ISO GAGE B (RIGHT PAYOFF)	N/A	N/A	N/A	N/A	AVAILABLE
26	MOLEX	34586-0001	12674820	11JN04	MX123 0.64mm GROMMET PLUG	N/A	N/A	N/A	NATURAL	AVAILABLE
27	YAZAKI	7116-4150-02	12588066	02JN03	2.8mm YESC SEALED FEMALE TERMINAL TIN 0.35mm2-0.50mm2	N/A	N/A	N/A	N/A	NOT ACTIVE
28	YAZAKI	7116-4151-02	12588067	02JN03	2.8mm YESC SEALED FEMALE TERMINAL TIN 0.75mm2-1.0mm2	N/A	N/A	N/A	N/A	NOT ACTIVE
29	YAZAKI	7116-4152-02	12582685	02JN03	2.8mm YESC SEALED FEMALE TERMINAL TIN 1.5mm2-2.5mm2	N/A	N/A	N/A	N/A	AVAILABLE
30	YAZAKI	7158-3111-60	12588068	02JN03	2.8mm CABLE SEAL (wire O.D. range 1.2mm-1.9mm)	N/A	N/A	N/A	GREEN	NOT ACTIVE
31	YAZAKI	7158-3112-70	12588069	02JN03	2.8mm CABLE SEAL (wire O.D. range 1.8mm-2.3mm)	N/A	N/A	N/A	YELLOW	NOT ACTIVE
32	YAZAKI	7158-3113-40	12582686	02JN03	2.8mm CABLE SEAL (wire O.D. range 2.1mm-3.0mm)	N/A	N/A	N/A	WHITE	AVAILABLE
33	YAZAKI	7158-3114-90	12674821	02JN03	2.8mm YESC CAVITY PLUG	N/A	N/A	N/A	BLUE	AVAILABLE
34	MOLEX	63825-8400	N/A	02JN03	MX64 TERM HAND CRIMP TOOL	N/A	N/A	N/A	N/A	AVAILABLE
35	MOLEX	63813-1400	XX019826	02JN03	MX64 TERM SERVICE TOOL	N/A	N/A	N/A	N/A	AVAILABLE
36	MOLEX	63902-5300	N/A	02JN03	MX64 CRIMP APPLICATOR with TOOL KIT 0.5/0.75mm2 PAYOFF DIRECTION D (left payoff) (contact Molex for payoff detail)	N/A	N/A	N/A	N/A	AVAILABLE
37	MOLEX	63902-5370	N/A	02JN03	MX64 APPLICATOR TOOL KIT 0.5/0.75mm2	N/A	N/A	N/A	N/A	AVAILABLE
38	MOLEX	63902-5100	N/A	02JN03	MX64 CRIMP APPLICATOR with TOOL KIT 0.35mm2 PAYOFF DIRECTION D (left payoff) (contact Molex for payoff detail)	N/A	N/A	N/A	N/A	AVAILABLE
39	MOLEX	63902-5170	N/A	02JN03	MX64 APPLICATOR TOOL KIT 0.35mm2	N/A	N/A	N/A	N/A	AVAILABLE
40	SPX	J35616-64	T.B.D.	02JN03	0.64mm PROBE TOOL (for rcpt)	N/A	N/A	N/A	N/A	AVAILABLE
41	SPX	J35616-64A	T.B.D.	02JN03	0.64mm PROBE TOOL WITH EXT (for rcpt)	N/A	N/A	N/A	N/A	AVAILABLE
42	SPX	J35616-65	T.B.D.	02JN03	0.64mm PROBE TOOL WITH EXT (for pin)	N/A	N/A	N/A	N/A	AVAILABLE
43	SPX	J35616-4A	T.B.D.	02JN03	2.8mm PROBE TOOL (for rcpt)	N/A	N/A	N/A	N/A	AVAILABLE
44	YAZAKI	X39899-J374	12094430	02JN03	2.8mm TERM SERVICE TOOL	N/A	N/A	N/A	N/A	AVAILABLE
45	TQI	7000-1006	N/A	15JN15	52 CKT PASS THROUGH ADAPTERS	N/A	N/A	N/A	BLACK	AVAILABLE
46	TQI	7000-1002	N/A	15JN15	66 CKT PASS THROUGH ADAPTERS	N/A	N/A	N/A	BLACK	AVAILABLE
47	TQI	79917-0061	N/A	15JN15	73 CKT PASS THROUGH ADAPTERS	N/A	N/A	N/A	BLACK	AVAILABLE
48	TQI	79917-0066	N/A	15JN15	80 CKT PASS THROUGH ADAPTERS	N/A	N/A	N/A	BLACK	AVAILABLE

* - MX123 DRESS COVER 52/66/73/80 CKT MATES TO ANY MX123 HARN CONN ASSY SHOWN ON TABLE ABOVE

NOTES: UNLESS OTHERWISE SPECIFIED

1. MATERIAL FOR INTERFACE:

A. RESIN:
   1. 30% G.F. PBT; 20% MAX. (BY WEIGHT) REGRIND.
   2. MATING CONNECTOR INTERFACE PART COLOR MUST BE SAME AS MATCHING KEYED HARNESS CONNECTOR ASSEMBLY.
   3. MUST BE VALIDATED FOR INDIVIDUAL DEVICE APPLICATION REQUIREMENTS.

B. 0.64MM PINS:
   1. BASE MATERIAL: COPPER ALLOY; CONDUCTIVITY >= 28% IACS AT 20°C; TENSILE STRENGTH >= 635 N/mm²;SURFACE ROUGHNESS R_a 6 MAX.
   2. PLATING FINISH: SILVER (Ag). PLATING TO BE 1.9-3.3 um ELECTRODEPOSITED SEMI-BRIGHT SILVER OVER 1.25-2.25 um DUCTILE SULPHAMATE NICKEL PER NOTE 1(D).
   3. ANTI-TARNISH: SYNTHETIC HYDROCARBON CONTACT SURFACE FINISH OR EQUIVALENT APPLIED WITHOUT VOID TO CONTACT AREA (MIN 3.7mm FROM PIN TIP).

C. 2.8MM BLADE:
   1. BASE MATERIAL: COPPER ALLOY; CONDUCTIVITY>= 28% IACS AT 20°C; TENSILE STRENGTH >= 350 N/mm²; SURFACE ROUGHNESS R_a 6 MAX.
   2. PLATING FINISH: TIN. PLATING TO BE 2.5-5.0 um ELECTRODEPOSITED TIN, MATTE FINISH OVER 1.25-2.5um DUCTILE SULPHAMATE NICKEL PER NOTE 1(D).

D. PLATING REQUIREMENTS:

   1. SILVER PLATING
      a. 99.5% PURE SEMI-BRIGHT WITH NO ORGANIC BRIGHTNERS OR CHROMATES.

   2. NICKEL PLATING
      a. ELECTRODEPOSITED DUCTILE SULFAMATE NICKEL WITH A NON-BRIGHTENED FINISH. NO ORGANIC OR BRIGHTENING AGENTS SHALL BE ALLOWED.
      b. SHALL ONLY BE USED AS AN UNDERLYING PLATING AND MAY NOT BE USED AS AN ELECTRICAL CONTACT SURFACE PLATING.
      c. SHALL BE NODULE FREE WHEN VIEWED AT 10X MAGNIFICATION IN MEASURED IN CONTACT SURFACE AREA PLUS 0.5MM PERIMETER AROUND THE CONTACT SURFACE AREA.
      d. ALL PLATINGS SHALL HAVE A 1.0% MAXIMUM BY WEIGHT IMPURITIES. IMPURITIES ARE DEFINED AS ALL ELEMENTS NOT THE PRIMARY PLATING OR HARDENING AGENT IF APPLICABLE, AS DETERMINED BY WET CHEMICAL ANALYSIS OR AUGER METHOD. NO SINGLE IMPURITY SHALL EXCEED 0.1% MAXIMUM BY WEIGHT.

   3. TESTING
      a. THICKNESS TO BE MEASURED IN CONTACT SURFACE AREA PLUS 0.5MM PERIMETER AROUND THE CONTACT SURFACE AREA AS DESIGNATED IN THE DRAWING. THICKNESS SHALL BE DETERMINED BY METHOD OF X-RAY (XRF).
      b. PLATING ADHESION SHALL BE TESTED BY A BEND TEST FOR ALL METALS. THE TEST SAMPLE SHALL BE BENT 90 DEGREES TO DETERMINE DEPOSIT ADHESION. TESTING SHALL BE COMPLETED IN ACCORDANCE WITH ASTM SPEC B571.

2. DESIGN - GENERAL:

   A. THIS IS A 100% CAD GENERATED PART. THE CAD MATHEMATICAL DATA IS THE MASTER FOR THIS PART. FOR DIMENSIONAL OR ANY INFORMATION NOT SHOWN ON THIS DRAWING, ANALYZE THE CAD MODEL.
   B. TOLERANCES:
      1. LINEAR 0.X ± 0.30
                 0.XX ± 0.10
                 0.XXX ± 0.10
      2. ANGULAR X° ± 3°
      3. ⌓ | 1.0 | A | B | C
   C. MINIMUM WALL THICKNESS REQUIRED: 1.3mm.
   D. CORNERS SHOWN AS SHARP TO BE R 0.2 MAX.
   E. LETTERING SHALL BE 0.15 MAX RAISED IN 0.20 MAX RECESS PAD. THIS INCLUDES MATERIAL CODE, RECYCLING CODE, CAVITY ID AND DATE CODE.
   F-1. PARTS MUST BE FREE OF DISCOLORATION, SALT RESIDUE AND OTHER IMPERFECTIONS THAT AFFECT FIT OR FUNCTION.
   F-2. SCRATCHES OR DENTS NOT TO EXCEED 0.013mm IN DEPTH.
   G. FOLLOWING PRODUCTION CODES TO BE PERMANENTLY MARKED & HUMAN READABLE TO A LETTER HEIGHT OF 1.5 ±0.5MM X 0.3 MAX DEEP
      1. MATERIAL #: XXXXX-XXXX
      2. DATE CODE: JJJY (JULIAN DAY, LAST DIGIT OF YEAR)
      3. INSPECTION MACHINE CODE + SERIAL #: X_XXXXX

3. DESIGN - MANUFACTURING:

   A. DRAFT TO BE WITHIN TOLERANCE.
   B. ALLOWABLE FLASH MAX 0.2 HIGH X MAX 0.13 THICK.
   C. ALLOWABLE PARTING LINE MISMATCH 0.2 MAX.
   D. EJECTOR PINS MARK TO BE FLUSH TO 0.25 MAX DEPRESSED.
   E. ALLOWABLE GATE VESTIGE FLUSH TO 0.25 MAX PROTRUSION.
   F. NO EXTERNAL MOLD RELEASE AGENT ALLOWED DURING MANUFACTURING.
   G. STEEL THAT FORMS THE INDICATED SURFACE MUST BE POLISHED WITH A DIAMOND FINISH (SPI A-2) OVER THE FULL PERIPHERY OF THE TOOL. SURFACE MUST HAVE NO MISMATCH.
   H. ANY PROCESS LUBRICANT REMAINING ON THE TERMINAL MUST NOT VARNISH OR DEGRADE IT'S ELECTRICAL PERFORMANCE UP TO A MAXIMUM CLASS AMBIENT TEMPERATURE PER SAE USCAR-2 FOR 1008 HOURS. PROCESS LUBRICANTS SHOULD BE APPROVED BY THE RESPONSIBLE ENGINEER.
   J. OPTIONAL FEATURES PROVIDED FOR AUTOMATION.
   K. PART MUST BE FREE FROM BURRS AND SHARP EDGES, WHICH MIGHT BE DETRIMENTAL TO SATISFACTORY ASSEMBLY, SAFE HANDLING OR FUNCTION OF PART.
   L. PARTS AS DELIVERED TO ASSEMBLY SHALL BE CLEAN AND FREE OF DEBRIS, RESIDUAL ABRASIVE MATERIAL AND CORROSION PRODUCTS ADVERESLY AFFECTING FUNCTION OR APPEARENCE.
   M. RESTRICTED AND REPORTABLE SUBSTANCES FOR PARTS PER GMW3059.

NOTES: UNLESS OTHERWISE SPECIFIED

4. SYSTEM REQUIREMENTS:

   A. HARNESS CONNECTOR IS COMPATIBLE WITH THE FOLLOWING ISO WIRE SIZE NO'S:
      0.35mm2, MEETING GMW15626 - MIN OD OF 1.30MM
      0.50mm2, MEETING GMW15626
      0.75mm2, MEETING GMW15626 - MAX OD OF 2.06MM

   B. CABLE TIE SPECIFICATIONS:
      1. CABLE TIE:
         TENSILE RATING: 220N / (50lbs) MIN
         TIE LENGTH: 186mm MIN
         TIE WIDTH: 4.75mm MAX
         MATERIAL: NYLON
      2. INSTALLATION:
         CABLE TIE TENSION: 190N MIN
      3. DRESSED WIRE BUNDLE PACKAGING: SEE FIG. 1

   C. WHEN MATED WITH COMPONENT CONNECTOR INTERFACE AND/OR DRESS COVER, HARNESS CONNECTOR SYSTEM CONFORMS TO THE FOLLOWING:
      1. SAE/USCAR-2, REV: 3 APRIL, 2001; CLASS 3
      2. FIELD CORRELATED LIFE TEST, SAE/USCAR-20, NOV. 2001
      3. GMW #3191 AUGUST 22, 2000 (DRAFT); TEMPERATURE CLASS 3, SEALING CLASS 1, VIBRATION CLASS 2
      4. RESTRICTED AND REPORTABLE CHEMICALS PER GMW #3059, REV: D AUGUST 2002
      5. TPA USER FORCES (FULLY POPULATED WITH TERMINALS)
         a. REMOVAL FROM LOCK TO PRE-SET: <=120N

   D. WIRE SPECIFICATIONS:
      1. WIRE SURFACE MUST BE FREE OF SCRATCHES, GROOVES OR DENTS WHERE FUNCTIONAL

5. TERMINAL CURRENT RATINGS:

   A. MX64 RCPT TERM
      ALL TESTING DONE IN ACCORDANCE WITH USCAR-2 REV5 SECTION 5.3

      1. MX64 RCPT TERM Ag 0.50/0.75mm2 CRIMPED TO 0.75mm2 ISO WIRE AND MATED TO MX123 0.64MM PIN: SEE TABLE BELOW
      2. MX64 RCPT TERM Ag 0.35mm2 CRIMPED TO 0.35mm2 ISO WIRE AND MATED TO MX123 0.64MM PIN: SEE TABLE BELOW

WIRE	CURRENT RATING			
	23'C	85'C	105'C	125'C
0.75mm2	11.3A	11.3A	9.5A	6.6A
0.50mm2	10.0A	10.0A	8.3A	5.7A
0.35mm2	8.5A	8.5A	7.1A	5.0A

   B. 2.8MM RCPT TERM
      ALL TESTING DONE IN ACCORDANCE WITH MOLEX DVP&R 0279 (TR # 7125)

      1. 2.8MM RCPT TERM TIN 2.0mm2 CRIMPED TO 2.0mm2 ISO WIRE AND MATED TO MX123 2.8MM BLADE: 25.6 AMPS AT 125°C

6. CONTACT MOLEX AUTOMOTIVE FOR AVAILABLE CUSTOM PATTERNS OF CAVITIES OPEN FOR CIRCUITS - SEE GM DRAWING 13507496

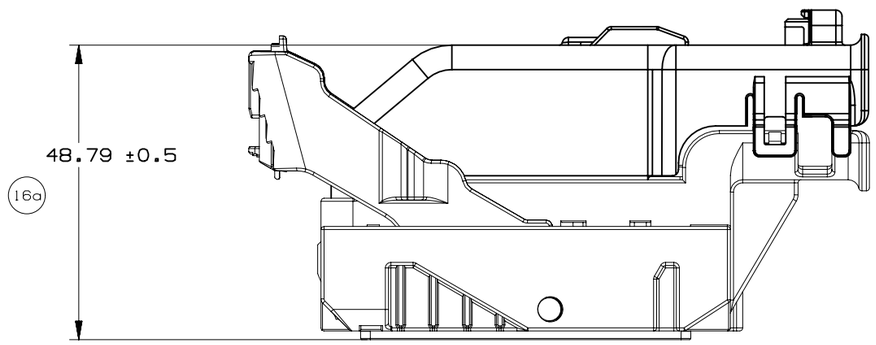

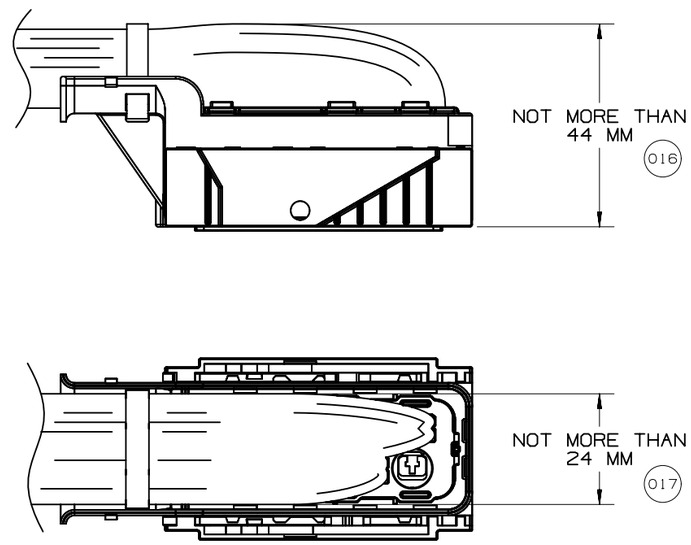

Fig. 1

GM	PAGE TITLE WIRE DRESS PACKAGING DIMENSIONS		DRAWING NUMBER 12672833	DWG STATUS			PAGE NUMBER
				ST	REV	PDI	
				R	001		8 OF 22

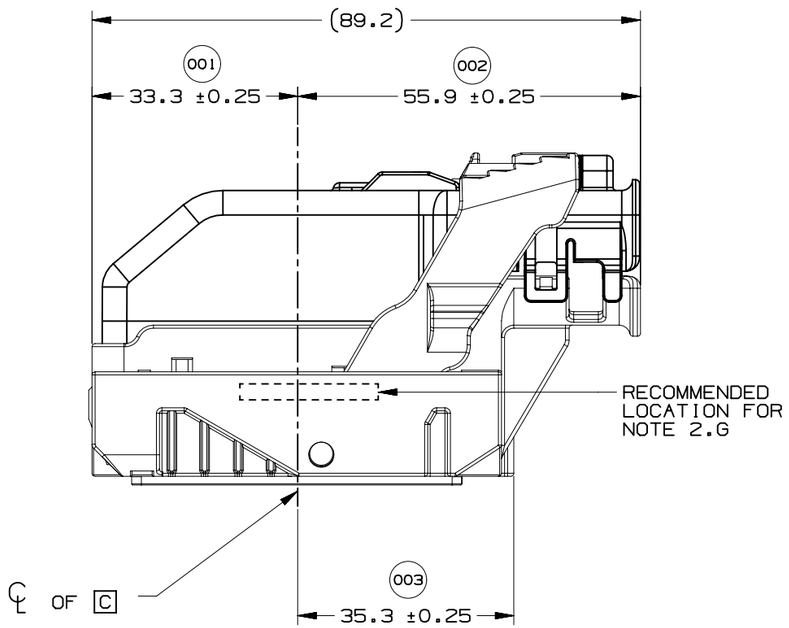

WIRE DRESS OPTION 0 SHOWN

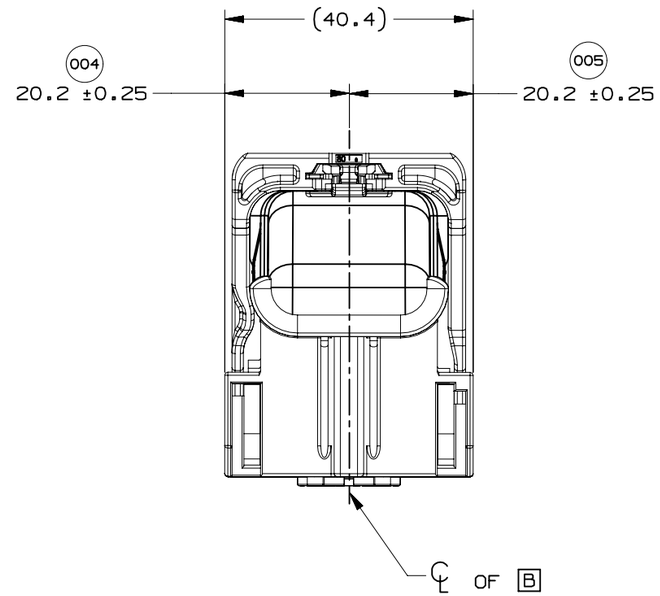

WIRE DRESS OPTION 0 SHOWN

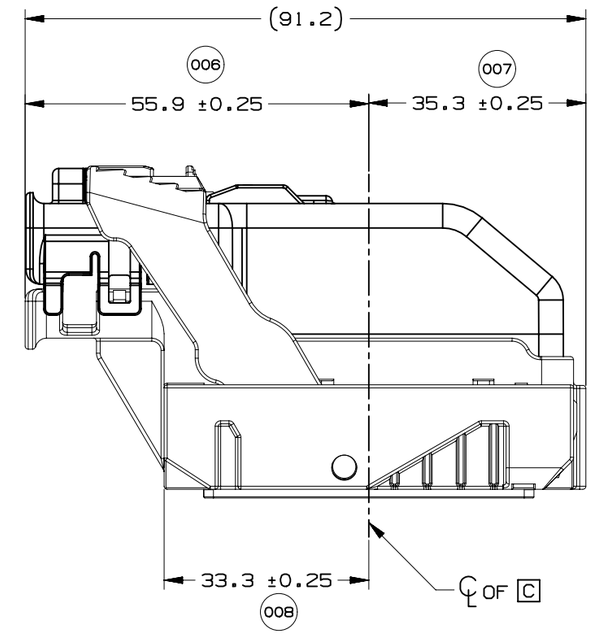

WIRE DRESS OPTION 9 SHOWN

GM	PAGE TITLE LOCATION AND PACKAGING DIMENSIONS REFERENCING INTERFACE DATUMS B & C		DRAWING NUMBER 12672833	DWG STATUS ST: R	REV: 001	PDI:	PAGE NUMBER 9 OF 22

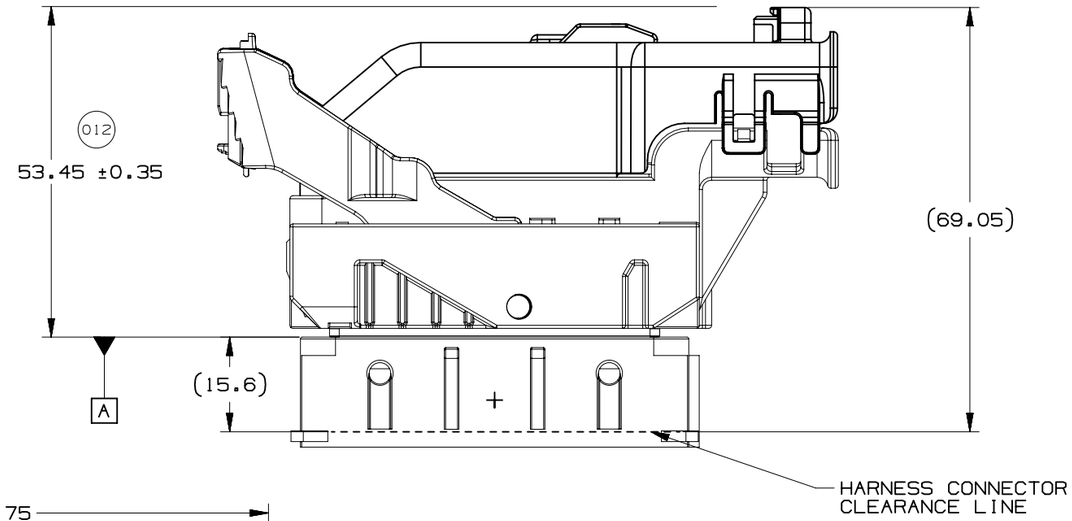

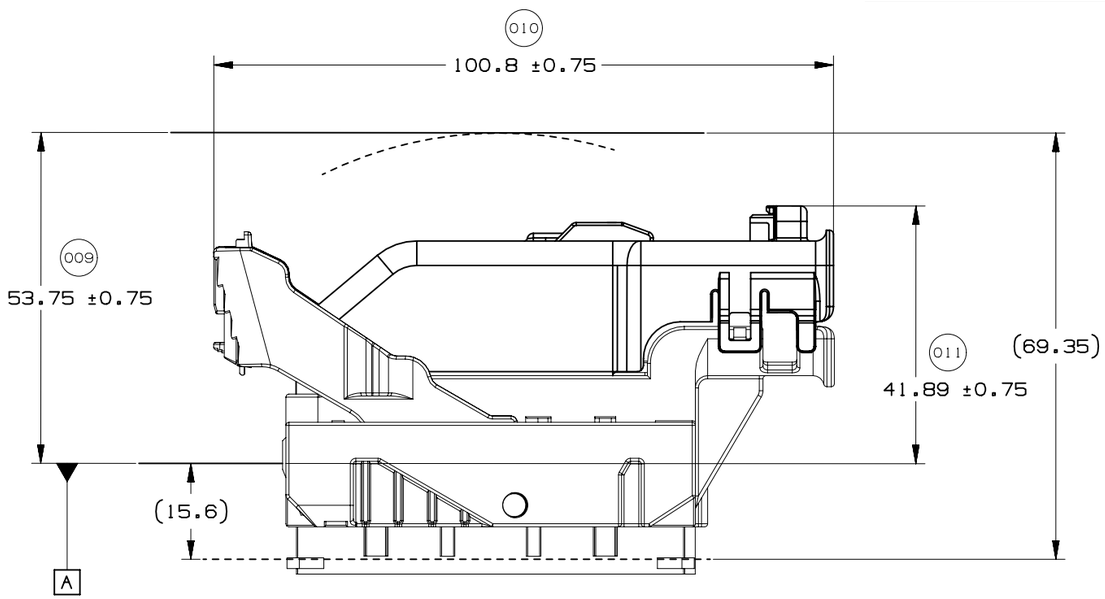

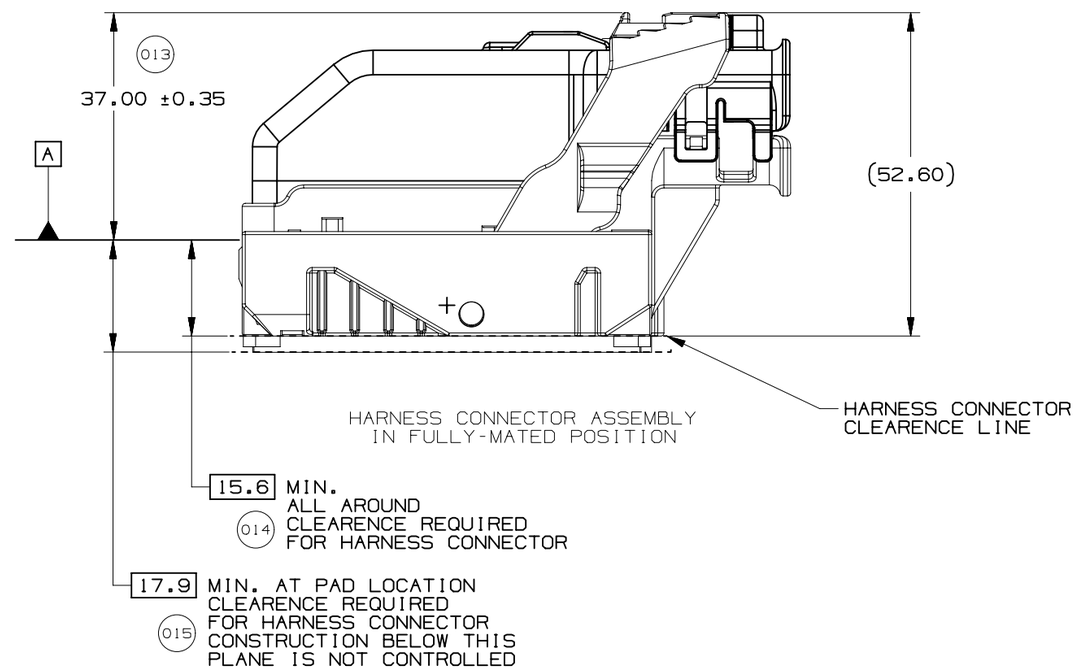

GM	PAGE TITLE LOCATION AND PACKAGING DIMENSIONS REFERENCING INTERFACE DATUM A		DRAWING NUMBER 12672833	DWG STATUS ST: R	REV: 001	PDI:	PAGE NUMBER 10 OF 22

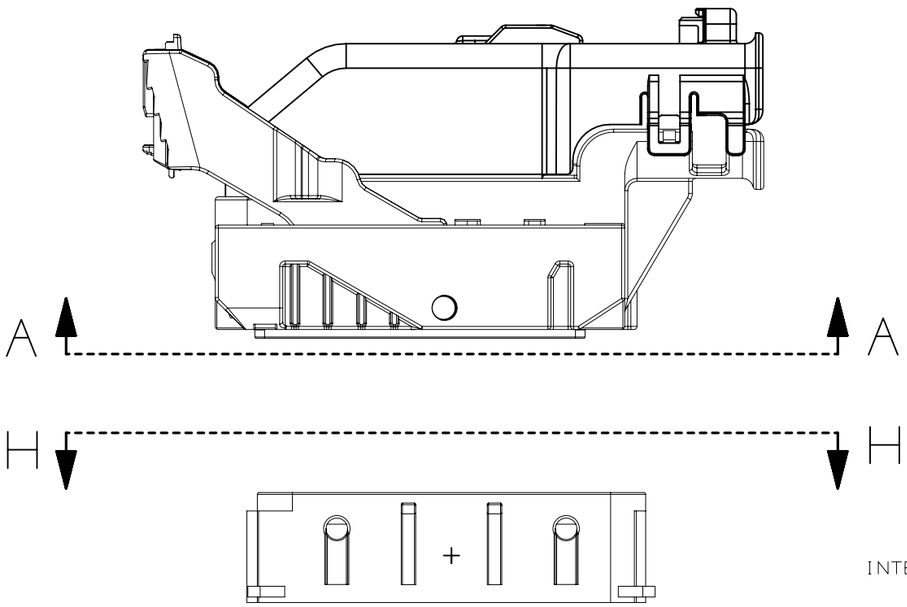

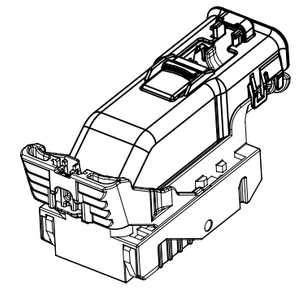

NOTE: REFERENCE THE COMPONENT TABLE
FOR KEY OPTIONS AND CONFIGURATIONS

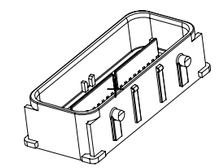

INTERFACE SIDE SHOWN ON ALL SECTION VIEWS

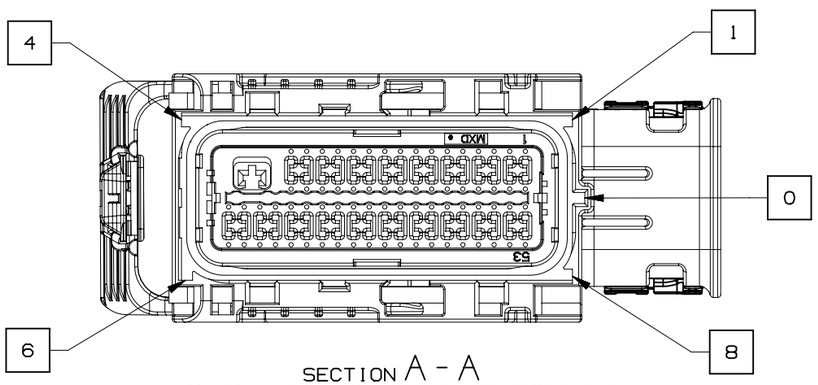

SECTION A - A
73 CKT HARNESS CONNECTOR ASSEMBLY
KEY OPTION B SHOWN

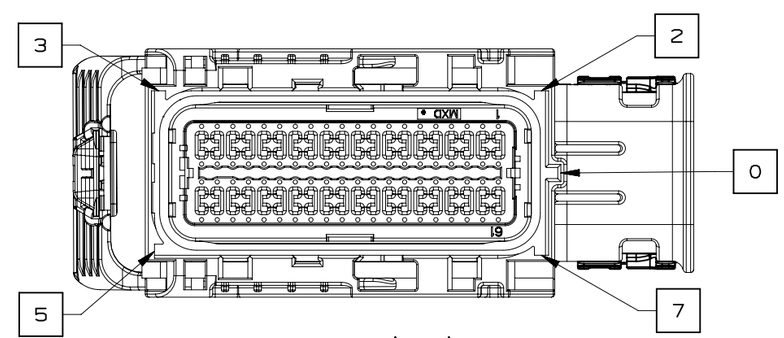

SECTION A - A
80 CKT HARNESS CONNECTOR ASSEMBLY
KEY OPTION K SHOWN

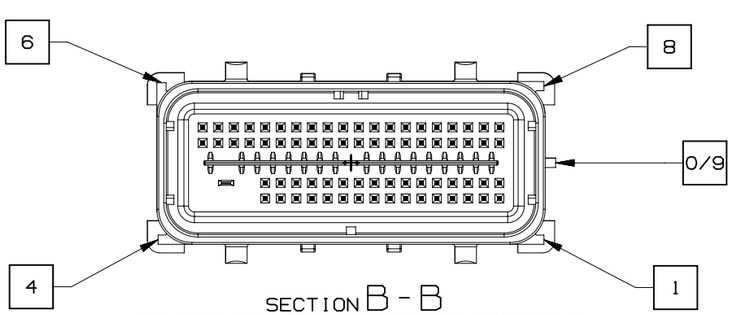

SECTION B - B
73 CKT HARNESS CONNECTOR ASSEMBLY
KEY OPTION B SHOWN

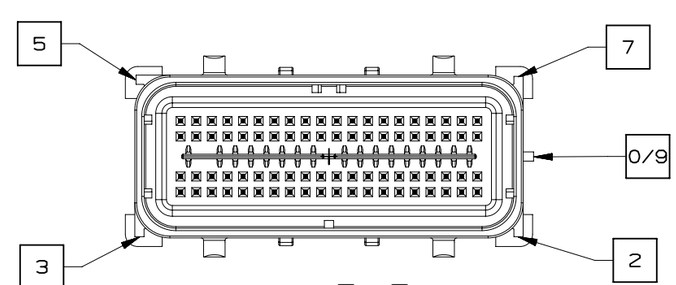

SECTION B - B
80 CKT HARNESS CONNECTOR ASSEMBLY
KEY OPTION K SHOWN

GM	PAGE TITLE KEY ID REF - WIRE DRESS OPTION 0		DRAWING NUMBER 12672833	DWG STATUS			PAGE NUMBER
				ST	REV	PDI	
				R	001		11 OF 22

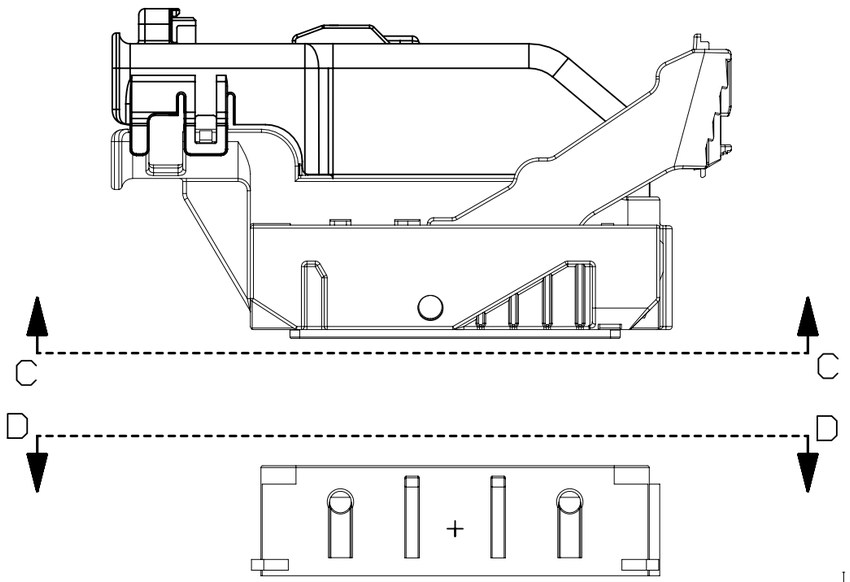

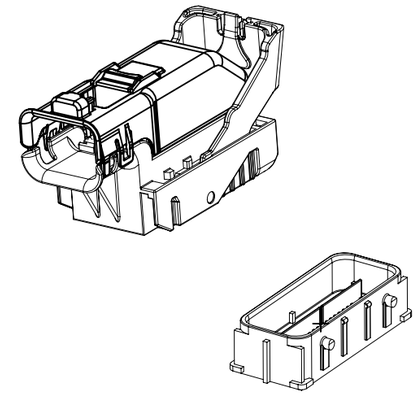

NOTE: REFERENCE THE COMPONENT TABLE
FOR KEY OPTIONS AND CONFIGURATIONS

INTERFACE SIDE SHOWN ON ALL SECTION VIEWS

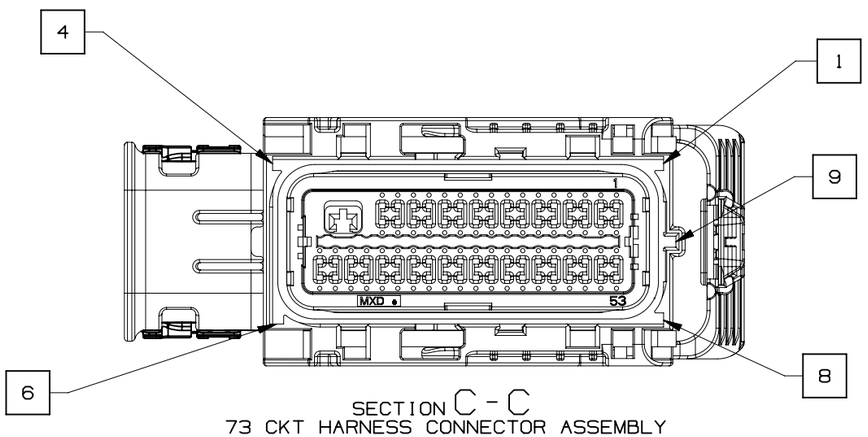

SECTION C - C
73 CKT HARNESS CONNECTOR ASSEMBLY
KEY OPTION B SHOWN

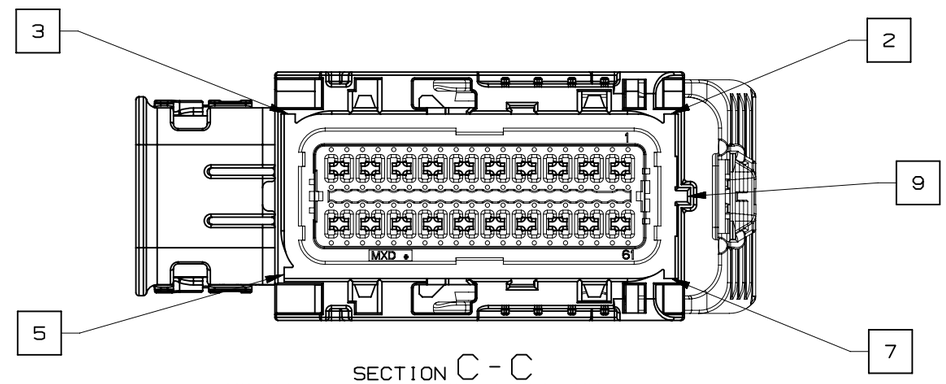

SECTION C - C
80 CKT HARNESS CONNECTOR ASSEMBLY
KEY OPTION K SHOWN

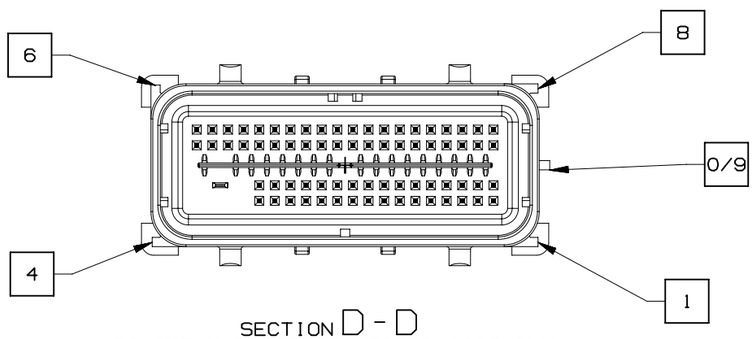

SECTION D - D
73 CKT HARNESS CONNECTOR ASSEMBLY
KEY OPTION B SHOWN

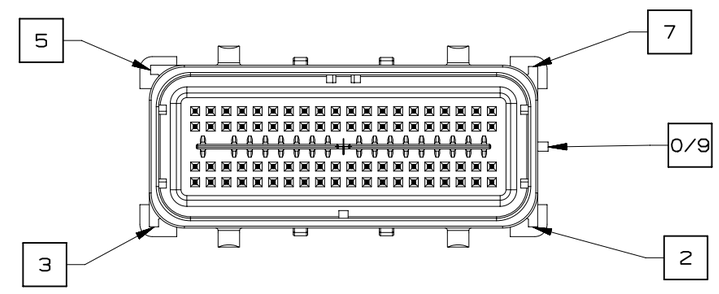

SECTION D - D
80 CKT HARNESS CONNECTOR ASSEMBLY
KEY OPTION K SHOWN

GM	PAGE TITLE KEY ID REF - WIRE DRESS OPTION 9		DRAWING NUMBER 12672833	DWG STATUS ST: R	REV: 001	PDI:	PAGE NUMBER 12 OF 22

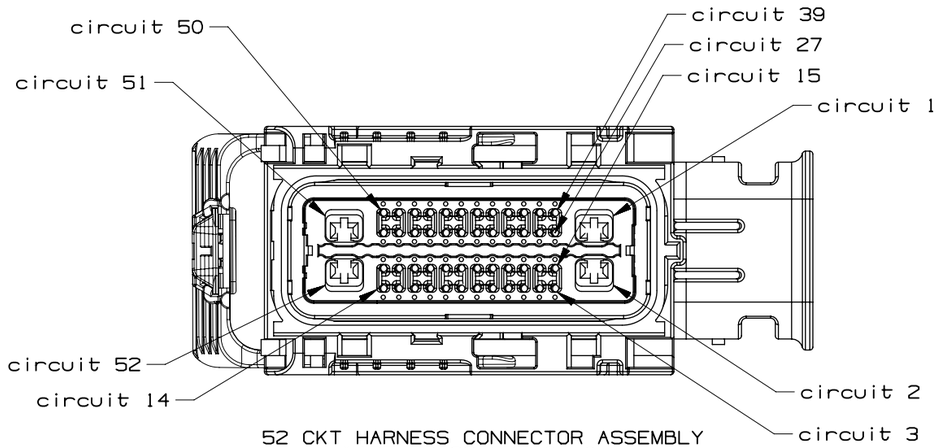

52 CKT HARNESS CONNECTOR ASSEMBLY
WIRE DRESS OPTION 0

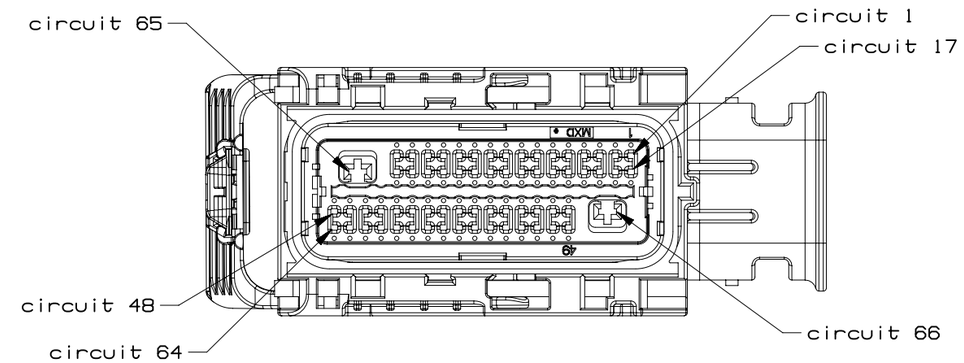

66 CKT HARNESS CONNECTOR ASSEMBLY
WIRE DRESS OPTION 0

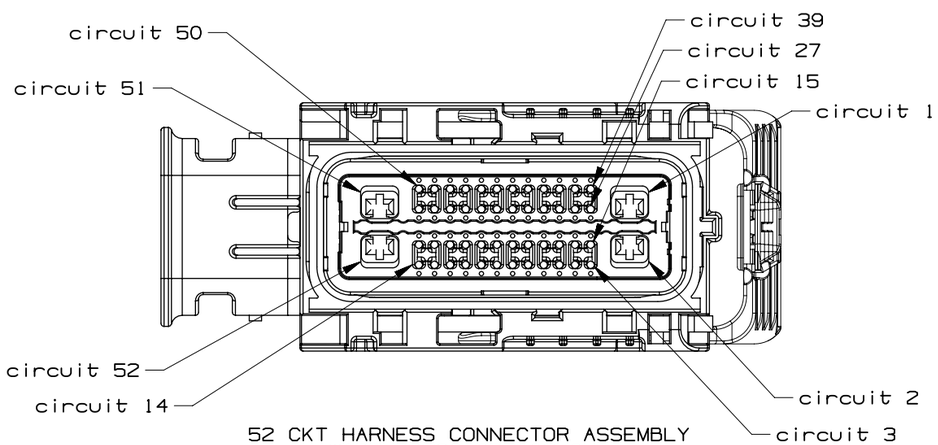

52 CKT HARNESS CONNECTOR ASSEMBLY
WIRE DRESS OPTION 9

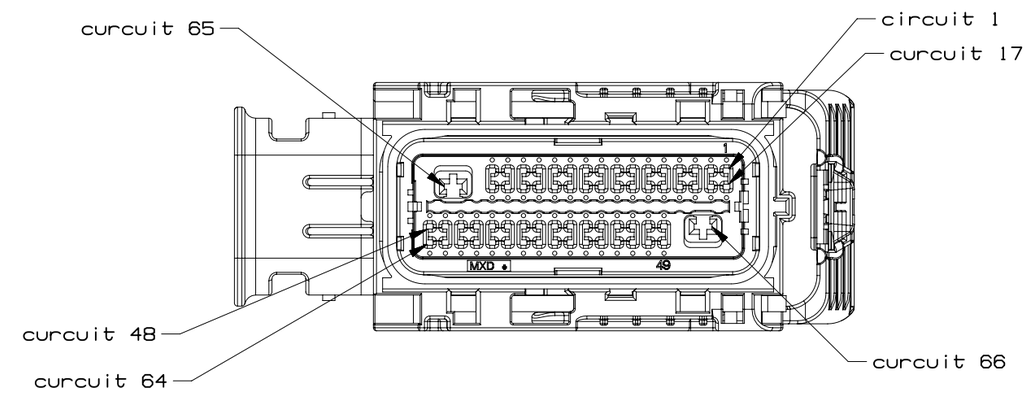

66 CKT HARNESS CONNECTOR ASSEMBLY
WIRE DRESS OPTION 9

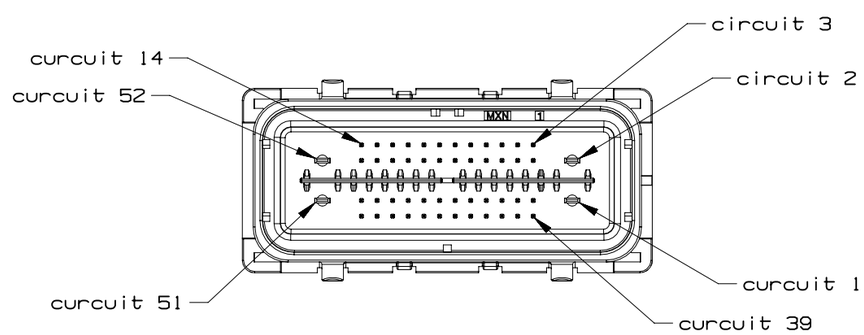

52 CKT COMPONENT CONNECTOR INTERFACE

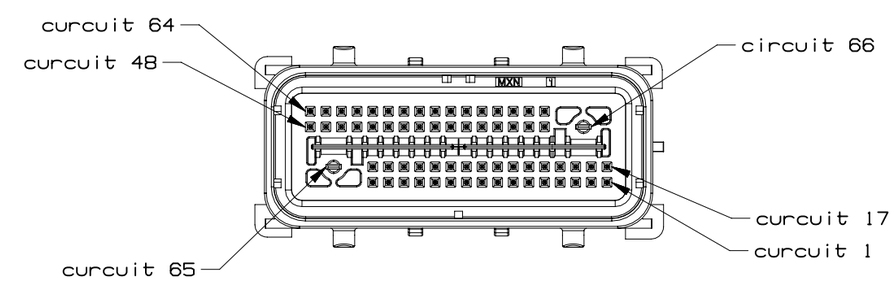

66 CKT COMPONENT CONNECTOR INTERFACE

	GM	PAGE TITLE CIRCUIT CONFIGURATIONS		DRAWING NUMBER 12672833	DWG STATUS ST: R	REV: 001	PDI:	PAGE NUMBER 13 OF 22

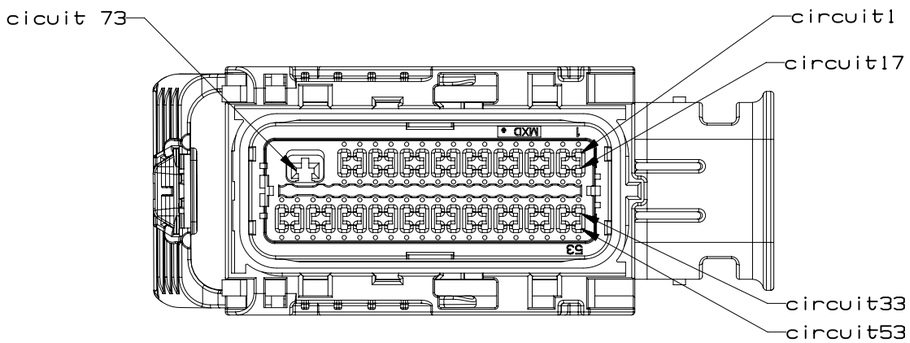

73 CKT HARNESS CONNECTOR ASSEMBLY
WIRE DRESS OPTION 0

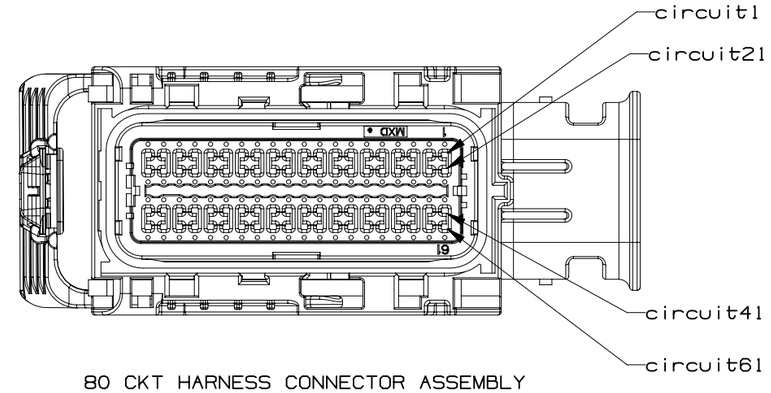

80 CKT HARNESS CONNECTOR ASSEMBLY
WIRE DRESS OPTION 0

INTERFACE SIDE SHOWN ON ALL VIEWS

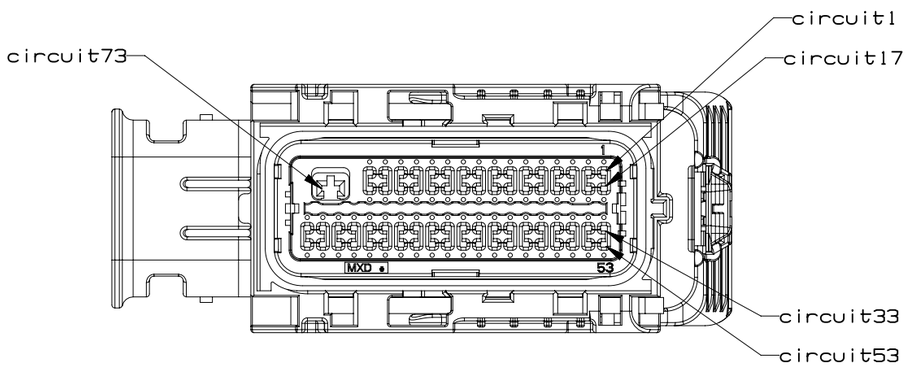

73 CKT HARNESS CONNECTOR ASSEMBLY
WIRE DRESS OPTION 9

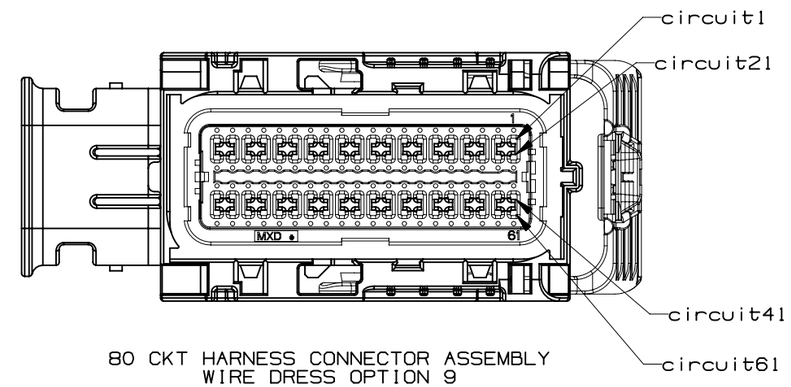

80 CKT HARNESS CONNECTOR ASSEMBLY
WIRE DRESS OPTION 9

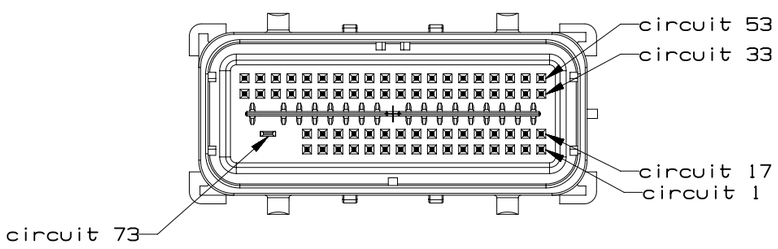

73 CKT COMPONENT CONNECTOR INTERFACE

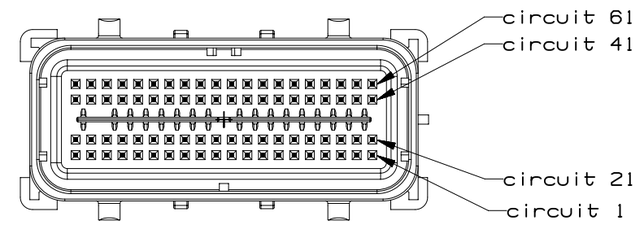

80 CKT COMPONENT CONNECTOR INTERFACE

GM	PAGE TITLE CIRCUIT CONFIGURATIONS		DRAWING NUMBER 12672833	DWG STATUS ST: R REV: 001 PDI:	PAGE NUMBER 14 OF 22	

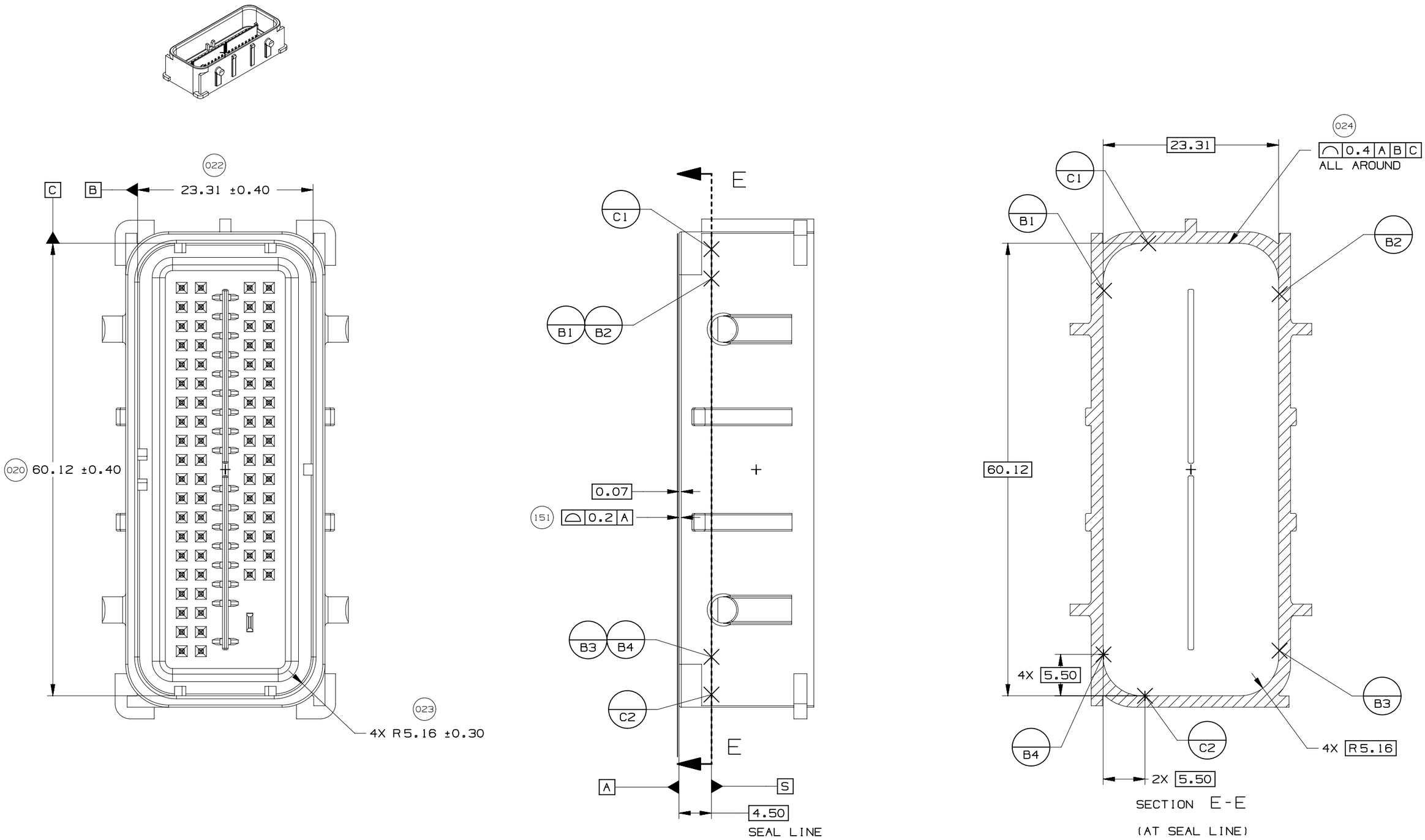

UNLESS SPECIFIED, TOLERANCE OF THE COMPONENT CONNECTOR INTERFACE TO BE 0.13 A B C

GM	PAGE TITLE COMPONENT CONNECTOR INTERFACE		DRAWING NUMBER 12672833	DWG STATUS ST: R	REV: 001	PDI:	PAGE NUMBER 15 OF 22

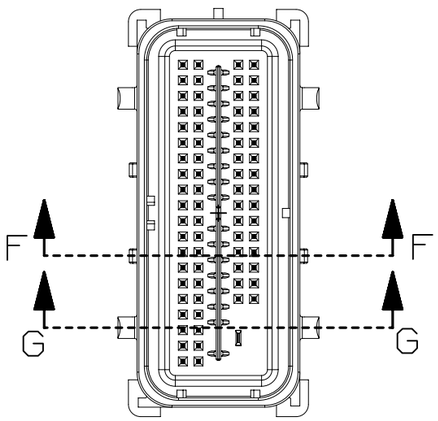

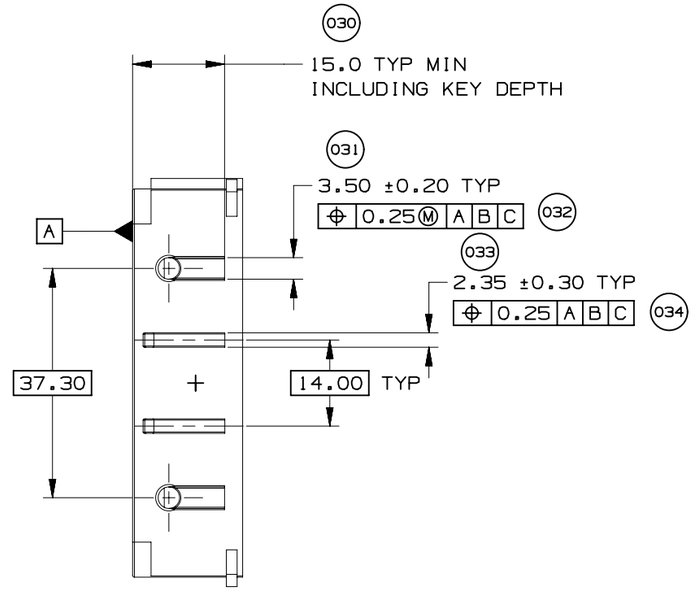

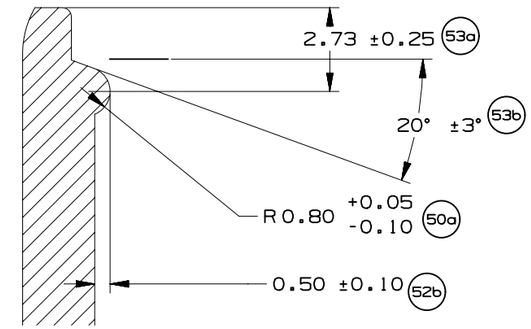

VIEW YY
SCALE 5:1

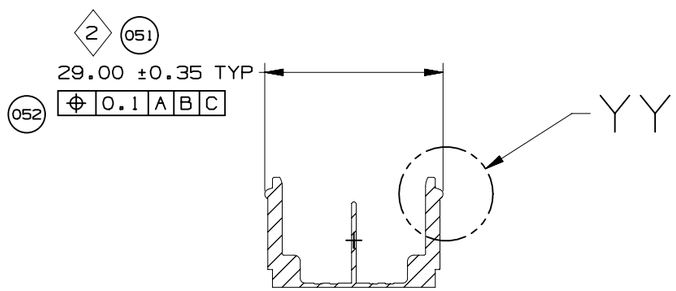

SECTION F-F
(RELEASE FEATURE)

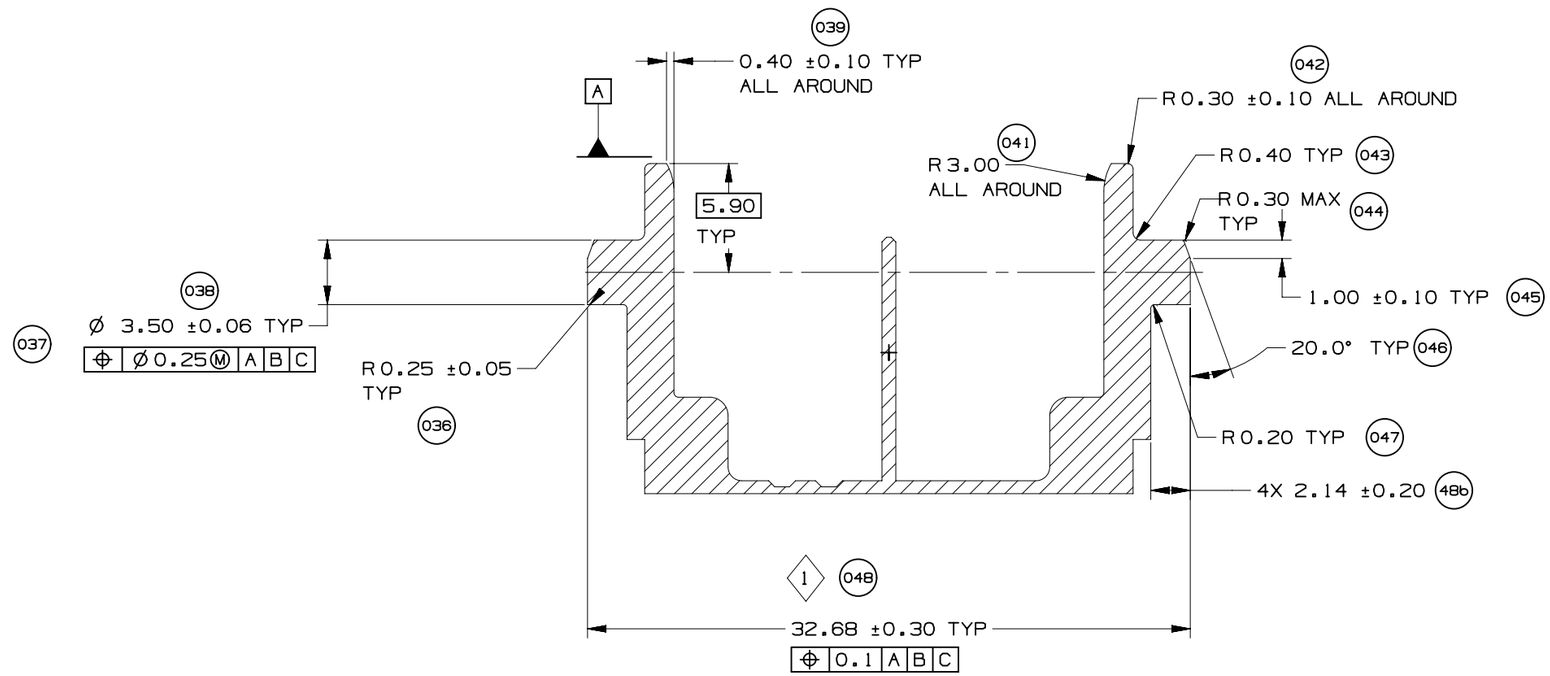

SECTION G-G
(CAM POST)

GM	PAGE TITLE COMPONENT CONNECTOR INTERFACE		DRAWING NUMBER 12672833	DWG STATUS			PAGE NUMBER
				ST	REV	PDI	
				R	001		16 OF 22

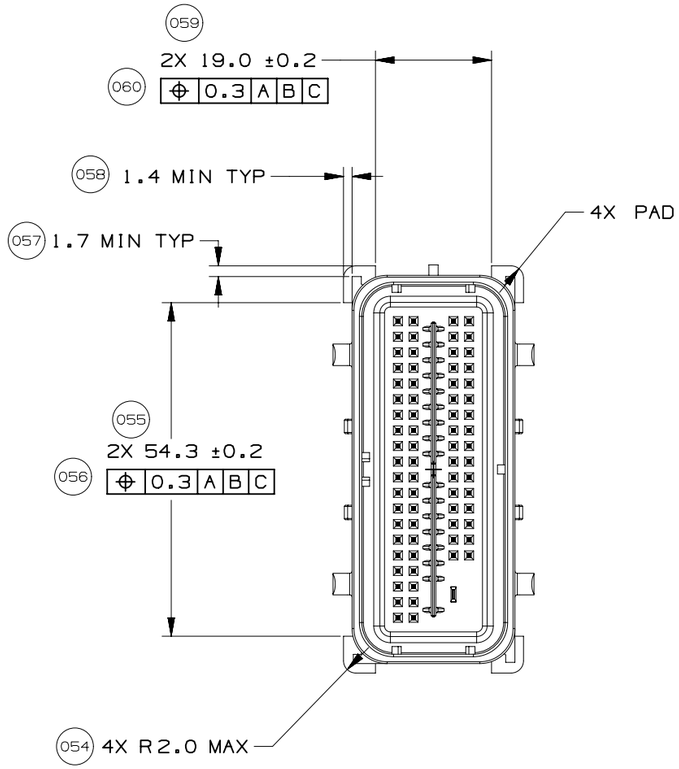

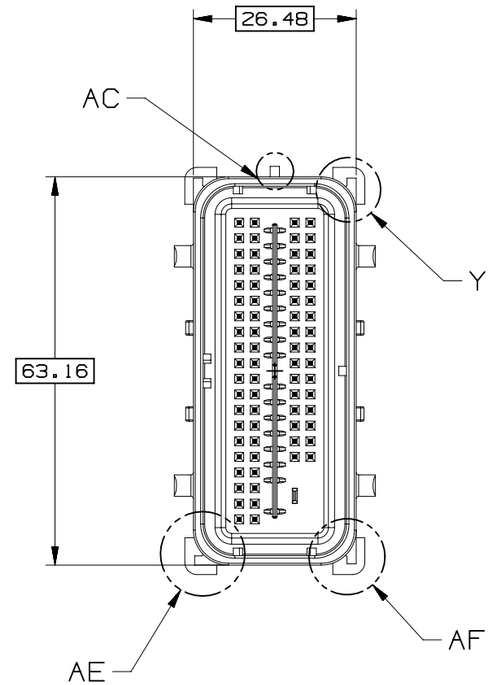

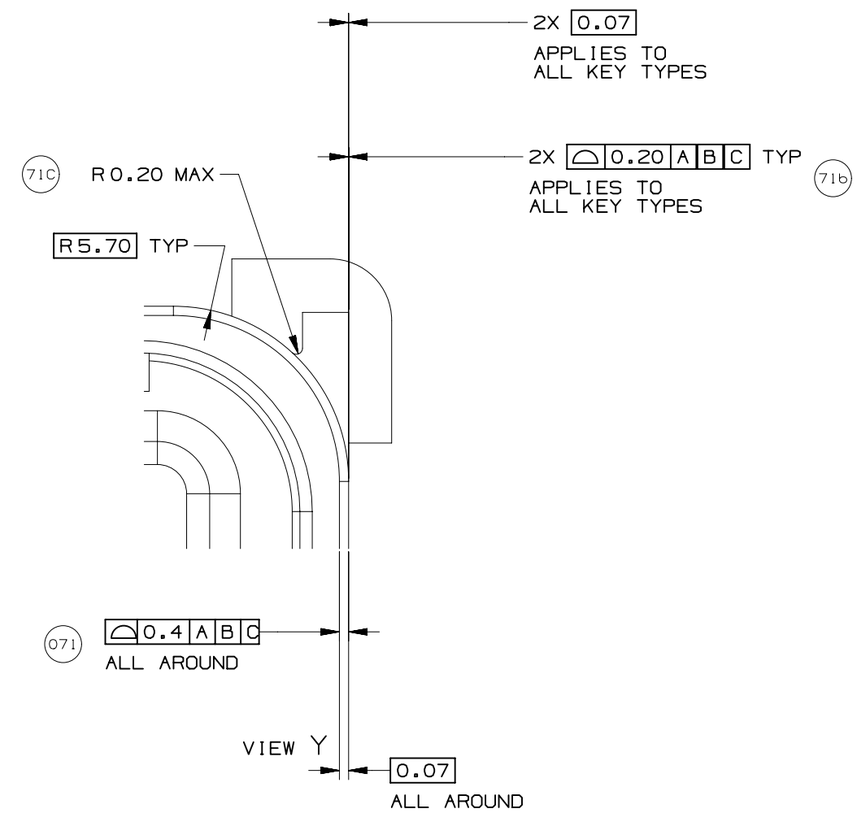

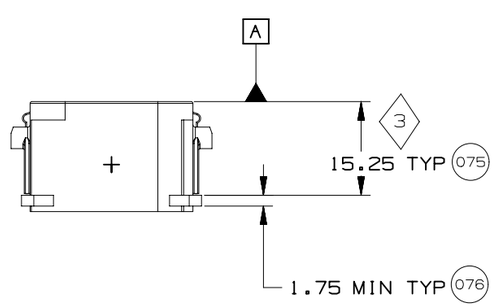

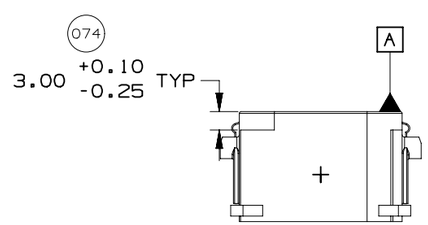

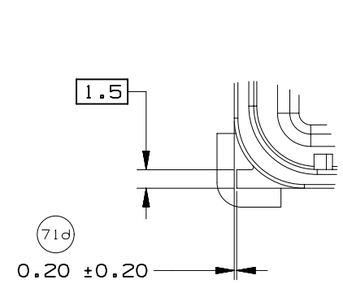

VIEW AE
KEY TYPE 2
SCALE 2:1

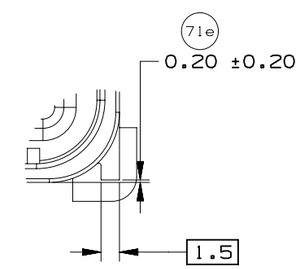

VIEW AF
KEY TYPE 1
SCALE 2:1

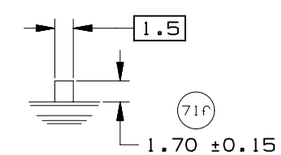

VIEW AC
KEY TYPE 3
SCALE 2:1

GM	PAGE TITLE COMPONENT CONNECTOR INTERFACE		DRAWING NUMBER 12672833	DWG STATUS ST: R REV: 001 PDI:	PAGE NUMBER 17 OF 22	

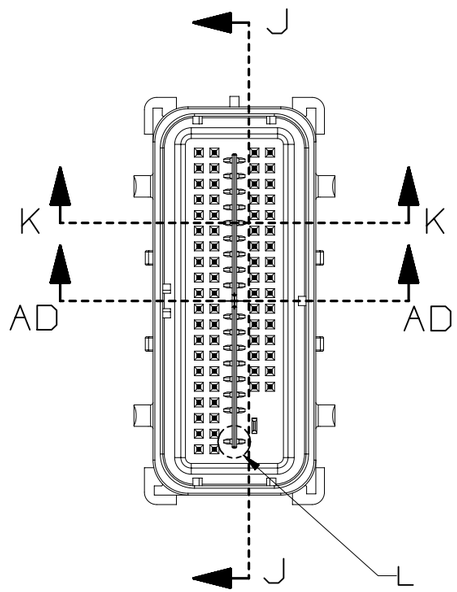

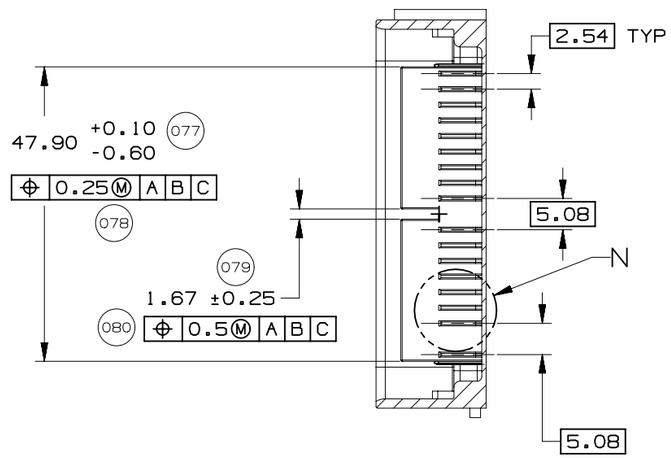

SECTION J-J

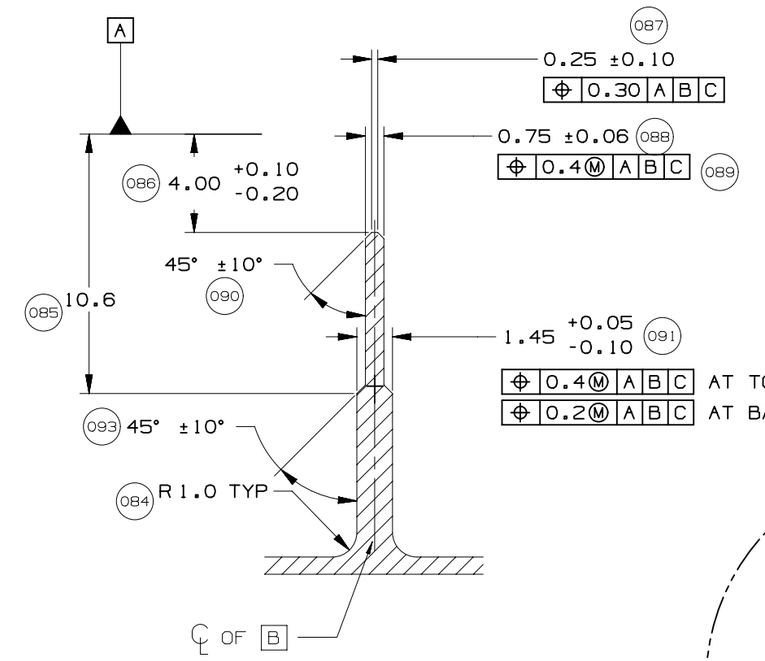

DETAIL M
TYPICAL
SCALE 4:1

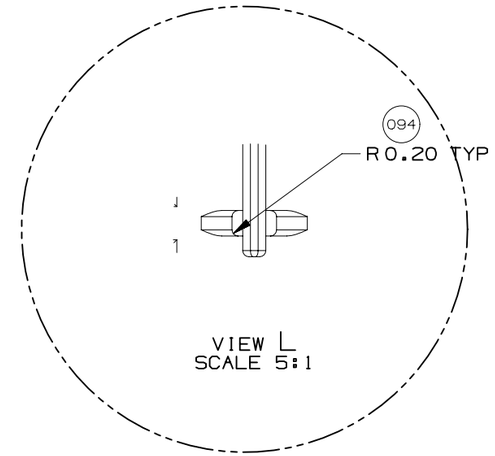

VIEW L
SCALE 5:1

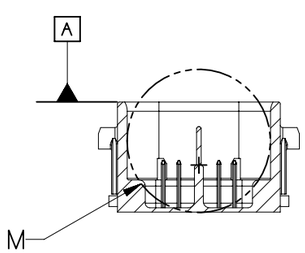

SECTION K-K

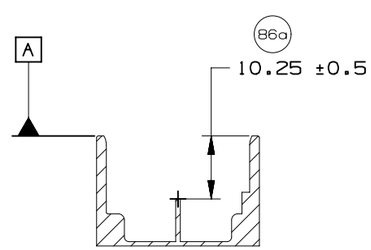

SECTION AD-AD

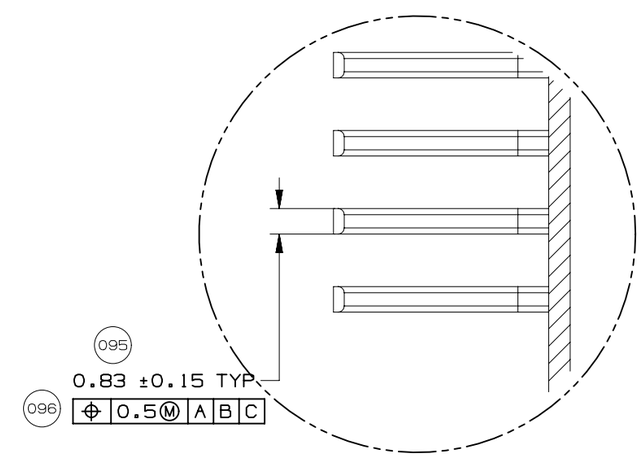

DETAIL N
SCALE 5:1

	GM	PAGE TITLE COMPONENT CONNECTOR INTERFACE		DRAWING NUMBER 12672833	DWG STATUS ST: R	REV: 001	PDI:	PAGE NUMBER 18 OF 22

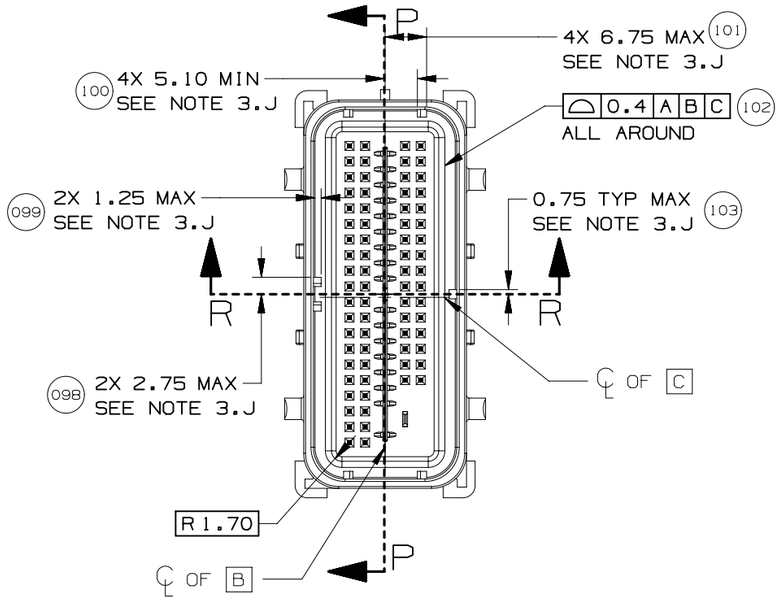

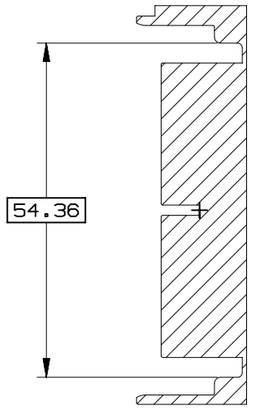

SECTION P-P

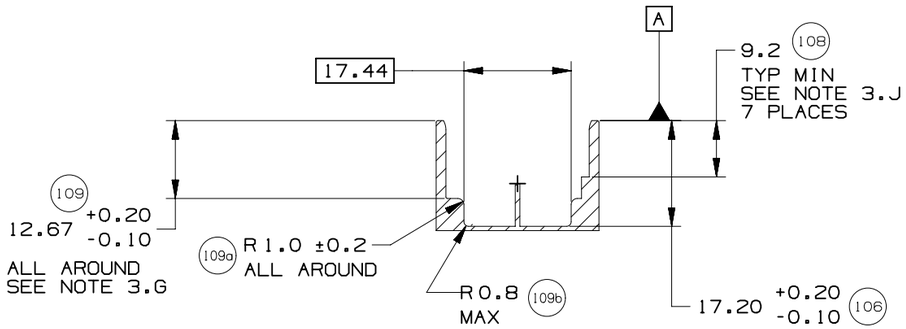

SECTION R-R

GM	PAGE TITLE COMPONENT CONNECTOR INTERFACE		DRAWING NUMBER 12672833	DWG STATUS			PAGE NUMBER
				ST	REV	PDI	
				R	001		19 OF 22

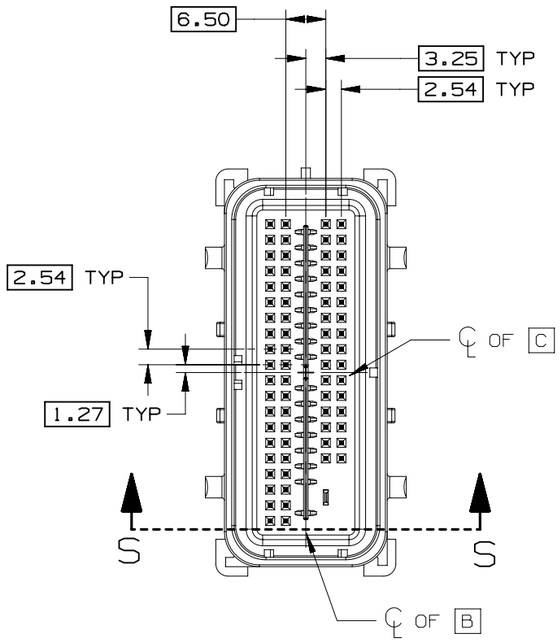

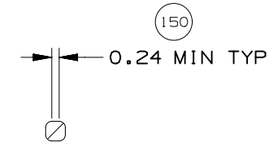

SECTION BB-BB

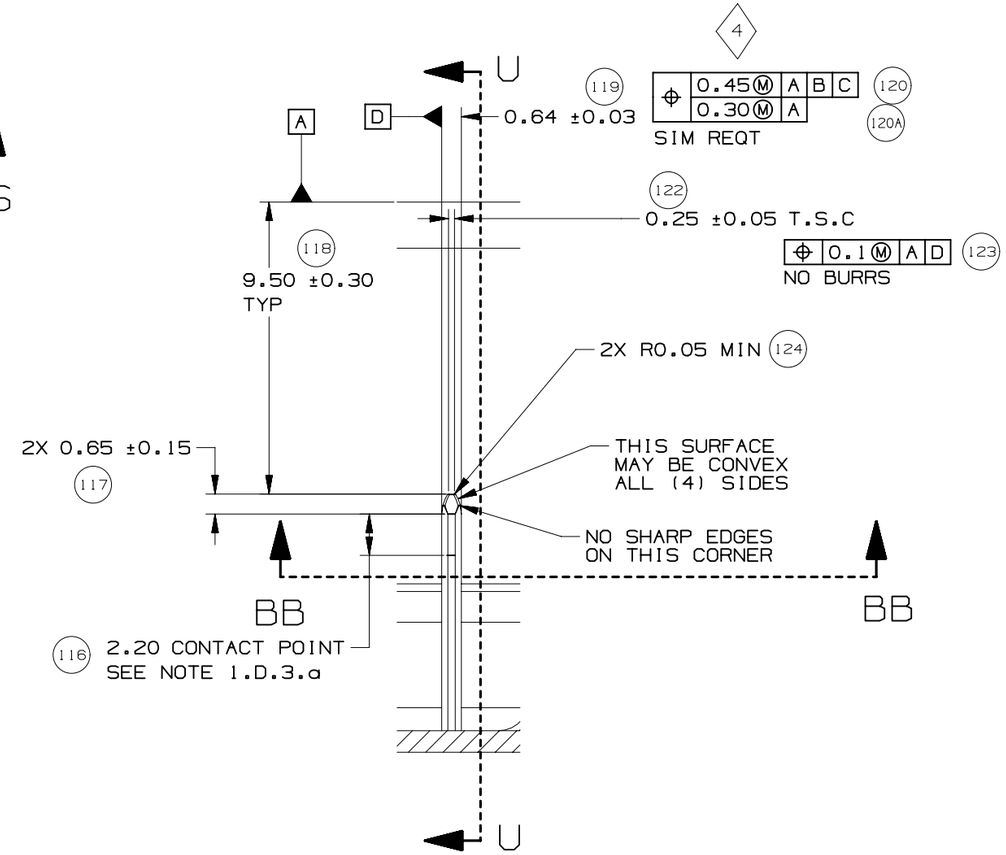

DETAIL T
TYPICAL
SCALE 5:1

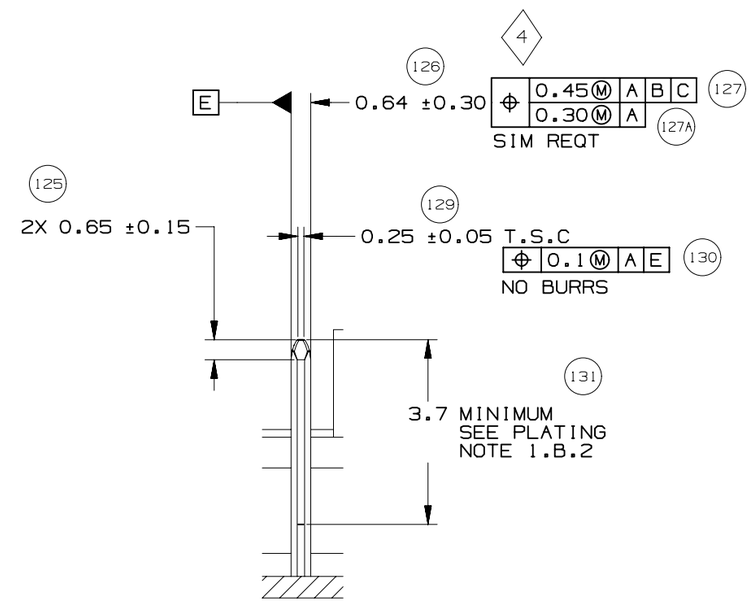

SECTION U-U
TYPICAL

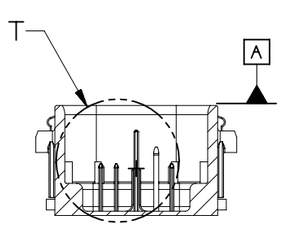

SECTION S-S

GM	PAGE TITLE COMPONENT CONNECTOR INTERFACE		DRAWING NUMBER 12672833	DWG STATUS ST: R REV: 001 PDI:	PAGE NUMBER 20 OF 22	

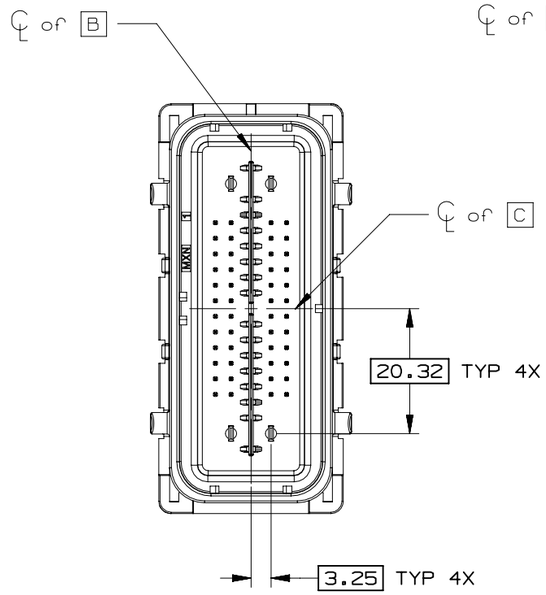

52 CKT COMPONENT
CONNECTOR INTERFACE

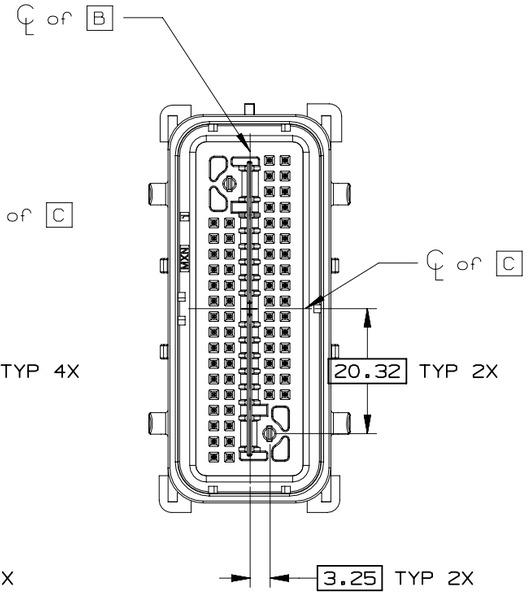

66 CKT COMPONENT
CONNECTOR INTERFACE

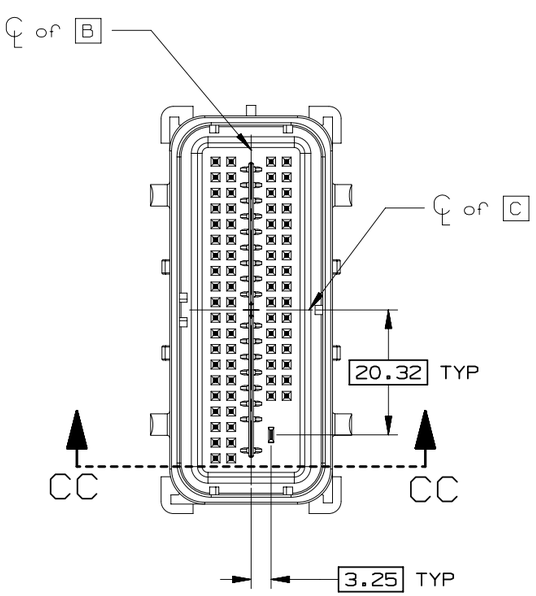

73 CKT COMPONENT
CONNECTOR INTERFACE

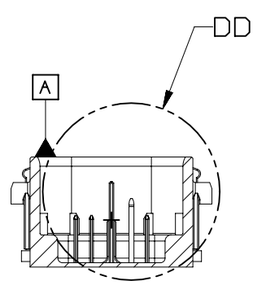

SECTION CC-CC

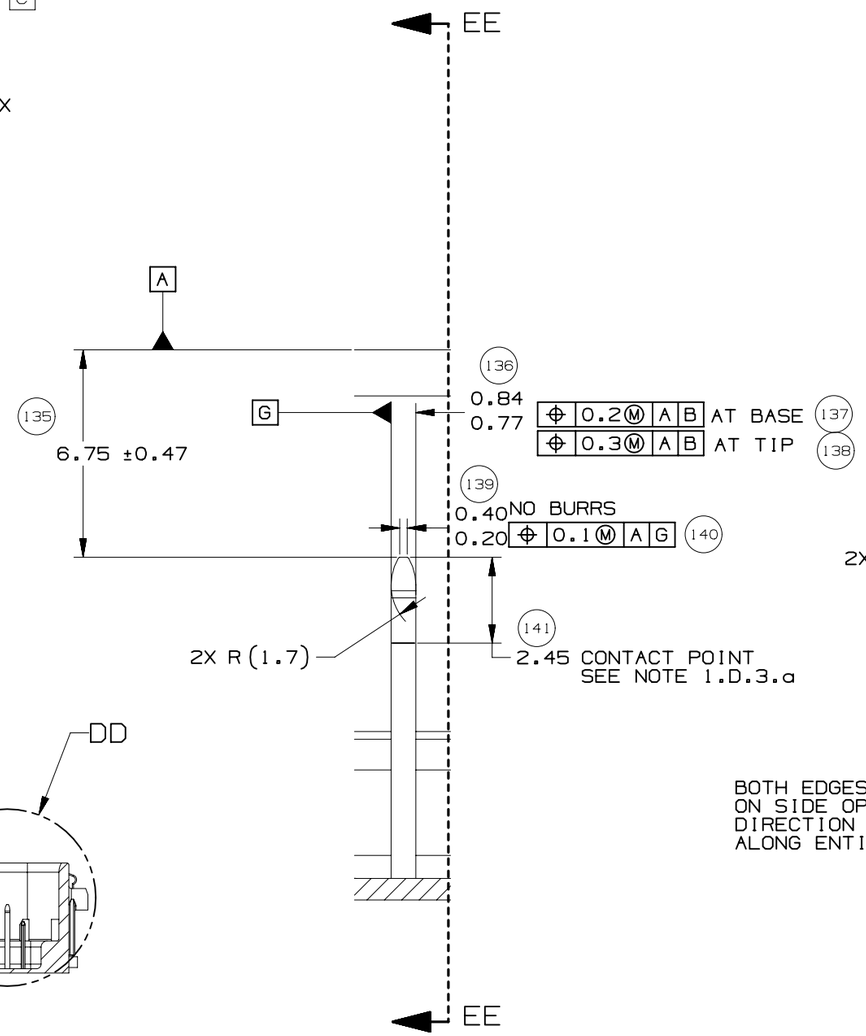

DETAIL DD
TYPICAL
SCALE 5:1

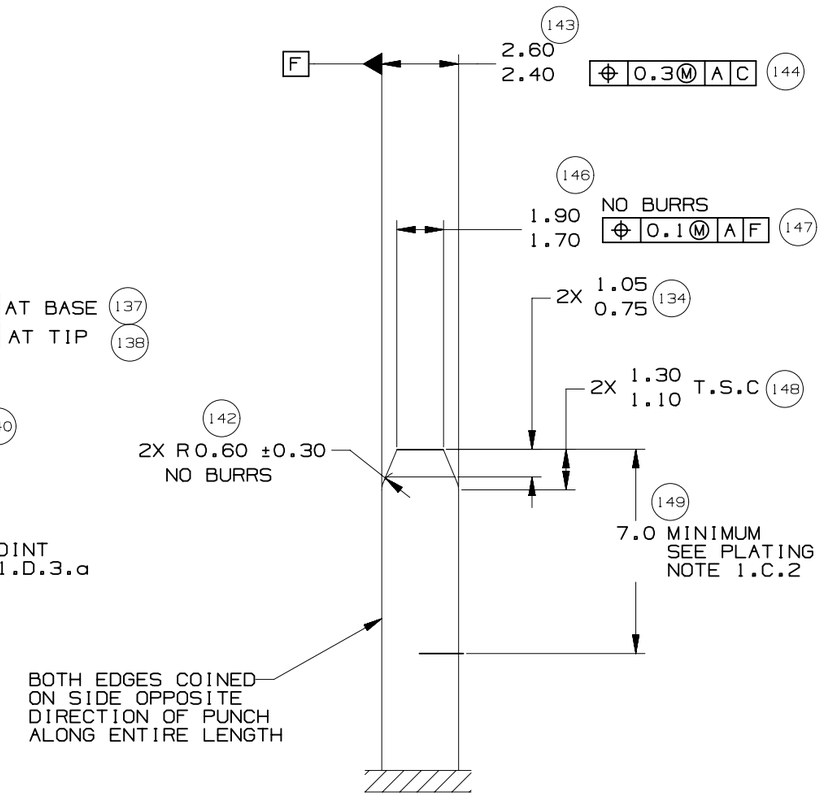

SECTION EE-EE
TYPICAL

GM	PAGE TITLE COMPONENT CONNECTOR INTERFACE		DRAWING NUMBER 12672833	DWG STATUS ST: R	REV: 001	PDI:	PAGE NUMBER 21 OF 22

MOLEX MX64 RECEPTACLE TERMINAL INFORMATION							
ITEM	MOLEX P/N	GM P/N	WIRE SIZE MM2	TYPE	PLATING	REEL WIND DIRECTION	COMMENTS
1	34736-0025		0.35	ISO	SILVER	LEFT	
2	34736-0026	12672850	0.35	ISO	SILVER	RIGHT	
3	34736-0027		0.5 / 0.75	ISO	SILVER	LEFT	
4	34736-0028	12672851	0.5 / 0.75	ISO	SILVER	RIGHT	

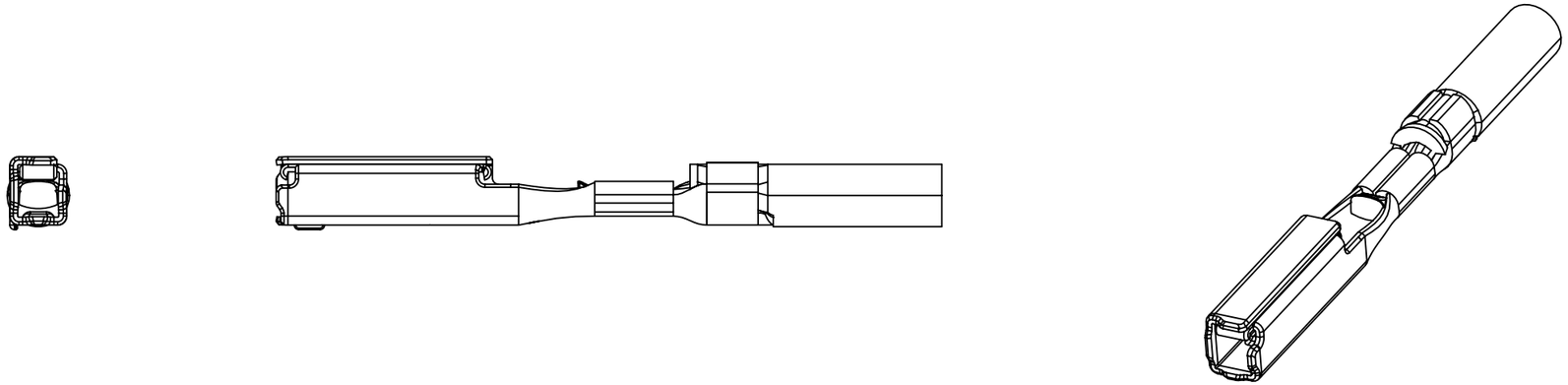

CAVITY PLUGS									
ITEM	MFG	MFG P/N	GM P/N RD	SIZE	COLOR	MFG DRAWING	PROD SPEC	APP SPEC	COMMENTS
1	MOLEX	34586-0001	12674820	0.64	NATURAL	SD-34586-001	PS-34566-0000	AS-34566-001	
2	YAZAKI	7158-3114-90	12674821	2.8	BLUE	7158-3114-90	YPES-11-04-062	YPES-15-299	

ITEM 1

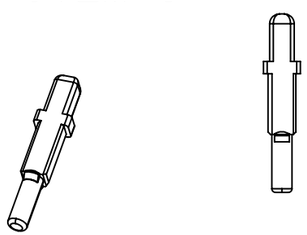

ITEM 2

GM	PAGE TITLE ADDITIONAL COMPONENTS REQUIRED		DRAWING NUMBER 12672833	DWG STATUS ST: R	REV: 001	PDI:	PAGE NUMBER 22 OF 22

INDEX

PAGE TITLE	PAGE
TITLE BLOCK	1
REVISION BLOCK	2
PART BLOCK	3
KPC BLOCK	4
COMPONENT TABLE	5
NOTES	6
NOTES	7
WIRE DRESS PACKAGING DIMENSIONS	8
LOCATION AND PACKAGING DIMENSIONS REFERENCING INTERFACE DATUMS B & C	9
LOCATION AND PACKAGING DIMENSIONS REFERENCING INTERFACE DATUM A	10
KEY ID REF - WIRE DRESS OPTION 0	11
KEY ID REF - WIRE DRESS OPTION 9	12
CIRCUIT CONFIGURATIONS	13
CIRCUIT CONFIGURATIONS	14
COMPONENT CONNECTOR INTERFACE	15
COMPONENT CONNECTOR INTERFACE	16
COMPONENT CONNECTOR INTERFACE	17
COMPONENT CONNECTOR INTERFACE	18
COMPONENT CONNECTOR INTERFACE	19
COMPONENT CONNECTOR INTERFACE	20
COMPONENT CONNECTOR INTERFACE	21
ADDITIONAL COMPONENTS REQUIRED	22

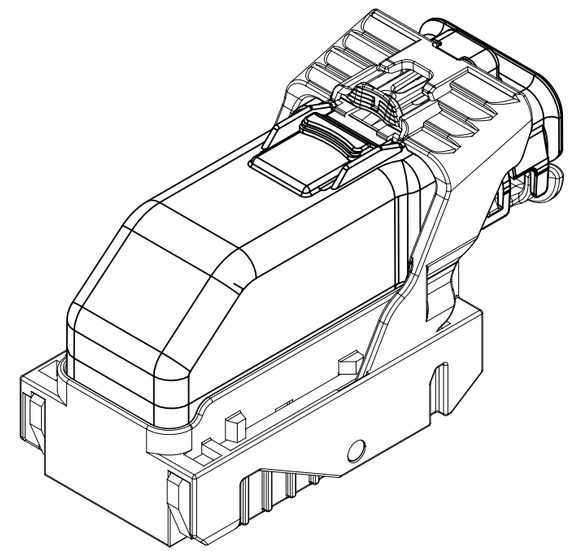

ISO VIEW

GM

UNLESS OTHERWISE SPECIFIED: THIS DOCUMENT IS IN ACCORDANCE WITH ASME Y14.5M-1994 AS AMMENDED BY THE GM GLOBAL DIMENSIONING AND TOLERANCING ADDENDUM-1997. ALL GEOMETRIC TOLERANCES AND RELATED DATUMS APPLY RFS. RULE #1 (PERFECT FORM AT MMC) DOES NOT APPLY WHEN A RELATIONSHIP BETWEEN FEATURES IS ESTABLISHED BY ORIENTATION OR LOCATION TOLERANCES. SEPARATE POSITION CALLOUTS MAY BE GAGED SEPARATELY REGARDLESS OF DATUM REFERENCES.

CHANGE RESTRICTED
NO MANUAL CHANGES

DO NOT SCALE

METRIC

DIMENSIONS SHOWN IN MILLIMETERS UNLESS OTHERWISE SPECIFIED

REFERENCE
12H (MOLEX AUTOMOTIVE)

	DATE
DRAFTER	05JN15
APVD1	
APVD2	
APVD3	
APVD4	
APVD5	

DRAWING NAME
HARNESS CONN ASM-SEALED 52/66/73/80 CKTS,MX123

DRAWING NUMBER
12672833

DWG STATUS		
ST	REV	PDI
R	001	

PAGE NUMBER
1 OF 22

PAGE	DWG STATUS					REVISION HISTORY	AUTH	DR	CK	ENG
	DATE	ST	REV	CHG	PDI					
	05JN15	R	001			RELEASED TO PRODUCTION AT DLS A	CRMRJE	DFK		

PAGE	DWG STATUS					REVISION HISTORY	AUTH	DR	CK	ENG
	DATE	ST	REV	CHG	PDI					

GM	PAGE TITLE REVISION BLOCK		DRAWING NUMBER 12672833	DWG STATUS ST: R REV: 001 PDI:		PAGE NUMBER 2 OF 22

HIERARCHY /QUANTITY	DWG ITM	DWG RLTN SHIP	PART NUMBER	P-A ITM	DLS	ST	REV	PDI	NMCI	MASS (KG)	PART NAME	NOTES
	28	RD	12674821		A	C	001			0.000	YAZAKI: 7158-3114-90	2.8MM CAVITY PLUG
	27	RD	12674820		A		001			0.000	PLUG-WRG HARN CONN MX0.64	
	26	RD	12672851		A		001			0.000	TERM-AG 0.5MM/0.75MM ISO,MX64	
	25	RD	12672850		A		001			0.000	TERM-AG 0.35MM ISO,MX64	
	24	RD	12582676		A	C	003			0.011	WIRE HARNESS COVER	52/66/73/80 WAY
	23	RD	12672869		A	2	001			0.050	HARN CONN ASM 80 CKT	KEY J OPTION 9
	22	RD	12672871		A	2	001			0.050	HARN CONN ASM 80 CKT	KEY H OPTION 9
	21	RD	12672873		A	2	001			0.050	HARN CONN ASM 80 CKT	KEY G OPTION 9
	20	RD	12672868		A	2	001			0.050	HARN CONN ASM 80 CKT	KEY J OPTION 0
	19	RD	12672870		A	2	001			0.050	HARN CONN ASM 80 CKT	KEY H OPTION 0
	18	RD	12672872		A	2	001			0.050	HARN CONN ASM 80 CKT	KEY G OPTION 0
	17	RD	12672867		A	2	001			0.050	HARN CONN ASM 73 CKT	KEY F OPTION 9
	16	RD	12672865		A	2	001			0.050	HARN CONN ASM 73 CKT	KEY C OPTION 9
	15	RD	12672863		A	2	001			0.050	HARN CONN ASM 73 CKT	KEY B OPTION 9
	14	RD	12672861		A	2	001			0.050	HARN CONN ASM 73 CKT	KEY A OPTION 9
	13	RD	12672866		A	2	001			0.050	HARN CONN ASM 73 CKT	KEY F OPTION 0
	12	RD	12672864		A	2	001			0.050	HARN CONN ASM 73 CKT	KEY C OPTION 0
	11	RD	12672862		A	2	001			0.050	HARN CONN ASM 73 CKT	KEY B OPTION 0
	10	RD	12672860		A	2	001			0.050	HARN CONN ASM 73 CKT	KEY A OPTION 0
	09	RD	12672859		A	2	001			0.050	HARN CONN ASM 66 CKT	KEY C OPTION 9
	08	RD	12672857		A	2	001			0.050	HARN CONN ASM 66 CKT	KEY A OPTION 9
	07	RD	12672858		A	2	001			0.050	HARN CONN ASM 66 CKT	KEY C OPTION 0
	06	RD	12672856		A	2	001			0.050	HARN CONN ASM 66 CKT	KEY A OPTION 0
	05	RD	12672855		A	2	001			0.054	HARN CONN ASM 52 CKT	KEY C OPTION 9
	04	RD	12672853		A	2	001			0.050	HARN CONN ASM 52 CKT	KEY A OPTION 9
	03	RD	12672854		A	2	001			0.054	HARN CONN ASM 52 CKT	KEY C OPTION 0
	02	RD	12672852		A	2	001			0.050	HARN CONN ASM 52 CKT	KEY A OPTION 0
	01	RD	12672833		A		001			8.751	HARNESS CONN ASM-SEALED 52/66/73/80 CKTS,MX	
											DRAWING	

PARTS SHOWN ON DRAWING

KEY PRODUCT CHARACTERISTICS
(IN ACCORDANCE WITH QN 1805 OR QN 1050)

▽ SAFETY/COMPLIANCE	TOTAL ON DRAWING	4
◇ FIT/FUNCTION	LAST NO. USED	4

NO	TYPE	DESCRIPTION	RATIONALE	PAGE/ZONE
1	F/F	32.68	IMPROVE CONNECTOR SYSTEM MATING	16
2	F/F	29.00	INSURE PROPER RELEASE OF LEVER	16
3	F/F	15.25	INSURE FINAL MATE POSITION	17
4	F/F	POSITIONAL TOLERANCE (2 PLACES)	INSURE CONNECTOR SYSTEM MATEABILITY	20

					APPLICABLE COMPONENTS					
LINE	MFG.	MFG. P/N	GM P/N	EFFECTIVE DATE	DESCRIPTION	KEY OPTION	WIRE DRESS OPTION	KEY CONFIG.	COLOR	STATUS
-										
1	MOLEX	34565-0003	12582676	02JN03	MX123 DRESS COVER 52/66/73/80 CKT	N/A	N/A	N/A	BLACK	AVAILABLE
2	MOLEX	160094-0001	12672852	01SP13	MX123 HRNS CONN ASSY 52 CKT	A	0	1458	BLACK	AVAILABLE
3	MOLEX	160094-0003	12672854	01SP13	MX123 HRNS CONN ASSY 52 CKT	C	0	2467	BLUE	AVAILABLE
4	MOLEX	160094-0013	12672853	01SP13	MX123 HRNS CONN ASSY 52 CKT	A	9	1458	BLACK	AVAILABLE
5	MOLEX	160094-0015	12672855	01SP13	MX123 HRNS CONN ASSY 52 CKT	C	9	2467	BLUE	AVAILABLE
6	MOLEX	34822-0013	12672856	01SP13	MX123 HRNS CONN ASSY 66 CKT	A	0	1458	BLACK	AVAILABLE
7	MOLEX	34822-0033	12672858	01SP13	MX123 HRNS CONN ASSY 66 CKT	C	0	2467	BLUE	AVAILABLE
8	MOLEX	34822-0023	12672857	01SP13	MX123 HRNS CONN ASSY 66 CKT	A	9	1458	BLACK	AVAILABLE
9	MOLEX	34822-0043	12672859	01SP13	MX123 HRNS CONN ASSY 66 CKT	C	9	2467	BLUE	AVAILABLE
10	MOLEX	34566-0103	12672860	11JN04	MX123 HRNS CONN ASSY 73 CKT	A	0	1458	BLACK	AVAILABLE
11	MOLEX	34566-0203	12672862	11JN04	MX123 HRNS CONN ASSY 73 CKT	B	0	1468	ST GRAY	AVAILABLE
12	MOLEX	34566-0303	12672864	09AP08	MX123 HRNS CONN ASSY 73 CKT	C	0	2467	BLUE	AVAILABLE
13	MOLEX	34566-0603	12672866	05DC14	MX123 HRNS CONN ASSY 73 CKT	F	0	1357	NATURAL	AVAILABLE
14	MOLEX	34566-1303	12672861	11JN04	MX123 HRNS CONN ASSY 73 CKT	A	9	1458	BLACK	AVAILABLE
15	MOLEX	34566-1403	12672863	11JN04	MX123 HRNS CONN ASSY 73 CKT	B	9	1468	ST GRAY	AVAILABLE
16	MOLEX	34566-1503	12672865	09AP08	MX123 HRNS CONN ASSY 73 CKT	C	9	2467	BLUE	AVAILABLE
17	MOLEX	34566-1803	12672867	05DC14	MX123 HRNS CONN ASSY 73 CKT	F	9	1357	NATURAL	AVAILABLE
18	MOLEX	34566-0703	12672872	09AP08	MX123 HRNS CONN ASSY 80 CKT	G	0	1358	BLUE	AVAILABLE
19	MOLEX	34566-0803	12672870	11JN04	MX123 HRNS CONN ASSY 80 CKT	H	0	2458	ST GRAY	AVAILABLE
20	MOLEX	34566-0903	12672868	T.B.D	MX123 HRNS CONN ASSY 80 CKT	J	0	2457	BLACK	NOT ACTIVE
21	MOLEX	34566-1903	12672873	09AP08	MX123 HRNS CONN ASSY 80 CKT	G	9	1358	BLUE	AVAILABLE
22	MOLEX	34566-2003	12672871	11JN04	MX123 HRNS CONN ASSY 80 CKT	H	9	2458	ST GRAY	AVAILABLE
23	MOLEX	34566-2103	12672869	T.B.D	MX123 HRNS CONN ASSY 80 CKT	J	9	2457	BLACK	NOT ACTIVE
24	MOLEX	34736-0028	12672851	01AU10	MX64 RCPT TERM Ag 0.5mm/0.75mm ISO GAGE B (RIGHT PAYOFF)	N/A	N/A	N/A	N/A	AVAILABLE
25	MOLEX	34736-0026	12672850	01AU10	MX64 RCPT TERM Ag 0.35mm ISO GAGE B (RIGHT PAYOFF)	N/A	N/A	N/A	N/A	AVAILABLE
26	MOLEX	34586-0001	12674820	11JN04	MX123 0.64mm GROMMET PLUG	N/A	N/A	N/A	NATURAL	AVAILABLE
27	YAZAKI	7116-4150-02	12588066	02JN03	2.8mm YESC SEALED FEMALE TERMINAL TIN 0.35mm2-0.50mm2	N/A	N/A	N/A	N/A	NOT ACTIVE
28	YAZAKI	7116-4151-02	12588067	02JN03	2.8mm YESC SEALED FEMALE TERMINAL TIN 0.75mm2-1.0mm2	N/A	N/A	N/A	N/A	NOT ACTIVE
29	YAZAKI	7116-4152-02	12582685	02JN03	2.8mm YESC SEALED FEMALE TERMINAL TIN 1.5mm2-2.5mm2	N/A	N/A	N/A	N/A	AVAILABLE
30	YAZAKI	7158-3111-60	12588068	02JN03	2.8mm CABLE SEAL (wire O.D. range 1.2mm-1.9mm)	N/A	N/A	N/A	GREEN	NOT ACTIVE
31	YAZAKI	7158-3112-70	12588069	02JN03	2.8mm CABLE SEAL (wire O.D. range 1.8mm-2.3mm)	N/A	N/A	N/A	YELLOW	NOT ACTIVE
32	YAZAKI	7158-3113-40	12582686	02JN03	2.8mm CABLE SEAL (wire O.D. range 2.1mm-3.0mm)	N/A	N/A	N/A	WHITE	AVAILABLE
33	YAZAKI	7158-3114-90	12674821	02JN03	2.8mm YESC CAVITY PLUG	N/A	N/A	N/A	BLUE	AVAILABLE
34	MOLEX	63825-8400	N/A	02JN03	MX64 TERM HAND CRIMP TOOL	N/A	N/A	N/A	N/A	AVAILABLE
35	MOLEX	63813-1400	XX019826	02JN03	MX64 TERM SERVICE TOOL	N/A	N/A	N/A	N/A	AVAILABLE
36	MOLEX	63902-5300	N/A	02JN03	MX64 CRIMP APPLICATOR with TOOL KIT 0.5/0.75mm2 PAYOFF DIRECTION D (left payoff) (contact Molex for payoff detail)	N/A	N/A	N/A	N/A	AVAILABLE
37	MOLEX	63902-5370	N/A	02JN03	MX64 APPLICATOR TOOL KIT 0.5/0.75mm2	N/A	N/A	N/A	N/A	AVAILABLE
38	MOLEX	63902-5100	N/A	02JN03	MX64 CRIMP APPLICATOR with TOOL KIT 0.35mm2 PAYOFF DIRECTION D (left payoff) (contact Molex for payoff detail)	N/A	N/A	N/A	N/A	AVAILABLE
39	MOLEX	63902-5170	N/A	02JN03	MX64 APPLICATOR TOOL KIT 0.35mm2	N/A	N/A	N/A	N/A	AVAILABLE
40	SPX	J35616-64	T.B.D.	02JN03	0.64mm PROBE TOOL (for rcpt)	N/A	N/A	N/A	N/A	AVAILABLE
41	SPX	J35616-64A	T.B.D.	02JN03	0.64mm PROBE TOOL WITH EXT (for rcpt)	N/A	N/A	N/A	N/A	AVAILABLE
42	SPX	J35616-65	T.B.D.	02JN03	0.64mm PROBE TOOL WITH EXT (for pin)	N/A	N/A	N/A	N/A	AVAILABLE
43	SPX	J35616-4A	T.B.D.	02JN03	2.8mm PROBE TOOL (for rcpt)	N/A	N/A	N/A	N/A	AVAILABLE
44	YAZAKI	X39899-J374	12094430	02JN03	2.8mm TERM SERVICE TOOL	N/A	N/A	N/A	N/A	AVAILABLE
45	TQI	7000-1006	N/A	15JN15	52 CKT PASS THROUGH ADAPTERS	N/A	N/A	N/A	BLACK	AVAILABLE
46	TQI	7000-1002	N/A	15JN15	66 CKT PASS THROUGH ADAPTERS	N/A	N/A	N/A	BLACK	AVAILABLE
47	TQI	79917-0061	N/A	15JN15	73 CKT PASS THROUGH ADAPTERS	N/A	N/A	N/A	BLACK	AVAILABLE
48	TQI	79917-0066	N/A	15JN15	80 CKT PASS THROUGH ADAPTERS	N/A	N/A	N/A	BLACK	AVAILABLE

* - MX123 DRESS COVER 52/66/73/80 CKT MATES TO ANY MX123 HARN CONN ASSY SHOWN ON TABLE ABOVE

NOTES: UNLESS OTHERWISE SPECIFIED

1. MATERIAL FOR INTERFACE:

A. RESIN:
   1. 30% G.F. PBT; 20% MAX. (BY WEIGHT) REGRIND.
   2. MATING CONNECTOR INTERFACE PART COLOR MUST BE SAME AS MATCHING KEYED HARNESS CONNECTOR ASSEMBLY.
   3. MUST BE VALIDATED FOR INDIVIDUAL DEVICE APPLICATION REQUIREMENTS.

B. 0.64MM PINS:
   1. BASE MATERIAL: COPPER ALLOY; CONDUCTIVITY >= 28% IACS AT 20°C; TENSILE STRENGTH >= 635 N/mm²;SURFACE ROUGHNESS R_a 6 MAX.
   2. PLATING FINISH: SILVER (Ag). PLATING TO BE 1.9-3.3 um ELECTRODEPOSITED SEMI-BRIGHT SILVER OVER 1.25-2.25 um DUCTILE SULPHAMATE NICKEL PER NOTE 1(D).
   3. ANTI-TARNISH: SYNTHETIC HYDROCARBON CONTACT SURFACE FINISH OR EQUIVALENT APPLIED WITHOUT VOID TO CONTACT AREA (MIN 3.7mm FROM PIN TIP).

C. 2.8MM BLADE:
   1. BASE MATERIAL: COPPER ALLOY; CONDUCTIVITY>= 28% IACS AT 20°C; TENSILE STRENGTH >= 350 N/mm²; SURFACE ROUGHNESS R_a 6 MAX.
   2. PLATING FINISH: TIN. PLATING TO BE 2.5-5.0 um ELECTRODEPOSITED TIN, MATTE FINISH OVER 1.25-2.5um DUCTILE SULPHAMATE NICKEL PER NOTE 1(D).

D. PLATING REQUIREMENTS:

   1. SILVER PLATING
      a. 99.5% PURE SEMI-BRIGHT WITH NO ORGANIC BRIGHTNERS OR CHROMATES.

   2. NICKEL PLATING
      a. ELECTRODEPOSITED DUCTILE SULFAMATE NICKEL WITH A NON-BRIGHTENED FINISH. NO ORGANIC OR BRIGHTENING AGENTS SHALL BE ALLOWED.
      b. SHALL ONLY BE USED AS AN UNDERLYING PLATING AND MAY NOT BE USED AS AN ELECTRICAL CONTACT SURFACE PLATING.
      c. SHALL BE NODULE FREE WHEN VIEWED AT 10X MAGNIFICATION IN MEASURED IN CONTACT SURFACE AREA PLUS 0.5MM PERIMETER AROUND THE CONTACT SURFACE AREA.
      d. ALL PLATINGS SHALL HAVE A 1.0% MAXIMUM BY WEIGHT IMPURITIES. IMPURITIES ARE DEFINED AS ALL ELEMENTS NOT THE PRIMARY PLATING OR HARDENING AGENT IF APPLICABLE, AS DETERMINED BY WET CHEMICAL ANALYSIS OR AUGER METHOD. NO SINGLE IMPURITY SHALL EXCEED 0.1% MAXIMUM BY WEIGHT.

   3. TESTING
      a. THICKNESS TO BE MEASURED IN CONTACT SURFACE AREA PLUS 0.5MM PERIMETER AROUND THE CONTACT SURFACE AREA AS DESIGNATED IN THE DRAWING. THICKNESS SHALL BE DETERMINED BY METHOD OF X-RAY (XRF).
      b. PLATING ADHESION SHALL BE TESTED BY A BEND TEST FOR ALL METALS. THE TEST SAMPLE SHALL BE BENT 90 DEGREES TO DETERMINE DEPOSIT ADHESION. TESTING SHALL BE COMPLETED IN ACCORDANCE WITH ASTM SPEC B571.

2. DESIGN - GENERAL:

   A. THIS IS A 100% CAD GENERATED PART. THE CAD MATHEMATICAL DATA IS THE MASTER FOR THIS PART. FOR DIMENSIONAL OR ANY INFORMATION NOT SHOWN ON THIS DRAWING, ANALYZE THE CAD MODEL.
   B. TOLERANCES:
      1. LINEAR 0.X ± 0.30
                 0.XX ± 0.10
                 0.XXX ± 0.10
      2. ANGULAR X° ± 3°
      3. ⌓ | 1.0 | A | B | C
   C. MINIMUM WALL THICKNESS REQUIRED: 1.3mm.
   D. CORNERS SHOWN AS SHARP TO BE R 0.2 MAX.
   E. LETTERING SHALL BE 0.15 MAX RAISED IN 0.20 MAX RECESS PAD. THIS INCLUDES MATERIAL CODE, RECYCLING CODE, CAVITY ID AND DATE CODE.
   F-1. PARTS MUST BE FREE OF DISCOLORATION, SALT RESIDUE AND OTHER IMPERFECTIONS THAT AFFECT FIT OR FUNCTION.
   F-2. SCRATCHES OR DENTS NOT TO EXCEED 0.013mm IN DEPTH.
   G. FOLLOWING PRODUCTION CODES TO BE PERMANENTLY MARKED & HUMAN READABLE TO A LETTER HEIGHT OF 1.5 ±0.5MM X 0.3 MAX DEEP
      1. MATERIAL #: XXXXX-XXXX
      2. DATE CODE: JJJY (JULIAN DAY, LAST DIGIT OF YEAR)
      3. INSPECTION MACHINE CODE + SERIAL #: X_XXXXX

3. DESIGN - MANUFACTURING:

   A. DRAFT TO BE WITHIN TOLERANCE.
   B. ALLOWABLE FLASH MAX 0.2 HIGH X MAX 0.13 THICK.
   C. ALLOWABLE PARTING LINE MISMATCH 0.2 MAX.
   D. EJECTOR PINS MARK TO BE FLUSH TO 0.25 MAX DEPRESSED.
   E. ALLOWABLE GATE VESTIGE FLUSH TO 0.25 MAX PROTRUSION.
   F. NO EXTERNAL MOLD RELEASE AGENT ALLOWED DURING MANUFACTURING.
   G. STEEL THAT FORMS THE INDICATED SURFACE MUST BE POLISHED WITH A DIAMOND FINISH (SPI A-2) OVER THE FULL PERIPHERY OF THE TOOL. SURFACE MUST HAVE NO MISMATCH.
   H. ANY PROCESS LUBRICANT REMAINING ON THE TERMINAL MUST NOT VARNISH OR DEGRADE IT'S ELECTRICAL PERFORMANCE UP TO A MAXIMUM CLASS AMBIENT TEMPERATURE PER SAE USCAR-2 FOR 1008 HOURS. PROCESS LUBRICANTS SHOULD BE APPROVED BY THE RESPONSIBLE ENGINEER.
   J. OPTIONAL FEATURES PROVIDED FOR AUTOMATION.
   K. PART MUST BE FREE FROM BURRS AND SHARP EDGES, WHICH MIGHT BE DETRIMENTAL TO SATISFACTORY ASSEMBLY, SAFE HANDLING OR FUNCTION OF PART.
   L. PARTS AS DELIVERED TO ASSEMBLY SHALL BE CLEAN AND FREE OF DEBRIS, RESIDUAL ABRASIVE MATERIAL AND CORROSION PRODUCTS ADVERESLY AFFECTING FUNCTION OR APPEARENCE.
   M. RESTRICTED AND REPORTABLE SUBSTANCES FOR PARTS PER GMW3059.

NOTES: UNLESS OTHERWISE SPECIFIED

4. SYSTEM REQUIREMENTS:

   A. HARNESS CONNECTOR IS COMPATIBLE WITH THE FOLLOWING ISO WIRE SIZE NO'S:
      0.35mm2, MEETING GMW15626 - MIN OD OF 1.30MM
      0.50mm2, MEETING GMW15626
      0.75mm2, MEETING GMW15626 - MAX OD OF 2.06MM

   B. CABLE TIE SPECIFICATIONS:
      1. CABLE TIE:
         TENSILE RATING: 220N / (50lbs) MIN
         TIE LENGTH: 186mm MIN
         TIE WIDTH: 4.75mm MAX
         MATERIAL: NYLON
      2. INSTALLATION:
         CABLE TIE TENSION: 190N MIN
      3. DRESSED WIRE BUNDLE PACKAGING: SEE FIG. 1

   C. WHEN MATED WITH COMPONENT CONNECTOR INTERFACE AND/OR DRESS COVER, HARNESS CONNECTOR SYSTEM CONFORMS TO THE FOLLOWING:
      1. SAE/USCAR-2, REV: 3 APRIL, 2001; CLASS 3
      2. FIELD CORRELATED LIFE TEST, SAE/USCAR-20, NOV. 2001
      3. GMW #3191 AUGUST 22, 2000 (DRAFT); TEMPERATURE CLASS 3, SEALING CLASS 1, VIBRATION CLASS 2
      4. RESTRICTED AND REPORTABLE CHEMICALS PER GMW #3059, REV: D AUGUST 2002
      5. TPA USER FORCES (FULLY POPULATED WITH TERMINALS)
         a. REMOVAL FROM LOCK TO PRE-SET: <=120N

   D. WIRE SPECIFICATIONS:
      1. WIRE SURFACE MUST BE FREE OF SCRATCHES, GROOVES OR DENTS WHERE FUNCTIONAL

5. TERMINAL CURRENT RATINGS:

   A. MX64 RCPT TERM
      ALL TESTING DONE IN ACCORDANCE WITH USCAR-2 REV5 SECTION 5.3

      1. MX64 RCPT TERM Ag 0.50/0.75mm2 CRIMPED TO 0.75mm2 ISO WIRE AND MATED TO MX123 0.64MM PIN: SEE TABLE BELOW
      2. MX64 RCPT TERM Ag 0.35mm2 CRIMPED TO 0.35mm2 ISO WIRE AND MATED TO MX123 0.64MM PIN: SEE TABLE BELOW

WIRE	CURRENT RATING			
	23'C	85'C	105'C	125'C
0.75mm2	11.3A	11.3A	9.5A	6.6A
0.50mm2	10.0A	10.0A	8.3A	5.7A
0.35mm2	8.5A	8.5A	7.1A	5.0A

   B. 2.8MM RCPT TERM
      ALL TESTING DONE IN ACCORDANCE WITH MOLEX DVP&R 0279 (TR # 7125)

      1. 2.8MM RCPT TERM TIN 2.0mm2 CRIMPED TO 2.0mm2 ISO WIRE AND MATED TO MX123 2.8MM BLADE: 25.6 AMPS AT 125°C

6. CONTACT MOLEX AUTOMOTIVE FOR AVAILABLE CUSTOM PATTERNS OF CAVITIES OPEN FOR CIRCUITS - SEE GM DRAWING 13507496

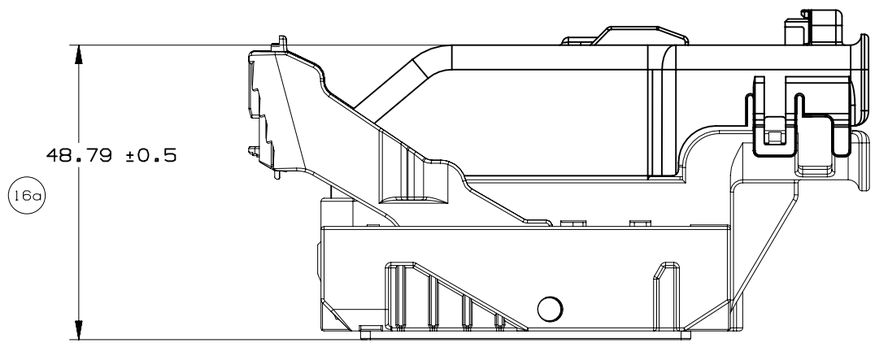

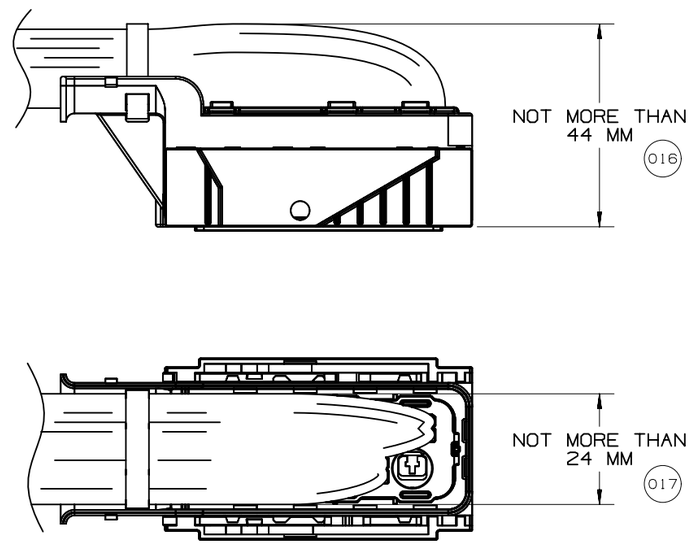

Fig. 1

GM	PAGE TITLE WIRE DRESS PACKAGING DIMENSIONS		DRAWING NUMBER 12672833	DWG STATUS			PAGE NUMBER
				ST	REV	PDI	
				R	001		8 OF 22

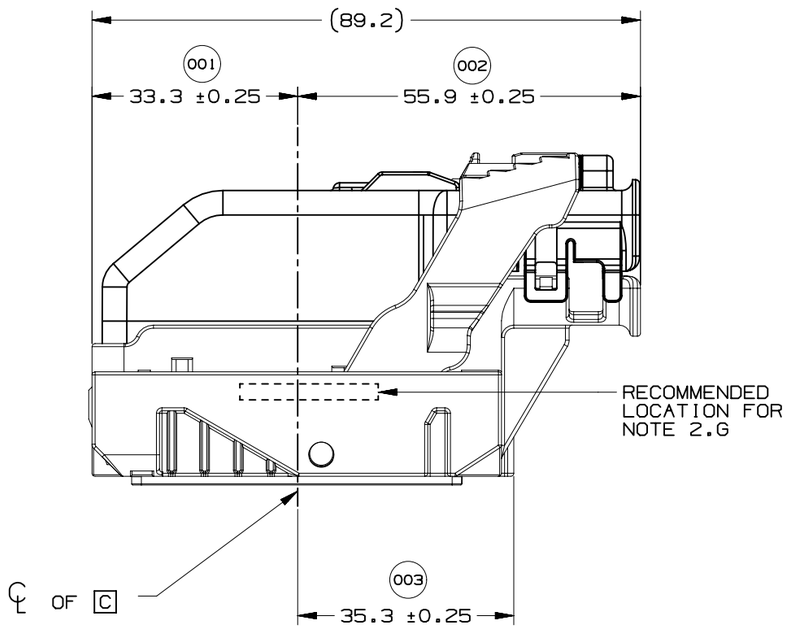

WIRE DRESS OPTION 0 SHOWN

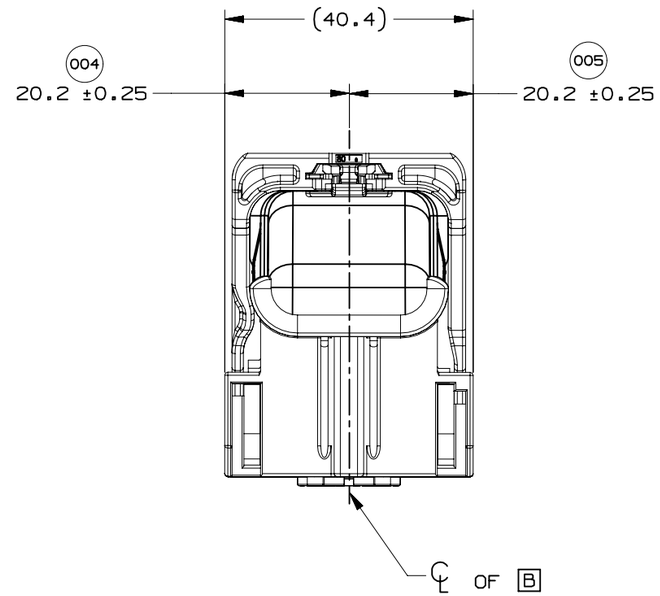

WIRE DRESS OPTION 0 SHOWN

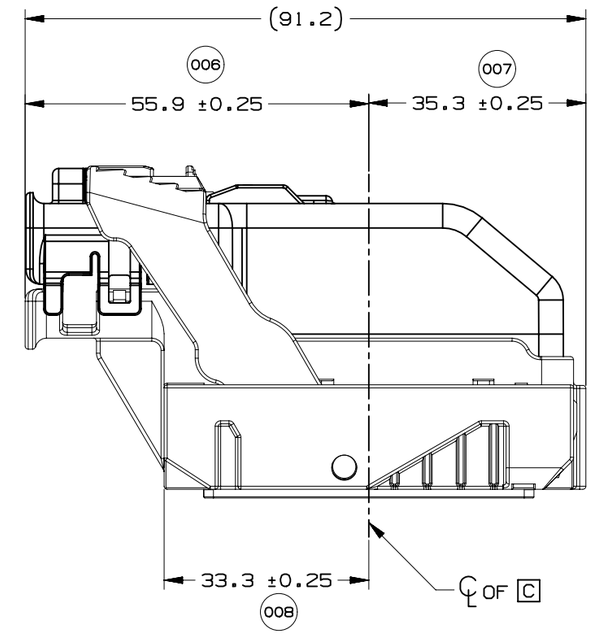

WIRE DRESS OPTION 9 SHOWN

GM	PAGE TITLE LOCATION AND PACKAGING DIMENSIONS REFERENCING INTERFACE DATUMS B & C		DRAWING NUMBER 12672833	DWG STATUS ST: R	REV: 001	PDI:	PAGE NUMBER 9 OF 22

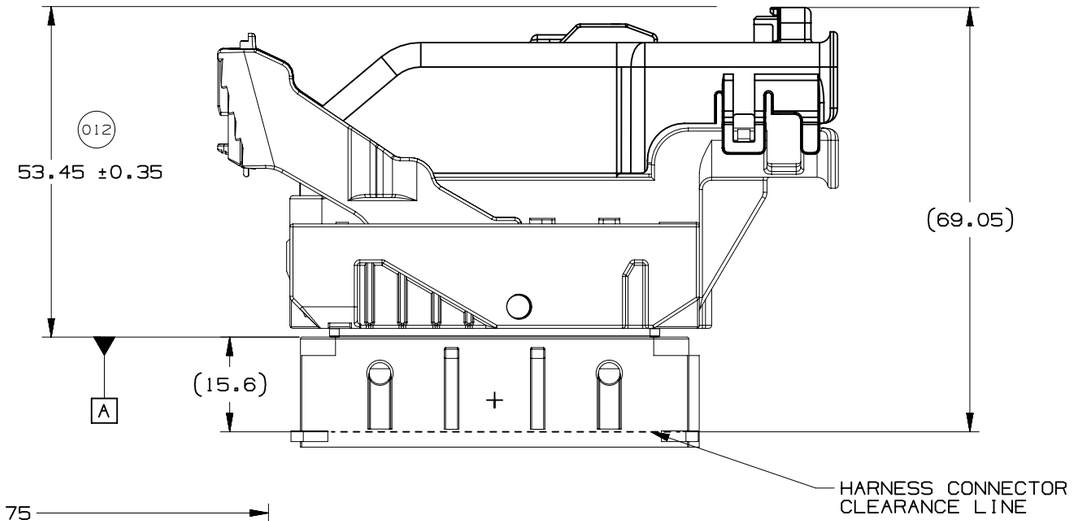

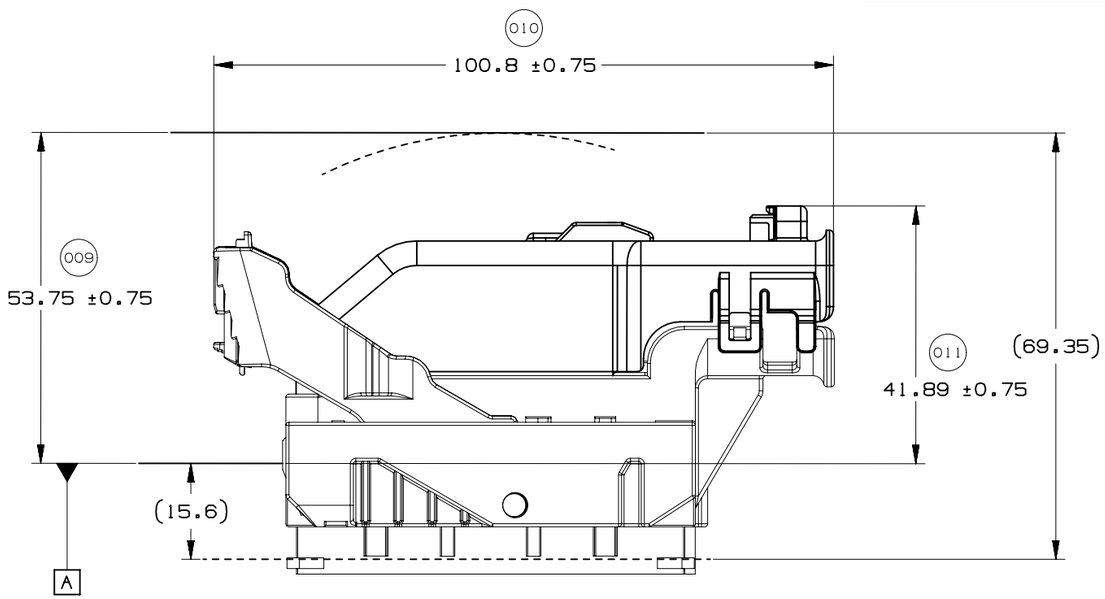

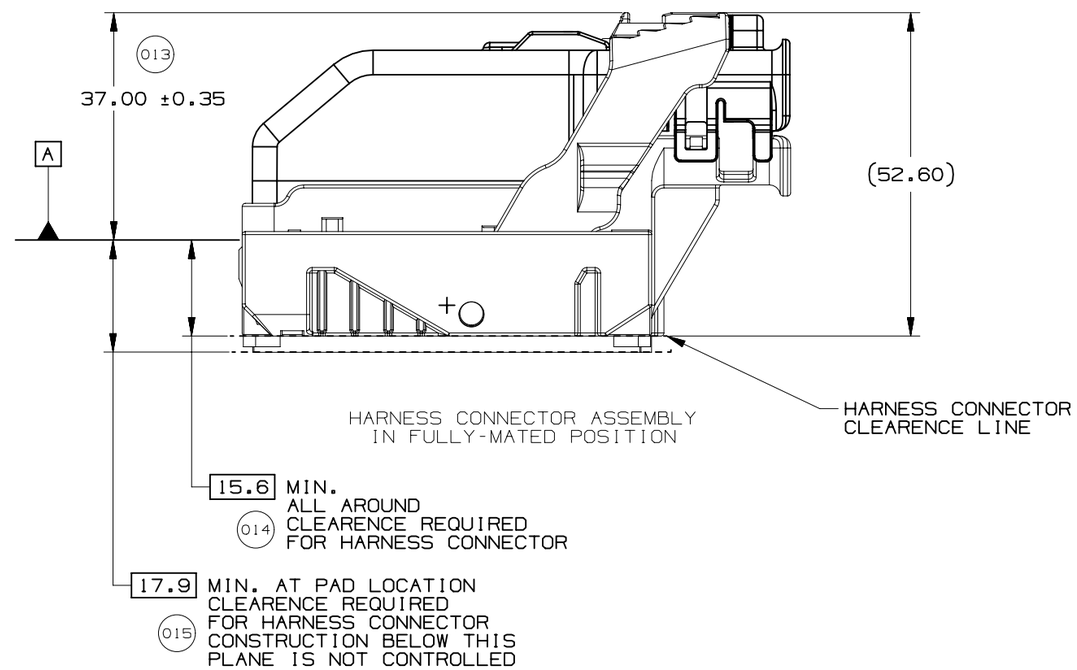

GM	PAGE TITLE LOCATION AND PACKAGING DIMENSIONS REFERENCING INTERFACE DATUM A		DRAWING NUMBER 12672833	DWG STATUS ST: R	REV: 001	PDI:	PAGE NUMBER 10 OF 22

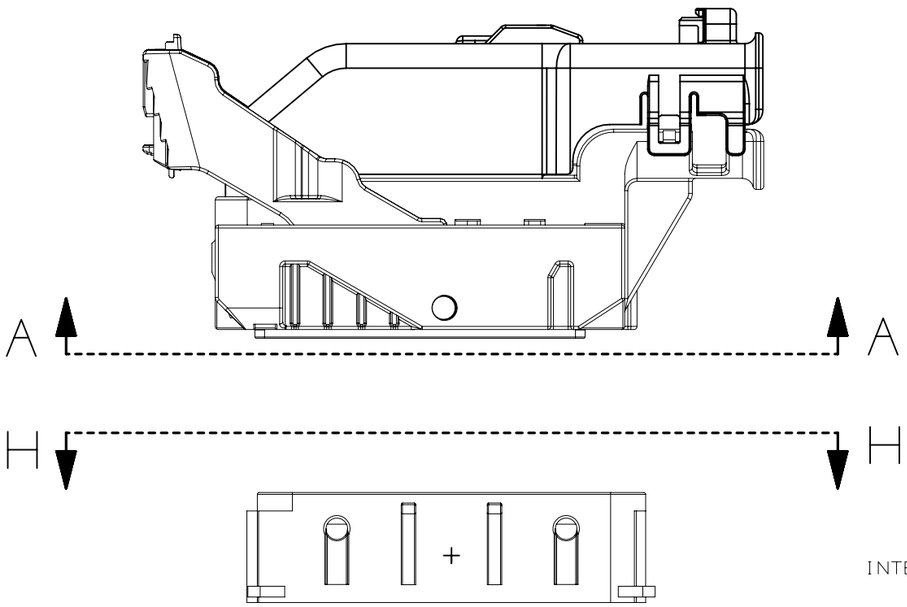

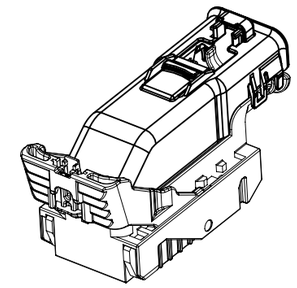

NOTE: REFERENCE THE COMPONENT TABLE
FOR KEY OPTIONS AND CONFIGURATIONS

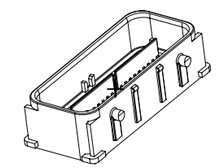

INTERFACE SIDE SHOWN ON ALL SECTION VIEWS

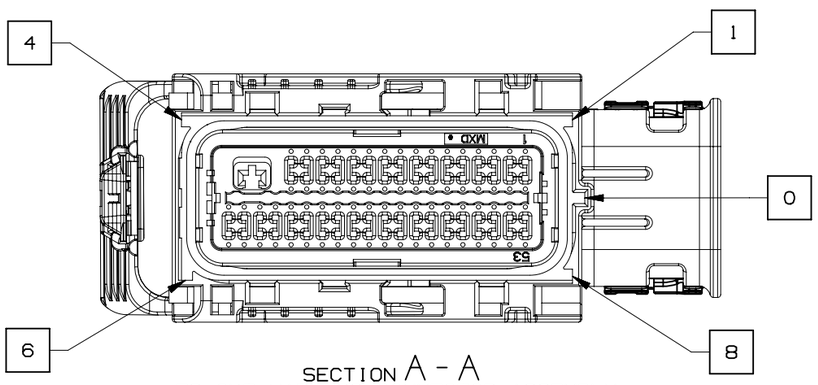

SECTION A - A
73 CKT HARNESS CONNECTOR ASSEMBLY
KEY OPTION B SHOWN

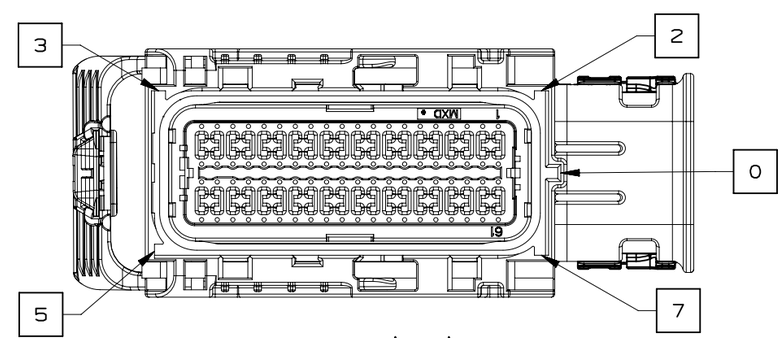

SECTION A - A
80 CKT HARNESS CONNECTOR ASSEMBLY
KEY OPTION K SHOWN

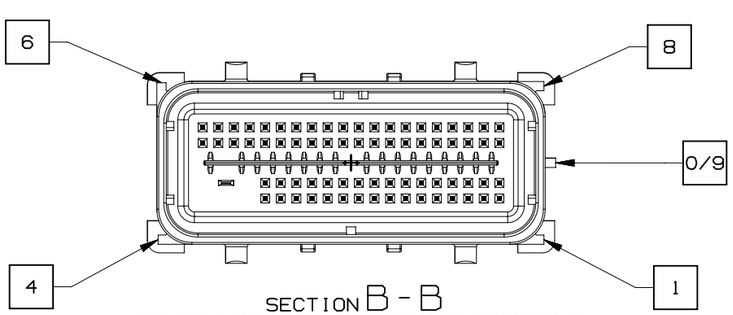

SECTION B - B
73 CKT HARNESS CONNECTOR ASSEMBLY
KEY OPTION B SHOWN

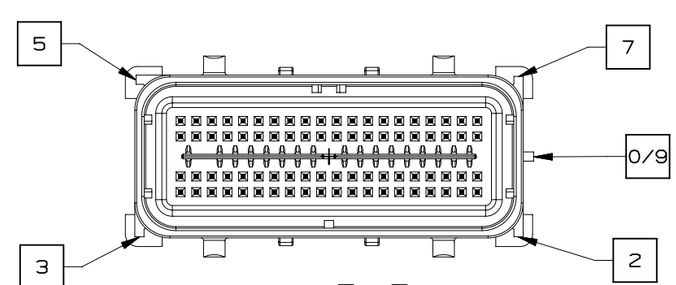

SECTION B - B
80 CKT HARNESS CONNECTOR ASSEMBLY
KEY OPTION K SHOWN

GM	PAGE TITLE KEY ID REF - WIRE DRESS OPTION 0		DRAWING NUMBER 12672833	DWG STATUS			PAGE NUMBER
				ST	REV	PDI	
				R	001		11 OF 22

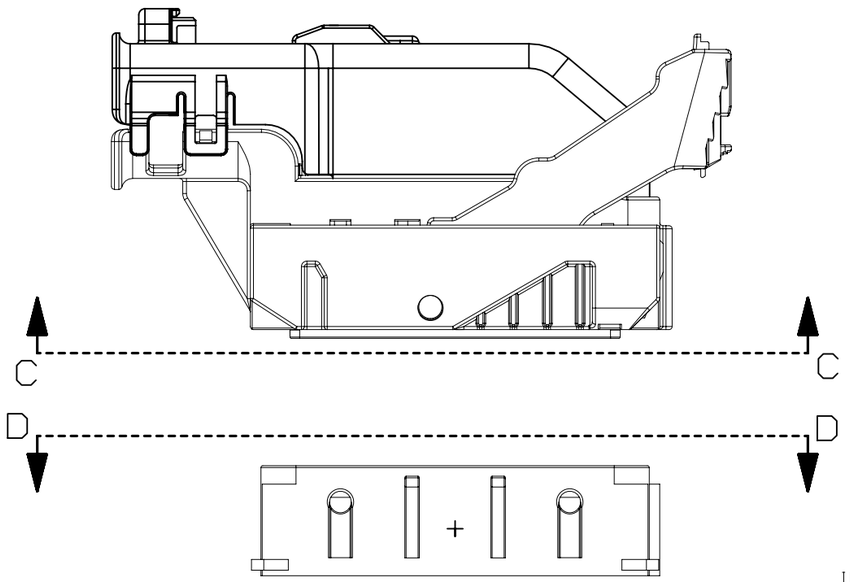

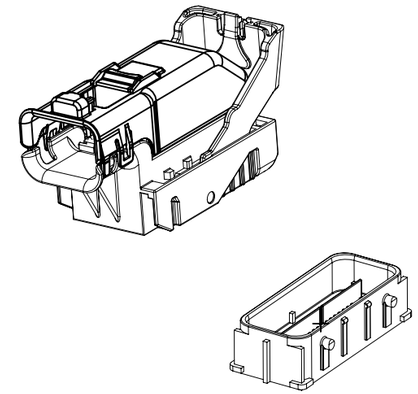

NOTE: REFERENCE THE COMPONENT TABLE
FOR KEY OPTIONS AND CONFIGURATIONS

INTERFACE SIDE SHOWN ON ALL SECTION VIEWS

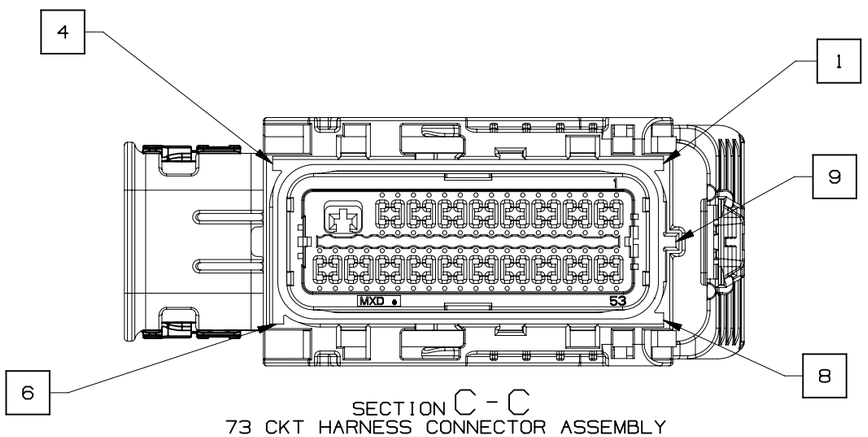

SECTION C - C
73 CKT HARNESS CONNECTOR ASSEMBLY
KEY OPTION B SHOWN

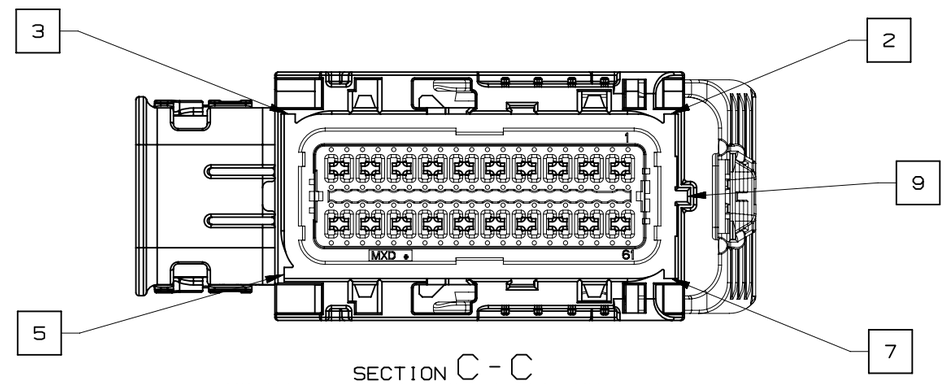

SECTION C - C
80 CKT HARNESS CONNECTOR ASSEMBLY
KEY OPTION K SHOWN

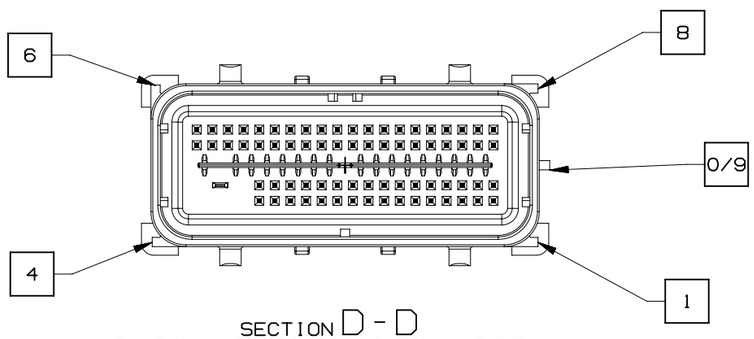

SECTION D - D
73 CKT HARNESS CONNECTOR ASSEMBLY
KEY OPTION B SHOWN

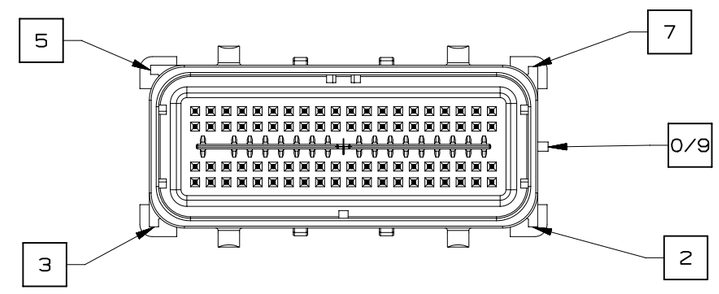

SECTION D - D
80 CKT HARNESS CONNECTOR ASSEMBLY
KEY OPTION K SHOWN

GM	PAGE TITLE KEY ID REF - WIRE DRESS OPTION 9		DRAWING NUMBER 12672833	DWG STATUS ST: R	REV: 001	PDI:	PAGE NUMBER 12 OF 22

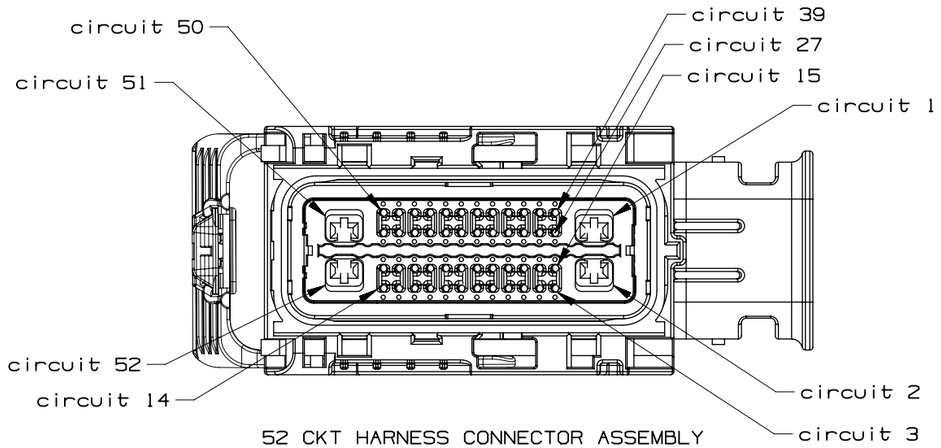

52 CKT HARNESS CONNECTOR ASSEMBLY
WIRE DRESS OPTION 0

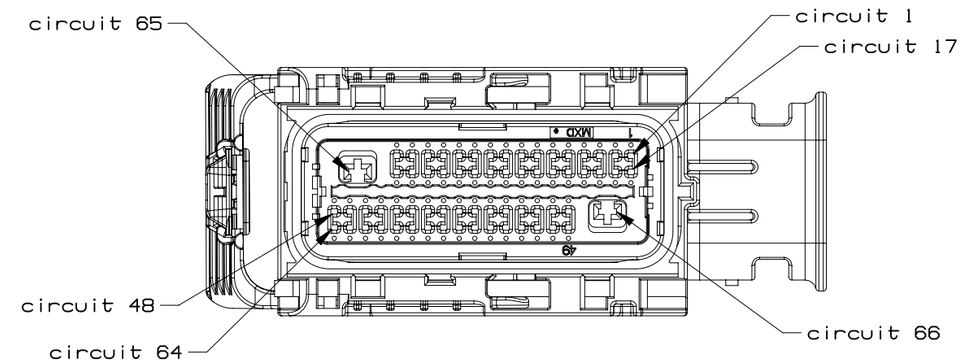

66 CKT HARNESS CONNECTOR ASSEMBLY
WIRE DRESS OPTION 0

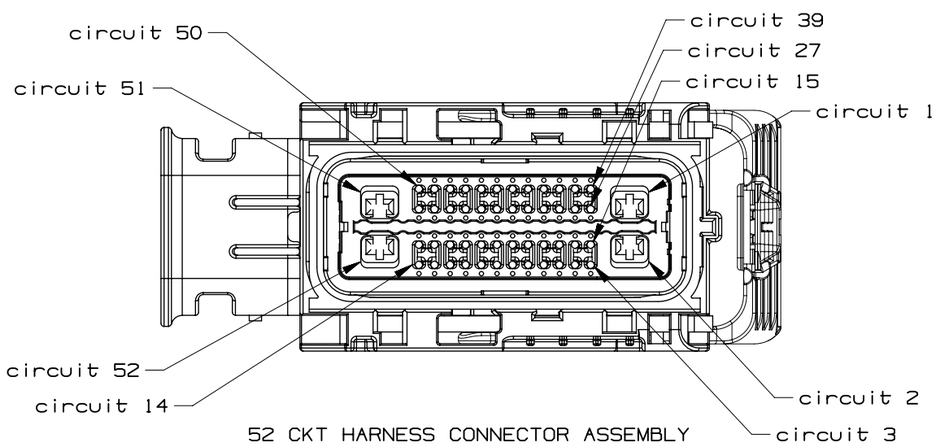

52 CKT HARNESS CONNECTOR ASSEMBLY
WIRE DRESS OPTION 9

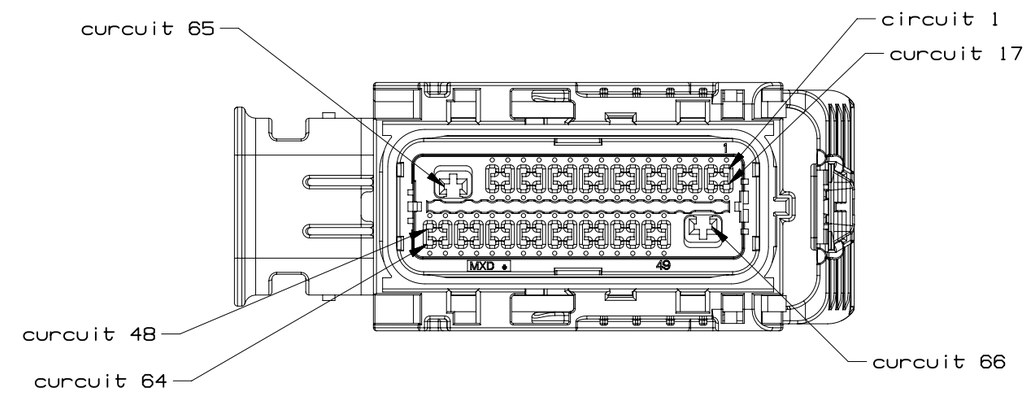

66 CKT HARNESS CONNECTOR ASSEMBLY
WIRE DRESS OPTION 9

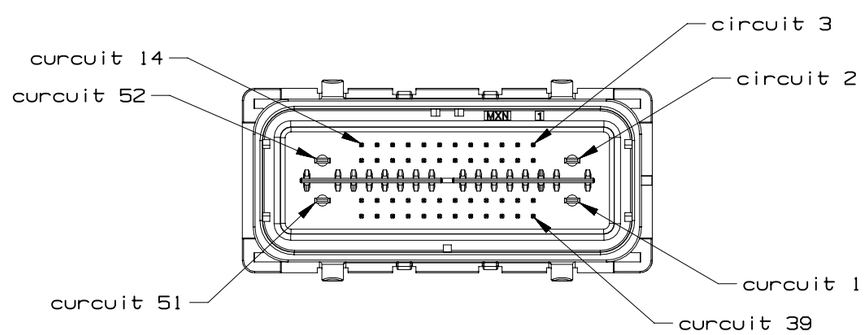

52 CKT COMPONENT CONNECTOR INTERFACE

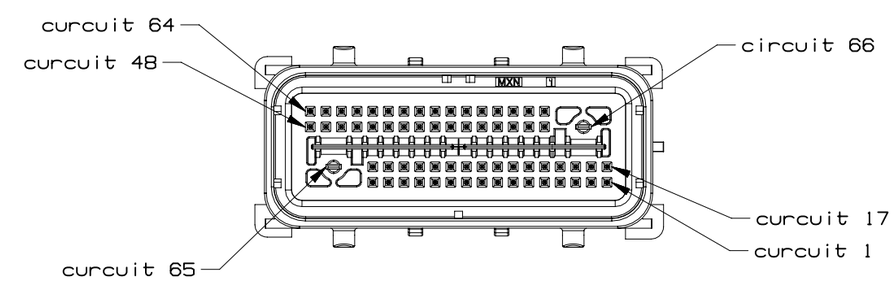

66 CKT COMPONENT CONNECTOR INTERFACE

	GM	PAGE TITLE CIRCUIT CONFIGURATIONS		DRAWING NUMBER 12672833	DWG STATUS ST: R	REV: 001	PDI:	PAGE NUMBER 13 OF 22

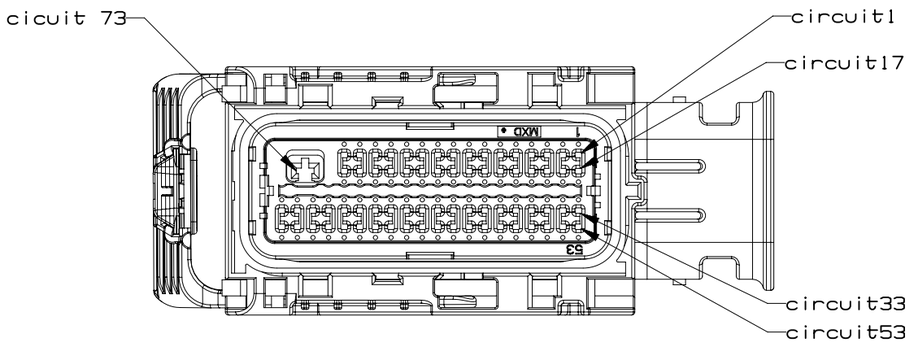

73 CKT HARNESS CONNECTOR ASSEMBLY
WIRE DRESS OPTION 0

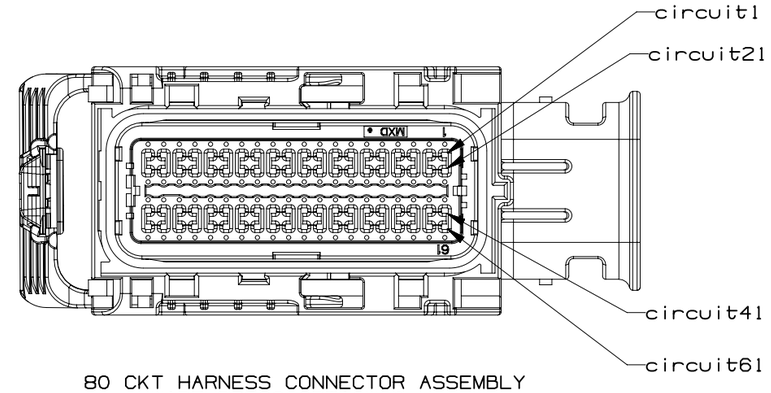

80 CKT HARNESS CONNECTOR ASSEMBLY
WIRE DRESS OPTION 0

INTERFACE SIDE SHOWN ON ALL VIEWS

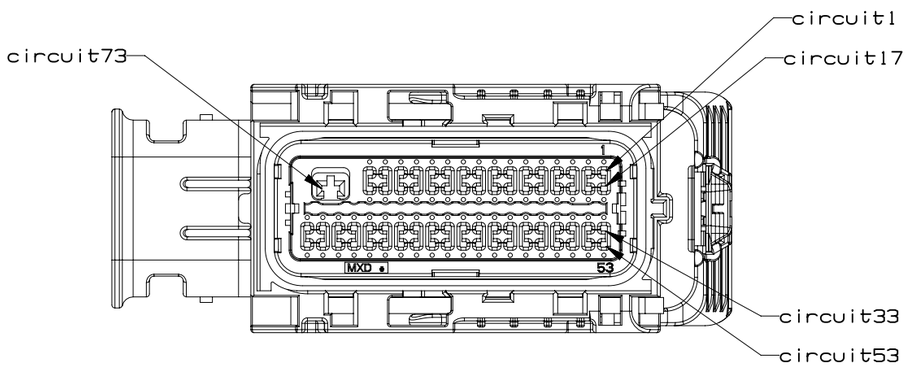

73 CKT HARNESS CONNECTOR ASSEMBLY
WIRE DRESS OPTION 9

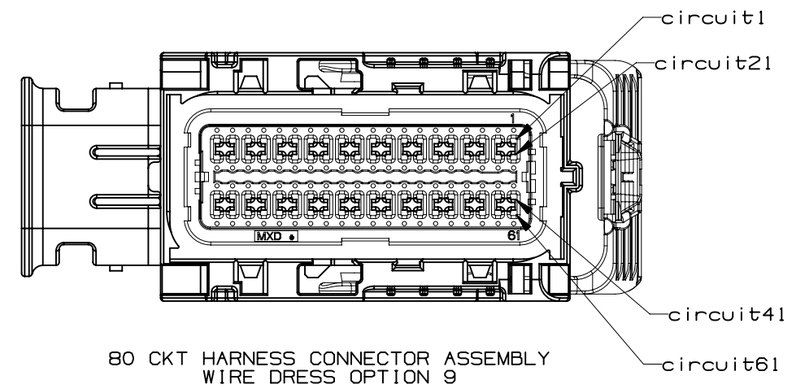

80 CKT HARNESS CONNECTOR ASSEMBLY
WIRE DRESS OPTION 9

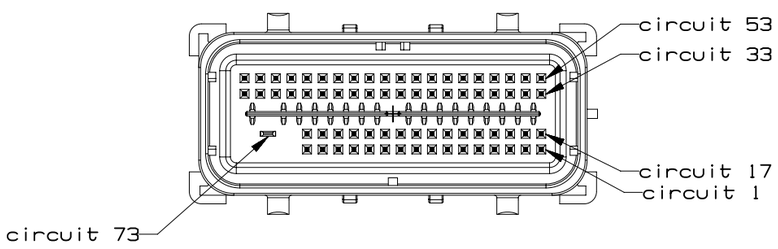

73 CKT COMPONENT CONNECTOR INTERFACE

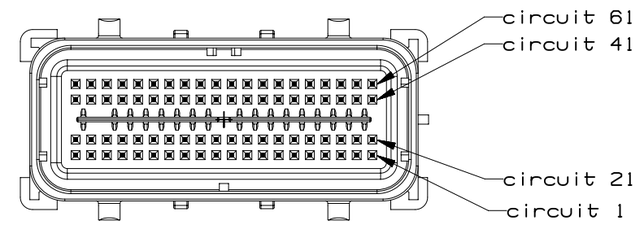

80 CKT COMPONENT CONNECTOR INTERFACE

GM	PAGE TITLE CIRCUIT CONFIGURATIONS		DRAWING NUMBER 12672833	DWG STATUS ST: R REV: 001 PDI:	PAGE NUMBER 14 OF 22	

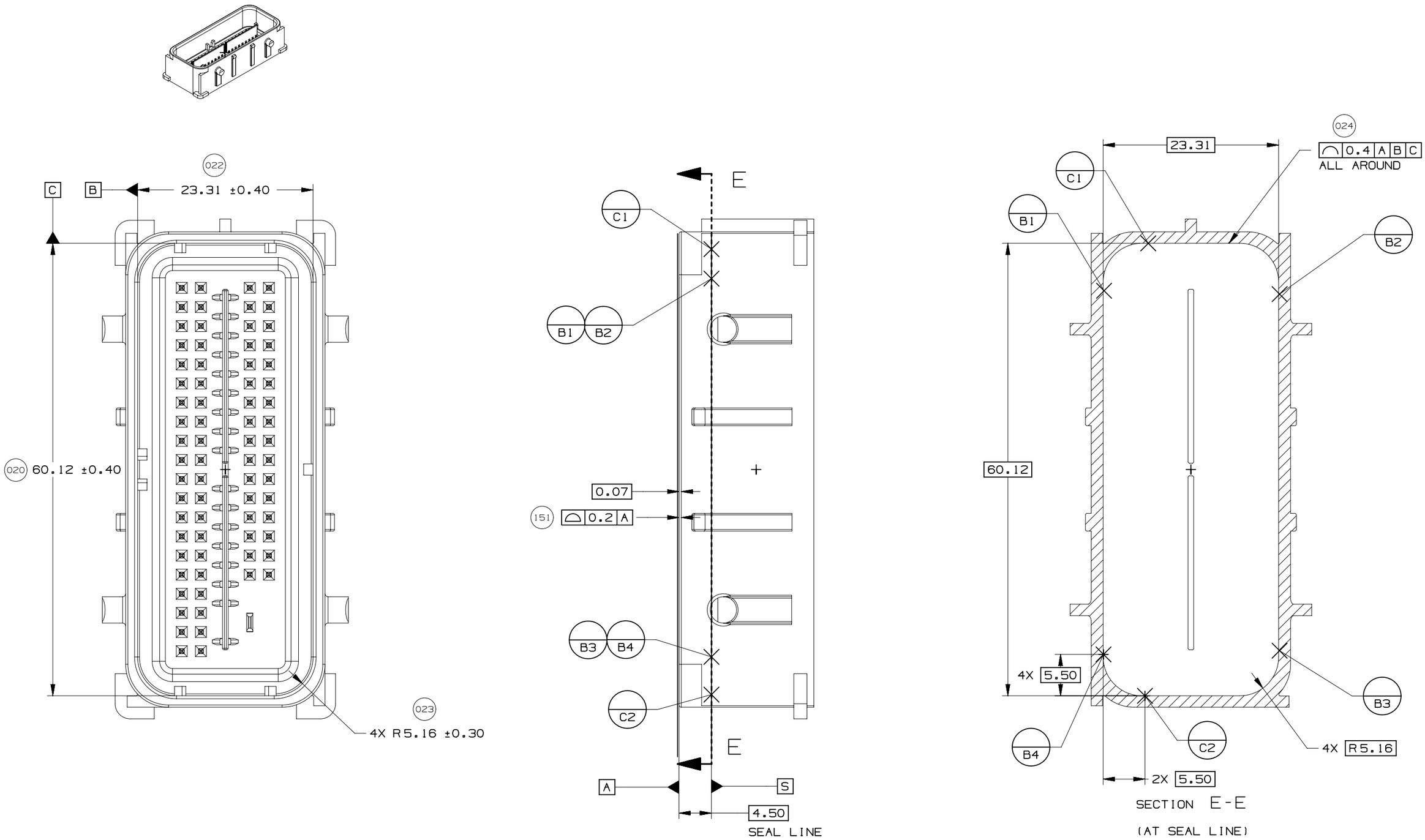

UNLESS SPECIFIED, TOLERANCE OF THE COMPONENT CONNECTOR INTERFACE TO BE 0.13 A B C

GM	PAGE TITLE COMPONENT CONNECTOR INTERFACE		DRAWING NUMBER 12672833	DWG STATUS ST: R	REV: 001	PDI:	PAGE NUMBER 15 OF 22

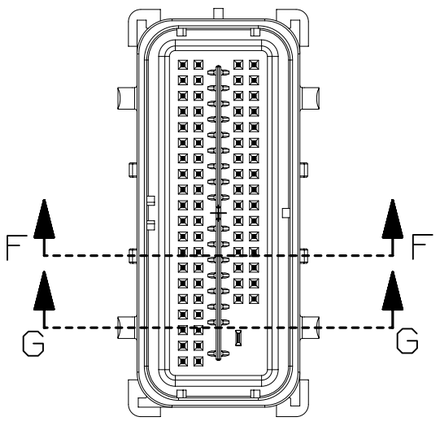

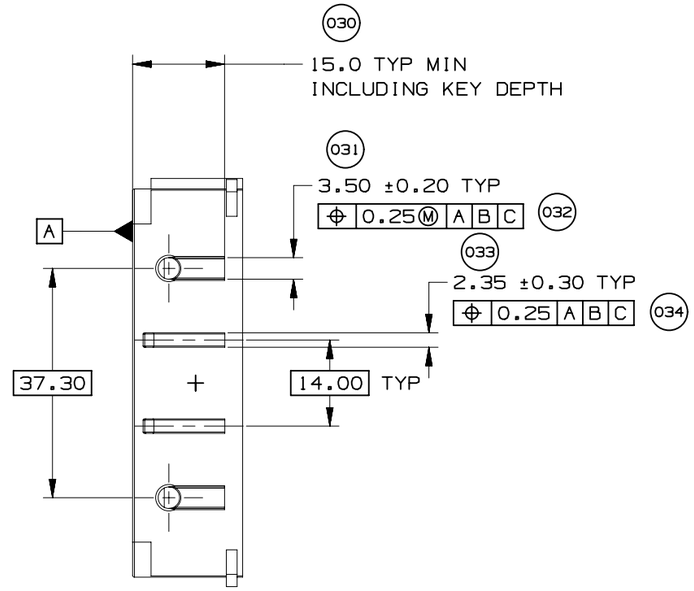

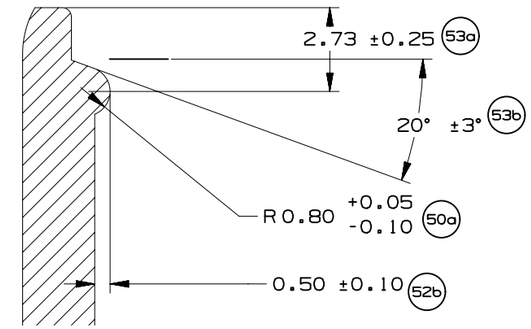

VIEW YY
SCALE 5:1

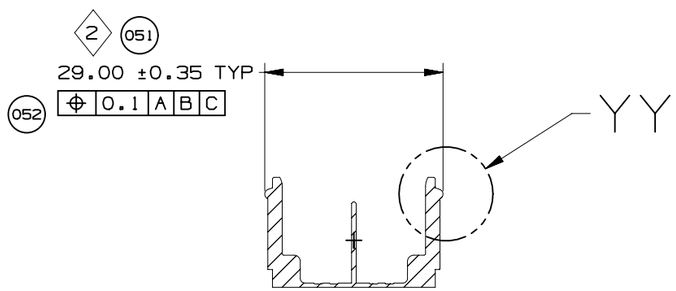

SECTION F-F
(RELEASE FEATURE)

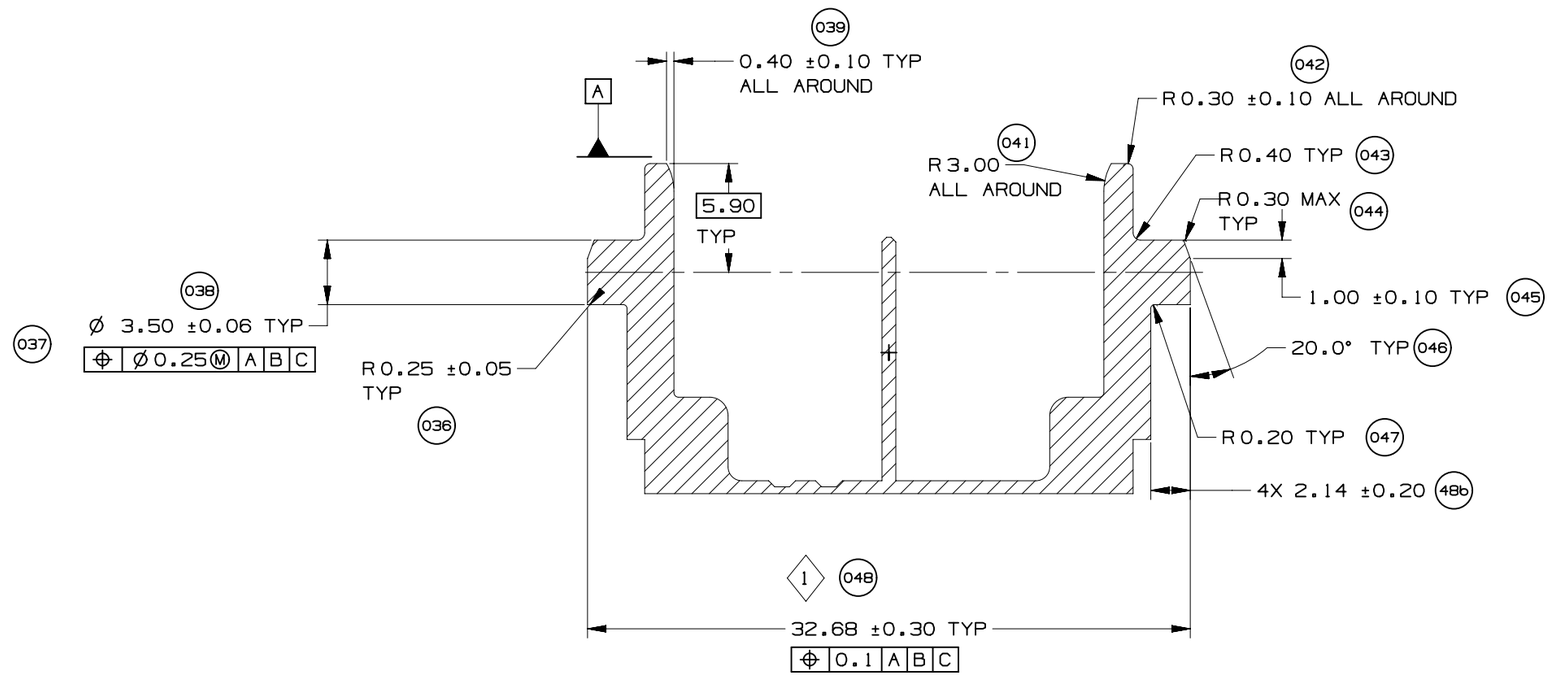

SECTION G-G
(CAM POST)

GM	PAGE TITLE COMPONENT CONNECTOR INTERFACE		DRAWING NUMBER 12672833	DWG STATUS			PAGE NUMBER
				ST	REV	PDI	
				R	001		16 OF 22

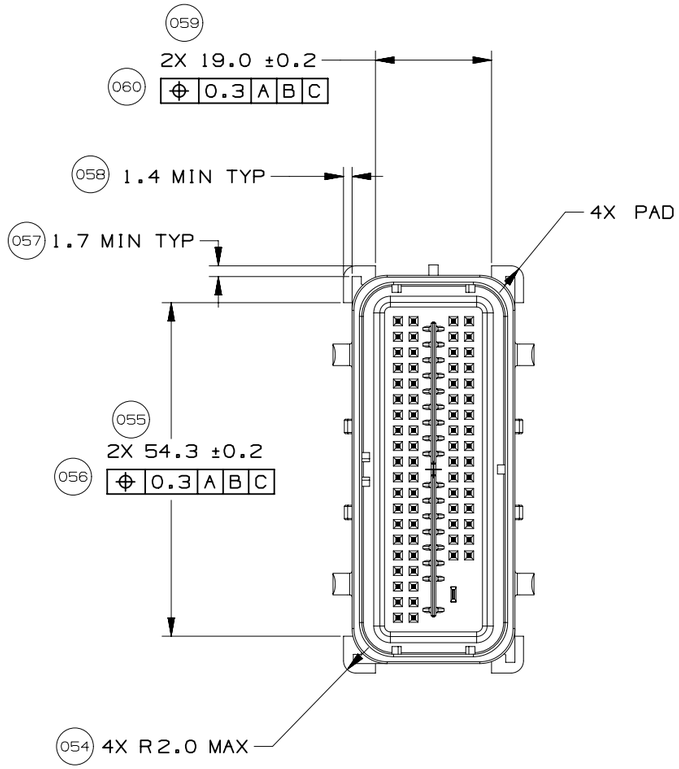

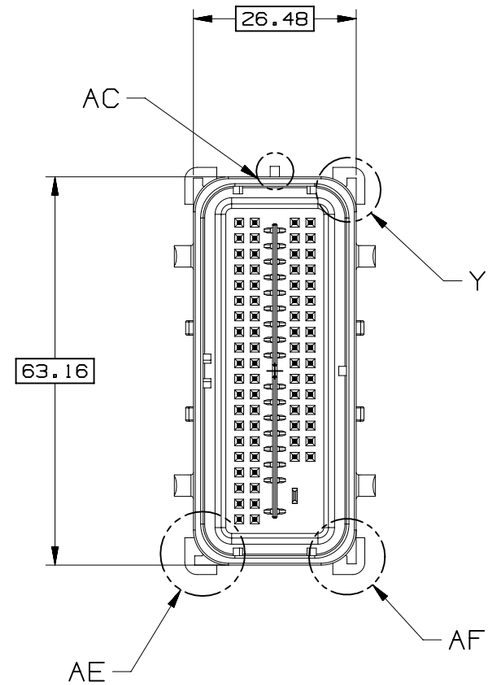

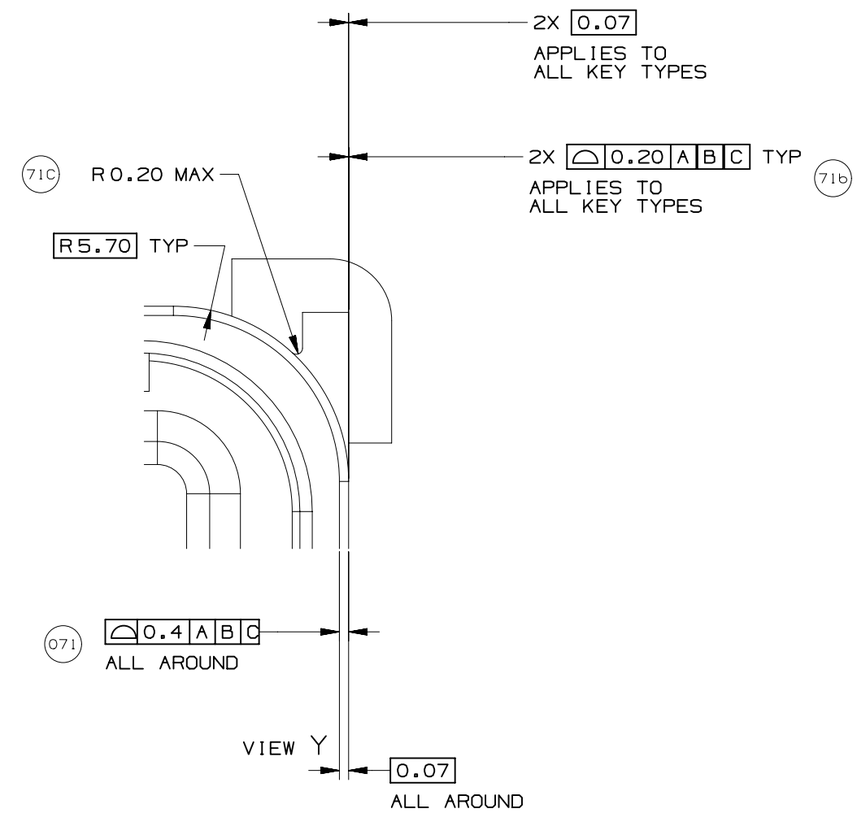

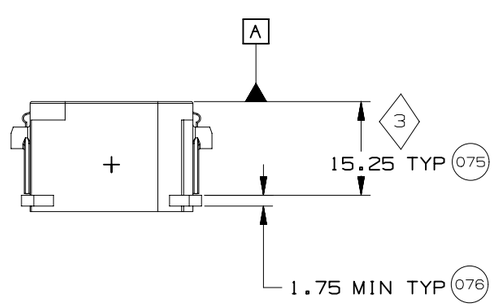

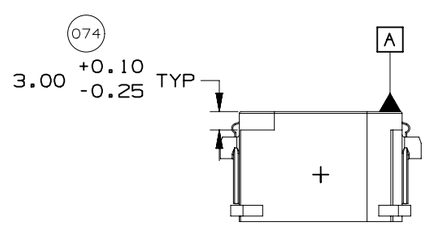

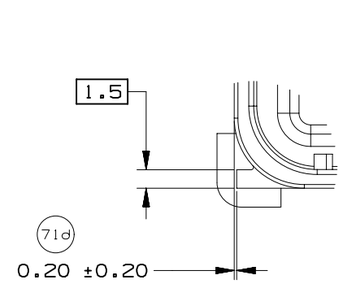

VIEW AE
KEY TYPE 2
SCALE 2:1

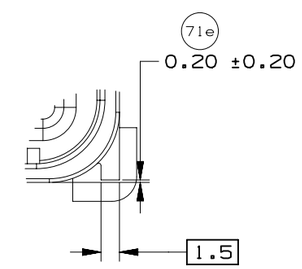

VIEW AF
KEY TYPE 1
SCALE 2:1

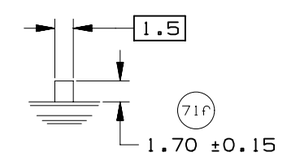

VIEW AC
KEY TYPE 3
SCALE 2:1

GM	PAGE TITLE COMPONENT CONNECTOR INTERFACE		DRAWING NUMBER 12672833	DWG STATUS ST: R REV: 001 PDI:	PAGE NUMBER 17 OF 22	

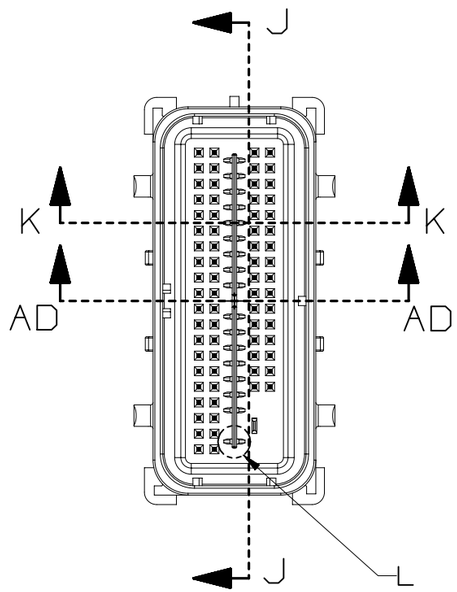

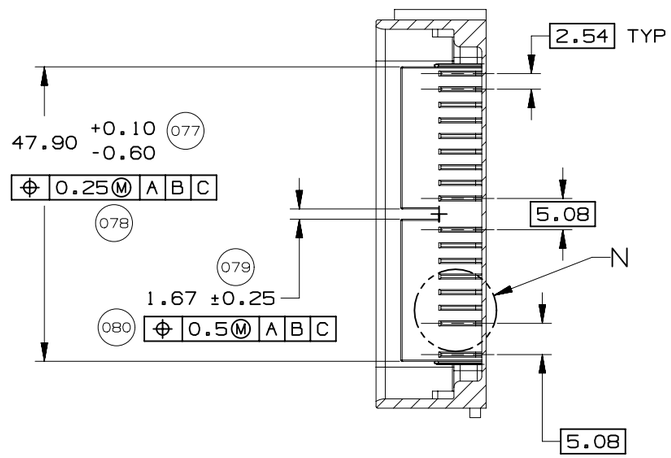

SECTION J-J

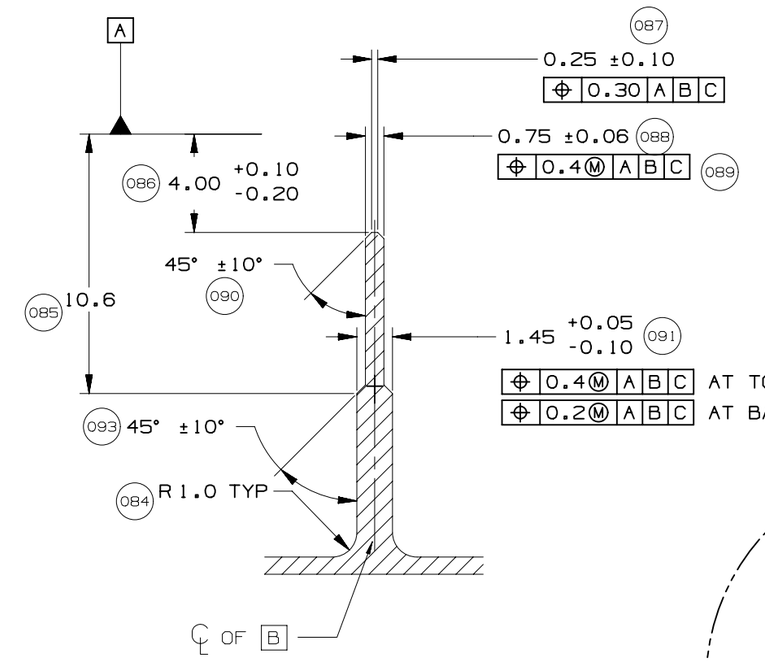

DETAIL M
TYPICAL
SCALE 4:1

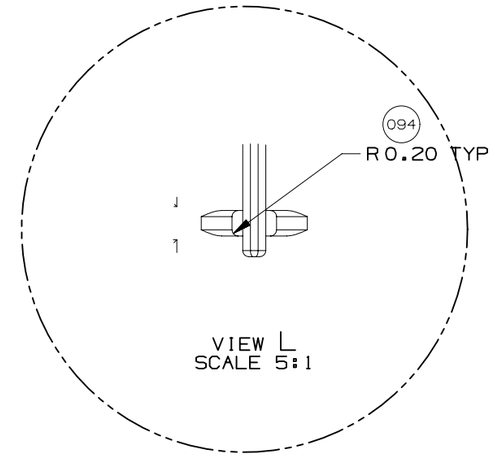

VIEW L
SCALE 5:1

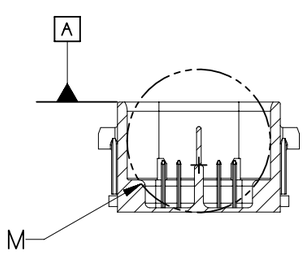

SECTION K-K

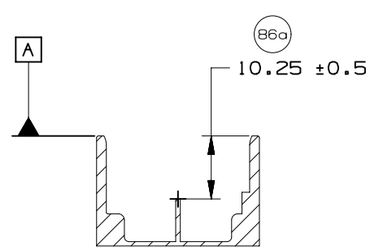

SECTION AD-AD

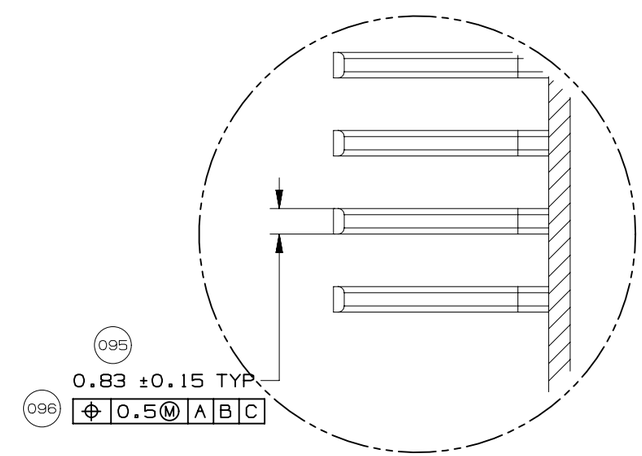

DETAIL N
SCALE 5:1

	GM	PAGE TITLE COMPONENT CONNECTOR INTERFACE		DRAWING NUMBER 12672833	DWG STATUS ST: R	REV: 001	PDI:	PAGE NUMBER 18 OF 22

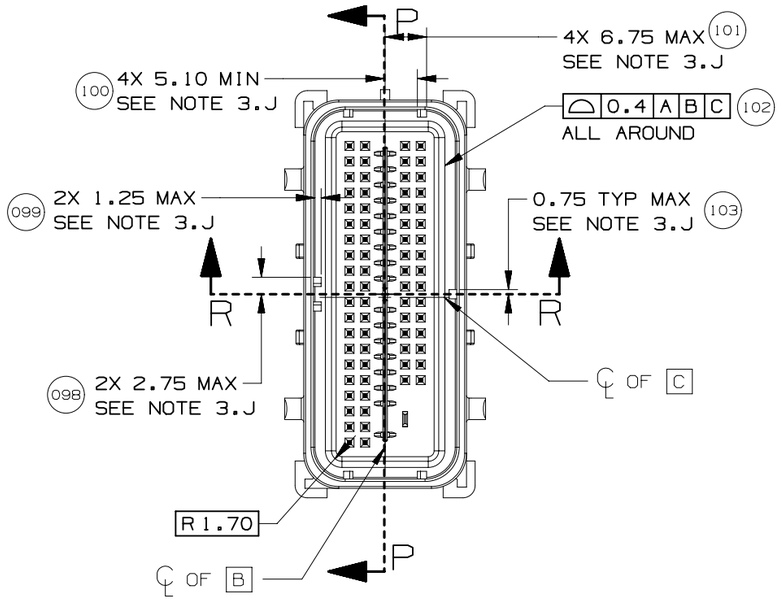

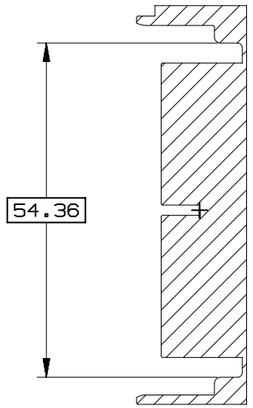

SECTION P-P

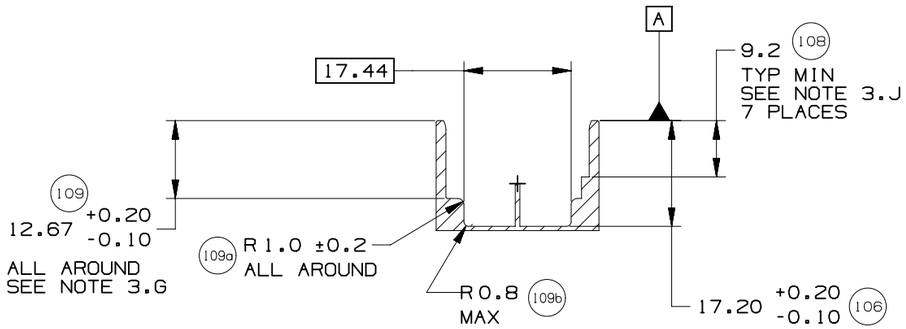

SECTION R-R

GM	PAGE TITLE COMPONENT CONNECTOR INTERFACE		DRAWING NUMBER 12672833	DWG STATUS			PAGE NUMBER
				ST	REV	PDI	
				R	001		19 OF 22

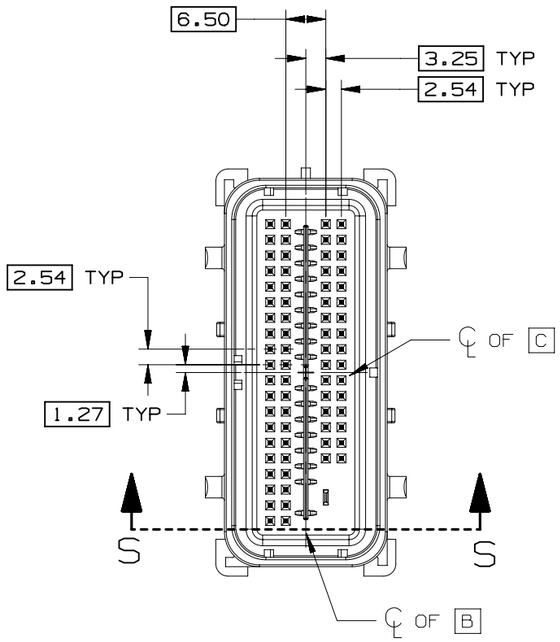

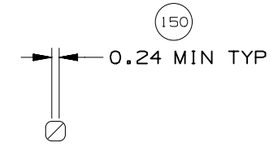

SECTION BB-BB

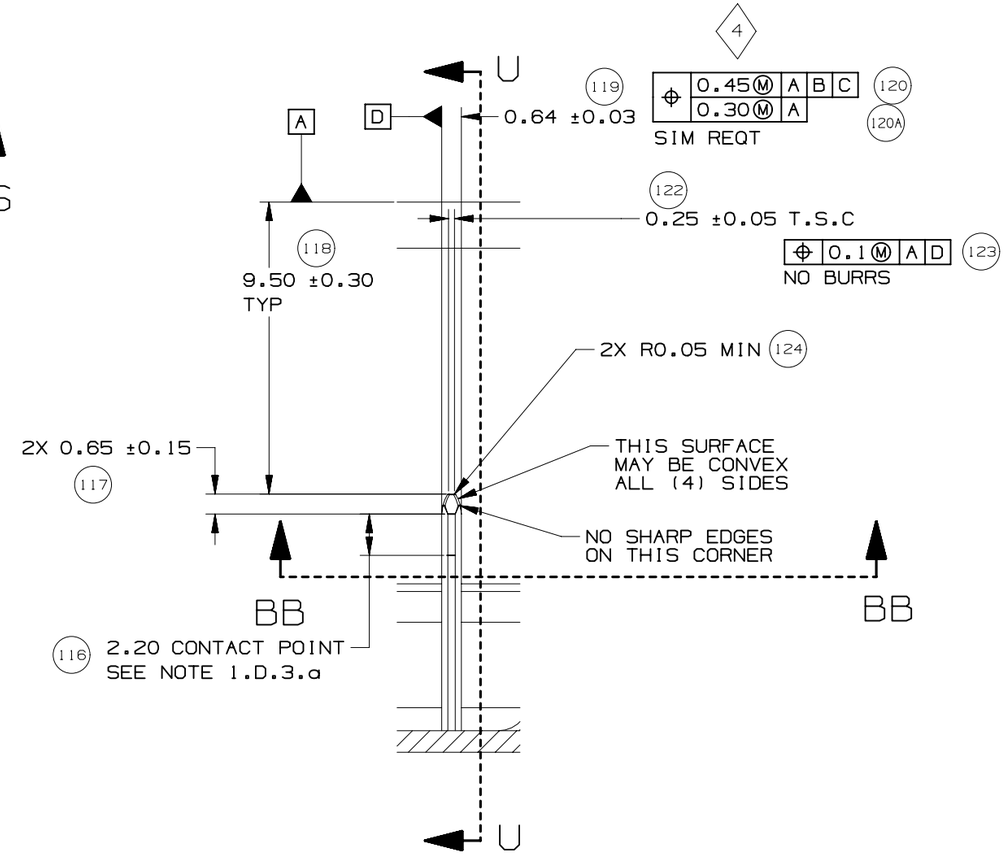

DETAIL T
TYPICAL
SCALE 5:1

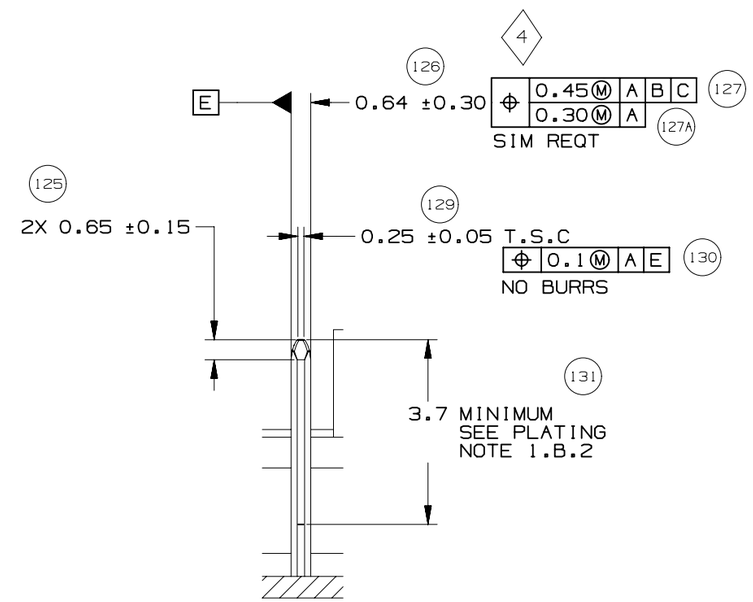

SECTION U-U
TYPICAL

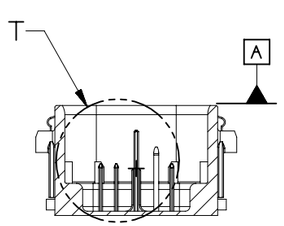

SECTION S-S

GM	PAGE TITLE COMPONENT CONNECTOR INTERFACE		DRAWING NUMBER 12672833	DWG STATUS ST: R REV: 001 PDI:	PAGE NUMBER 20 OF 22	

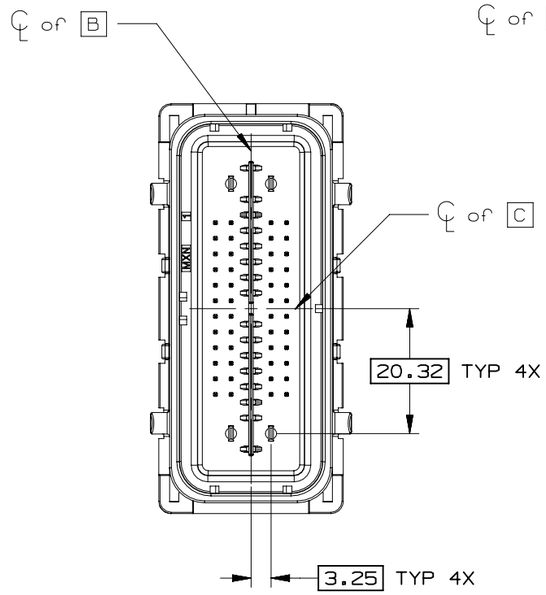

52 CKT COMPONENT
CONNECTOR INTERFACE

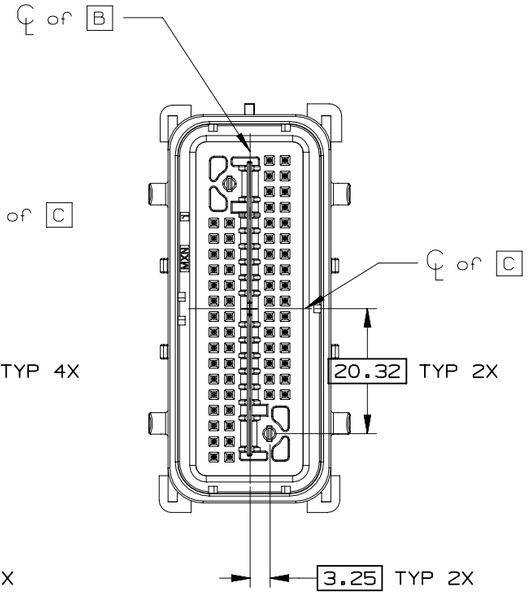

66 CKT COMPONENT
CONNECTOR INTERFACE

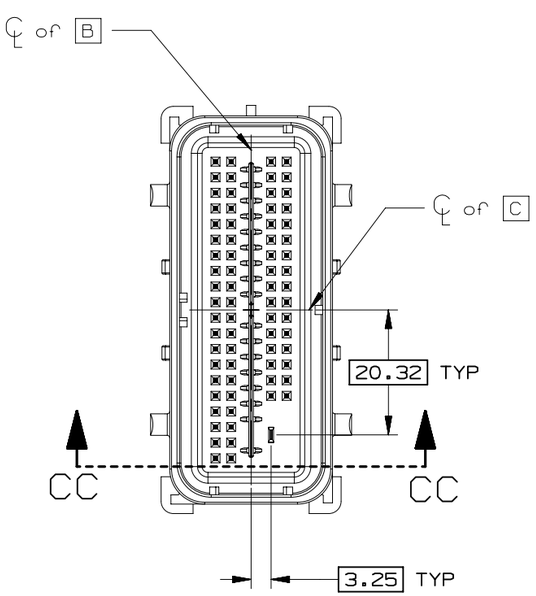

73 CKT COMPONENT
CONNECTOR INTERFACE

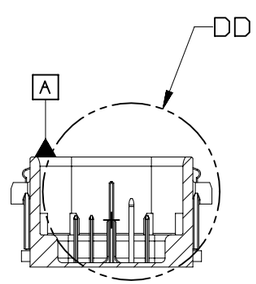

SECTION CC-CC

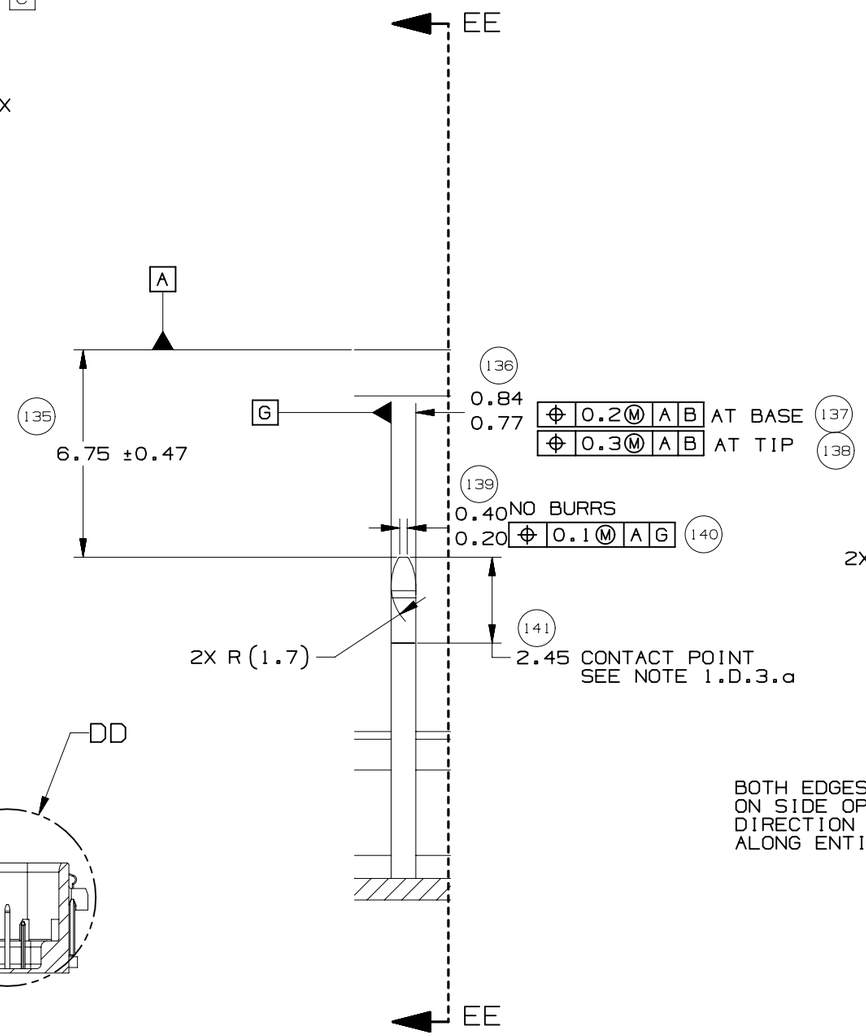

DETAIL DD
TYPICAL
SCALE 5:1

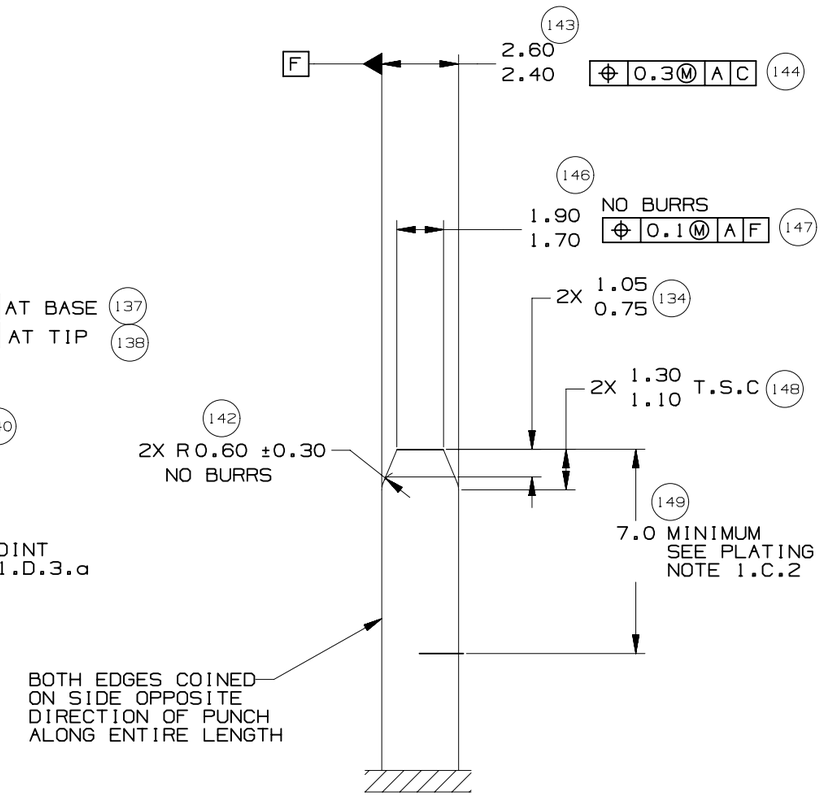

SECTION EE-EE
TYPICAL

GM	PAGE TITLE COMPONENT CONNECTOR INTERFACE		DRAWING NUMBER 12672833	DWG STATUS ST: R	REV: 001	PDI:	PAGE NUMBER 21 OF 22

MOLEX MX64 RECEPTACLE TERMINAL INFORMATION							
ITEM	MOLEX P/N	GM P/N	WIRE SIZE MM2	TYPE	PLATING	REEL WIND DIRECTION	COMMENTS
1	34736-0025		0.35	ISO	SILVER	LEFT	
2	34736-0026	12672850	0.35	ISO	SILVER	RIGHT	
3	34736-0027		0.5 / 0.75	ISO	SILVER	LEFT	
4	34736-0028	12672851	0.5 / 0.75	ISO	SILVER	RIGHT	

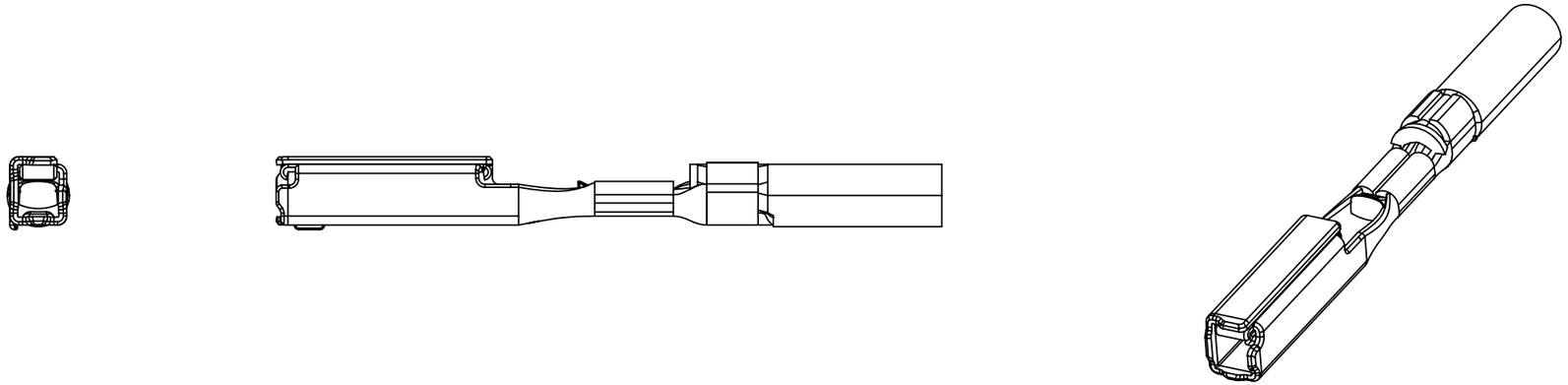

CAVITY PLUGS									
ITEM	MFG	MFG P/N	GM P/N RD	SIZE	COLOR	MFG DRAWING	PROD SPEC	APP SPEC	COMMENTS
1	MOLEX	34586-0001	12674820	0.64	NATURAL	SD-34586-001	PS-34566-0000	AS-34566-001	
2	YAZAKI	7158-3114-90	12674821	2.8	BLUE	7158-3114-90	YPES-11-04-062	YPES-15-299	

ITEM 1

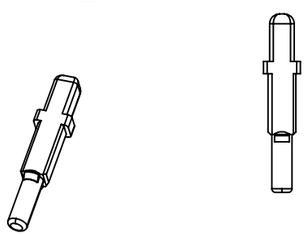

ITEM 2

GM	PAGE TITLE ADDITIONAL COMPONENTS REQUIRED		DRAWING NUMBER 12672833	DWG STATUS ST: R	REV: 001	PDI:	PAGE NUMBER 22 OF 22

molex

MX123 SEALED RCPT ASSY (66 Ckt)
BOM & PIN OUT SHEET

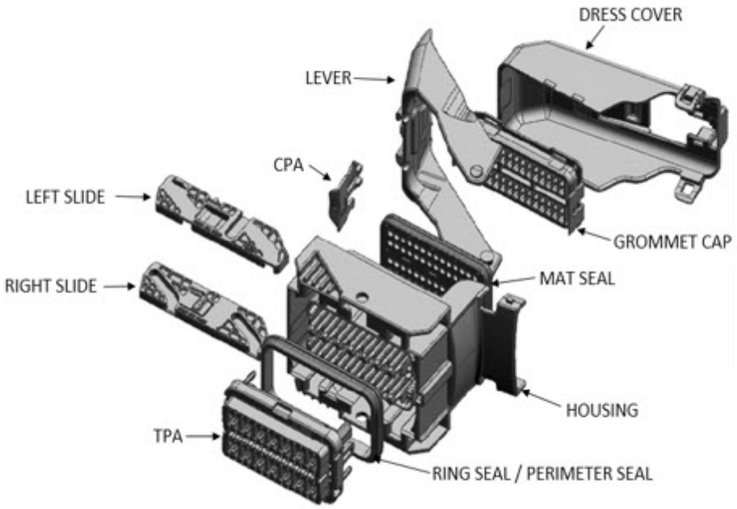

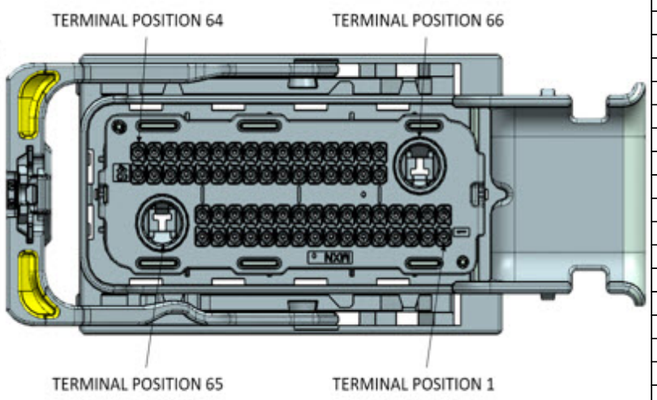

ABBREVIATION	DESCRIPTION	COLOR	MATERIAL
G-CAP-0-P	GROMMET CAP OPTION 0 PLUGGED	BLACK	SPS/PA, G.F 30%
G-CAP-0-O	GROMMET CAP OPTION 0 All OPEN	BLACK	SPS/PA, G.F 30%
G-CAP-9-P	GROMMET CAP OPTION 9 PLUGGED	BLACK	SPS/PA, G.F 30%
G-CAP-9-O	GROMMET CAP OPTION 9 All OPEN	BLACK	SPS/PA, G.F 30%
C-HSG-A0	CONNECTOR HOUSING KEY A - WDC OPT 0	BLACK	SPS/PA, G.F 30%
C-HSG-C0	CONNECTOR HOUSING KEY C- WDC OPT 0	BLACK	SPS/PA, G.F 30%
C-HSG-A9	CONNECTOR HOUSING KEY A- WDC OPT 9	BLACK	SPS/PA, G.F 30%
C-HSG-C9	CONNECTOR HOUSING KEY C - WDC OPT 9	BLACK	SPS/PA, G.F 30%
TPA-A0	TERMINAL POSITION ASSURANCE (TPA) OPTION 0	BLACK	SPS/PA, G.F 30%
TPA-C0	TERMINAL POSITION ASSURANCE (TPA) OPTION 0	BLUE	SPS/PA, G.F 30%
TPA-A9	TERMINAL POSITION ASSURANCE (TPA) OPTION 9	BLACK	SPS/PA, G.F 30%
TPA-C9	TERMINAL POSITION ASSURANCE (TPA) OPTION 9	BLUE	SPS/PA, G.F 30%
MAL	MATE ASSIST LEVER	BLACK	SPS/NYLON GF30
RS	SLIDE - RIGHT	BLACK	PBT W/PTFE, G.F. 30%
LS	SLIDE - LEFT	BLACK	PBT W/PTFE, G.F. 30%
CVR BLACK	DRESS COVER BLACK	BLACK	PBT, G.F. 30%
CVR GRAY	DRESS COVER GRAY	GRAY	PBT, G.F. 30%
CVR BLUE	DRESS COVER BLUE	BLUE	PBT, G.F. 30%
CVR BROWN	DRESS COVER BROWN	BROWN	PBT, G.F. 30%
CVR GREEN	DRESS COVER GREEN	GREEN	PBT, G.F. 30%
CVR NATURAL	DRESS COVER NATURAL	NATURAL	PBT, G.F. 30%
CVR YELLOW	DRESS COVER YELLOW	YELLOW	PBT, G.F. 30%
CPA	CONNECTOR POSITION ASSURANCE (CPA)	RED	PPE/PA 10% GF
MSEAL	MAT SEAL	RUST RED	INHERENTLY LUBRICATED SILICONE RUBBER
RSEAL	RING SEAL	RUST RED	INHERENTLY LUBRICATED SILICONE RUBBER

FOR ADDITIONAL INFOMRATION SEE SD-34566-001

ASSEMBLY DESCRIPTION	ASSEMBLY PART NUMBER	CONNECTOR HOUSING	GROMMET CAP	TPA	RIGHT SLIDE	LEFT SLIDE	MATE ASSIST LEVER	CPA	MAT SEAL	RING SEAL	BLOCKED TERMINALS CAVITY WITH A NUMBER INDICATES BLOCKED TERMINAL POSITION CAVITY WITHOUT A NUMBER INDICATES OPEN TERMINAL POSITION	STATUS	COMMENTS	INTEGRAL COMPONENTS SOLD SEPARATELY DRESS COVER
MX123 CONN ASSY 66 CKT BLK OPT0 KEY A/66	348220013	C-HSG-A0	G-CAP-0-P	TPA-A0	RS	LS	MAL	CPA	MSEAL	RSEAL	- -	SALEABLE		345650003
MX123 CONN ASSY 66 CKT BLK OPT9 KEY A/66	348220023	C-HSG-A9	G-CAP-9-P	TPA-A9	RS	LS	MAL	CPA	MSEAL	RSEAL	- -	SALEABLE		345650003
MX123 CONN ASSY 66 CKT BLU OPT0 KEY C/66	348220033	C-HSG-C0	G-CAP-0-P	TPA-C0	RS	LS	MAL	CPA	MSEAL	RSEAL	- -	SALEABLE		345650003
MX123 CONN ASSY 66 CKT BLU OPT9 KEY C/66	348220043	C-HSG-C9	G-CAP-9-P	TPA-C9	RS	LS	MAL	CPA	MSEAL	RSEAL	- -	SALEABLE		345650003
MX123 CONN ASSY 66 CKT BLK OPT0 KEY A/32	348220073	C-HSG-A0	G-CAP-0-P	TPA-A0	RS	LS	MAL	CPA	MSEAL	RSEAL	64 - - - - - 58 57 56 55 - - 52 - 50 - 48 - 46 45 44 43 42 41 40 39 - - 36 - 34 - 32 31 30 29 - 27 26 - 24 23 - - - - - - 16 - - - 12 11 10 9 - - 6 5 4 - - -	SALEABLE		345650003
MX123 CONN ASSY 66 CKT BLK OPT9 KEY A/33	348220083	C-HSG-A9	G-CAP-9-P	TPA-A9	RS	LS	MAL	CPA	MSEAL	RSEAL	64 - - - - - 58 57 56 55 - - 52 - 50 - 48 - 46 45 44 43 42 41 40 - - - 36 - 34 - 32 31 30 29 - 27 26 - 24 23 - - - - - - 16 - - - 12 11 10 9 - - 6 5 4 - - -	SALEABLE		345650003
MX123 CONN ASSY 66 CKT BLK OPT9 KEY A/32	348220093	C-HSG-A9	G-CAP-9-P	TPA-A9	RS	LS	MAL	CPA	MSEAL	RSEAL	64 - - - - - 58 57 56 55 - - 52 - 50 - 48 - 46 45 44 43 42 41 40 39 - - 36 - 34 - 32 31 30 29 - 27 26 - 24 23 - - - - - - 16 - - - 12 11 10 9 - - 6 5 4 - - -	SALEABLE		345650003

molex

MX123 SEALED RCPT ASSY (66 Ckt)
BOM & PIN OUT SHEET

ASSEMBLY DESCRIPTION	ASSEMBLY PART NUMBER	CONNECTOR HOUSING	GROMMET CAP	TPA	RIGHT SLIDE	LEFT SLIDE	MATE ASSIST LEVER	CPA	MAT SEAL	RING SEAL	BLOCKED TERMINALS CAVITY WITH A NUMBER INDICATES BLOCKED TERMINAL POSITION CAVITY WITHOUT A NUMBER INDICATES OPEN TERMINAL POSITION	STATUS	COMMENTS	INTEGRAL COMPONENTS SOLD SEPARATELY DRESS COVER
MX123 CONN ASSY 66 CKT BLK OPT0 KEY A/31	348220103	C-HSG-A0	G-CAP-0-P	TPA-A0	RS	LS	MAL	CPA	MSEAL	RSEAL	64 - 62 61 60 59 - - - - - - 52 - 50 - 48 - 46 45 44 43 42 - - 39 - - 36 - 34 - - 32 31 30 29 - - - - 24 23 - 21 20 19 - - 16 15 - 13 12 11 10 9 8 - 6 5 - - - -	SALEABLE		345650003
MX123 CONN ASSY 66 CKT BLK OPT9 KEY A/15	348220113	C-HSG-A9	G-CAP-9-P	TPA-A9	RS	LS	MAL	CPA	MSEAL	RSEAL	64 63 62 - - - - 57 - - 54 53 52 - 50 - 48 47 46 45 44 43 - 41 40 39 38 37 36 35 34 33 - 32 31 30 29 28 27 26 25 24 23 22 21 20 19 18 - 16 15 14 13 12 11 - 9 - 7 6 5 4 3 - 1	SALEABLE		345650003
MX123 CONN ASSY 66 CKT BLU OPT9 KEY C/25	348220123	C-HSG-C9	G-CAP-9-P	TPA-C9	RS	LS	MAL	CPA	MSEAL	RSEAL	- - - - - 59 58 57 56 - - 53 52 51 50 49 - - - - 44 43 - 41 40 - 38 37 - - 34 33 - 32 - 30 29 28 - 26 25 24 23 22 21 20 - 18 17 - 15 14 13 12 11 - 9 8 7 - 5 - 3 2 -	SALEABLE		345650003
MX123 CONN ASSY 66 CKT BLU OPT0 KEY C/25	348220133	C-HSG-C0	G-CAP-0-P	TPA-C0	RS	LS	MAL	CPA	MSEAL	RSEAL	- - - - - 59 58 57 56 - - 53 52 51 50 49 - - - - 44 43 - 41 40 - 38 37 - - 34 33 - 32 - 30 29 28 - 26 25 24 23 22 21 20 - 18 17 - 15 14 13 12 11 - 9 8 7 - 5 - 3 2 -	SALEABLE		345650003
MX123 CONN ASSY 66 CKT BLK OPT0 KEY A/17	348220143	C-HSG-A0	G-CAP-0-P	TPA-A0	RS	LS	MAL	CPA	MSEAL	RSEAL	64 63 62 - - - - 57 - - 54 53 52 - 50 - 48 47 46 45 44 43 - 41 40 39 38 37 36 35 34 33 - - 31 30 29 28 27 26 25 24 23 22 21 20 19 18 - - 15 14 13 12 11 - 9 - 7 6 5 4 3 - 1	SALEABLE		345650003
MX123 CONN ASSY 66 CKT BLK OPT0 KEY A/28	348220163	C-HSG-A0	G-CAP-0-P	TPA-A0	RS	LS	MAL	CPA	MSEAL	RSEAL	- - 62 61 60 59 58 57 56 55 - - 52 - 50 - 48 47 46 45 44 43 42 41 40 39 - - 36 - 34 - - 32 31 30 29 - 27 26 25 24 - 22 - - - - - 16 - - - 12 11 10 9 - - 6 5 - - - -	SALEABLE		345650003
MX123 CONN ASSY 66 CKT BLK OPT9 KEY A/36	348220173	C-HSG-A9	G-CAP-9-P	TPA-A9	RS	LS	MAL	CPA	MSEAL	RSEAL	- 63 62 61 60 59 - - - - - 53 - 51 - 49 - 47 - - - - - - - 39 38 37 - 35 - 33 - - - - 28 - - 25 - - 22 21 20 19 18 17 - 15 14 13 - - - - 8 7 - - - 3 2 1	SALEABLE		345650003
MX123 CONN ASSY 66 CKT BLK OPT0 KEY A/33	348220183	C-HSG-A0	G-CAP-0-P	TPA-A0	RS	LS	MAL	CPA	MSEAL	RSEAL	- - - - - - 58 57 56 55 - - 52 - 50 - 48 47 46 45 44 43 42 41 40 39 - - 36 - 34 - - 32 31 30 29 28 27 26 25 - - - - - - - - 16 - - - 12 11 10 9 - - 6 5 - - - -	SALEABLE		345650003
MX123 CONN ASSY 66 CKT BLK OPT0 KEY A/29	348220193	C-HSG-A0	G-CAP-0-P	TPA-A0	RS	LS	MAL	CPA	MSEAL	RSEAL	- - 62 61 60 59 58 57 56 55 - - 52 - 50 - 48 47 46 45 44 43 42 41 40 39 - - 36 - 34 - - 32 31 30 29 - 27 26 25 - - 22 - - - - - 16 - - - 12 11 10 9 - - 6 5 - - - -	SALEABLE		345650003
MX123 CONN ASSY 66 CKT BLK OPT0 KEY A/34	348220203	C-HSG-A0	G-CAP-0-P	TPA-A0	RS	LS	MAL	CPA	MSEAL	RSEAL	- - - - - - 58 57 56 55 - - 52 - 50 - 48 47 46 45 44 43 42 41 40 39 - - 36 - 34 - - 32 - 30 29 - 27 26 25 - - - - - - - - 16 - - - 12 11 10 9 - - 6 5 - 3 - -	SALEABLE		345650003
MX123 CONN ASSY 66 CKT BLK OPT0 KEY A/34	348220213	C-HSG-A0	G-CAP-0-P	TPA-A0	RS	LS	MAL	CPA	MSEAL	RSEAL	- - - - - - 58 57 56 55 - - 52 - 50 - 48 47 46 45 44 43 42 41 40 39 - - 36 - 34 - - 32 - 30 29 28 27 26 25 - - - - - - - - 16 - - - 12 11 10 9 - - 6 5 - - - -	SALEABLE		345650003
MX123 CONN ASSY 66 CKT BLK OPT0 KEY A/35	348220223	C-HSG-A0	G-CAP-0-P	TPA-A0	RS	LS	MAL	CPA	MSEAL	RSEAL	- - - - - - 58 57 56 55 - - 52 - 50 - 48 47 46 45 44 43 42 41 40 39 - - 36 - 34 - - 32 - 30 29 - 27 26 25 - - - - - - - - 16 - - - 12 11 10 9 - - 6 5 - - - -	SALEABLE		345650003

molex

MX123 SEALED RCPT ASSY (66 Ckt)
BOM & PIN OUT SHEET

ASSEMBLY DESCRIPTION	ASSEMBLY PART NUMBER	CONNECTOR HOUSING	GROMMET CAP	TPA	RIGHT SLIDE	LEFT SLIDE	MATE ASSIST LEVER	CPA	MAT SEAL	RING SEAL	BLOCKED TERMINALS CAVITY WITH A NUMBER INDICATES BLOCKED TERMINAL POSITION CAVITY WITHOUT A NUMBER INDICATES OPEN TERMINAL POSITION	STATUS	COMMENTS	INTEGRAL COMPONENTS SOLD SEPARATELY DRESS COVER
MX123 CONN ASSY 66 CKT BLK OPT9 KEY A/36	348220243	C-HSG-A9	G-CAP-9-P	TPA-A9	RS	LS	MAL	CPA	MSEAL	RSEAL	- - - - - - 58 57 56 55 - - 52 - 50 - 48 - 46 45 44 43 42 41 40 39 - - 36 - 34 - - 32 31 30 29 - 27 26 - - 23 - - - - - - - 16 - - - - 11 10 9 - - 6 5 - - - -	SALEABLE		345650003
MX123 CONN ASSY 66 CKT BLK OPT0 KEY A/34	348220253	C-HSG-A0	G-CAP-0-P	TPA-A0	RS	LS	MAL	CPA	MSEAL	RSEAL	64 - - - - - 58 57 56 55 - - 52 - 50 - 48 47 46 45 44 43 42 41 40 39 - - 36 - 34 - - 32 - 30 29 - 27 26 25 - - - - - - - - - 16 - - - 12 11 10 9 - - 6 5 - - - -	SALEABLE		345650003
MX123 CONN ASSY 66 CKT BLU OPT9 KEY C/55	348220263	C-HSG-C9	G-CAP-9-P	TPA-C9	RS	LS	MAL	CPA	MSEAL	RSEAL	- - - 61 - - 58 - - - - - - - - - - - - - 44 43 - 41 40 - 38 - - - - - - - 31 - - - - - - - - - 20 - - - - - - - - - - - - - - 5 4 - - -	SALEABLE		345650003
MX123 CONN ASSY 66 CKT BLK OPT9 KEY A/29	348220273	C-HSG-A9	G-CAP-9-P	TPA-A9	RS	LS	MAL	CPA	MSEAL	RSEAL	- - 62 61 60 59 58 57 56 55 - - 52 - 50 - 48 - 46 45 44 43 42 41 40 39 - - 36 - 34 - - 32 31 30 29 - 27 26 25 24 23 - 21 - - - - - 16 - - - - 11 10 9 - - 6 5 - - - -	SALEABLE		345650003
MX123 CONN ASSY 66 CKT BLK OPT0 KEY A/16	348220283	C-HSG-A0	G-CAP-0-P	TPA-A0	RS	LS	MAL	CPA	MSEAL	RSEAL	64 63 62 - - - - 57 - - 54 53 52 - 50 - 48 47 46 45 44 43 - 41 40 39 38 37 36 35 34 33 - 31 30 29 28 27 26 25 24 23 22 21 20 19 18 - - 15 14 13 12 11 10 9 - 7 6 5 4 3 - 1	SALEABLE		345650003
MX123 CONN ASSY 66 CKT BLK OPT0 KEY A/29	348220293	C-HSG-A0	G-CAP-0-P	TPA-A0	RS	LS	MAL	CPA	MSEAL	RSEAL	- - 62 61 60 59 58 57 56 55 - - 52 - 50 - 48 - 46 45 44 43 42 41 40 39 - - 36 - 34 - - 32 31 30 29 - 27 26 25 24 23 - 21 - - - - - 16 - - - - 11 10 9 - - 6 5 - - - -	SALEABLE		345650003
MX123 CONN ASSY 66 CKT BLK OPT0 KEY A/2	348220303	C-HSG-A0	G-CAP-0-P	TPA-A0	RS	LS	MAL	CPA	MSEAL	RSEAL	64 63 62 61 60 59 58 57 56 55 54 53 52 51 50 49 48 47 46 45 44 43 42 41 40 39 38 37 36 35 34 33 - 32 31 30 29 28 27 26 25 24 23 22 21 20 19 18 17 - 16 15 14 13 12 11 10 9 8 7 6 5 4 3 2 1	SALEABLE		345650003
MX123 CONN ASSY 66 CKT BLK OPT0 KEY A/34	348220313	C-HSG-A0	G-CAP-0-P	TPA-A0	RS	LS	MAL	CPA	MSEAL	RSEAL	64 - - - - - 58 57 56 55 - - 52 51 50 - 48 47 46 45 44 43 42 41 40 39 - - 36 - 34 - - 32 - 30 29 - 27 26 25 - - - - - - - - - - - - 12 11 10 9 - - 6 5 - - - -	SALEABLE		345650003
MX123 CONN ASSY 66 CKT BLK OPT9 KEY A/38	348220323	C-HSG-A9	G-CAP-9-P	TPA-A9	RS	LS	MAL	CPA	MSEAL	RSEAL	64 63 - - - - - - - - 54 53 - 51 - 49 - - - - - - - - - - 38 37 - 35 - 33 - - - - 28 - - - 24 - 22 - 20 19 18 17 - 16 15 14 13 12 - - - 8 7 - - 4 3 2 1	SALEABLE		345650003
MX123 CONN ASSY 66 CKT BLK OPT0 KEY A/32	348220333	C-HSG-A0	G-CAP-0-P	TPA-A0	RS	LS	MAL	CPA	MSEAL	RSEAL	64 63 62 61 60 59 - - - - 54 53 - 51 - 49 - 47 - - - - - - - - 38 37 - 35 - 33 - - - - 28 - - 25 24 - 22 21 20 19 18 17 - 15 14 13 12 - - - 8 7 - - 4 3 2 1	SALEABLE		345650003
MX123 CONN ASSY 66 CKT BLK OPT0 KEY A/12	348220343	C-HSG-A0	G-CAP-0-P	TPA-A0	RS	LS	MAL	CPA	MSEAL	RSEAL	64 63 62 - 60 59 - 57 56 55 54 53 52 51 50 49 48 47 46 45 - - 42 - - 39 - 37 36 35 34 33 - 32 - 30 29 28 27 26 25 24 23 22 21 20 19 18 17 - 16 15 14 13 12 11 10 9 8 7 6 - - 3 2 1	SALEABLE		345650003
MX123 CONN ASSY 66 CKT BLK OPT0 KEY A/33	348220353	C-HSG-A0	G-CAP-0-P	TPA-A0	RS	LS	MAL	CPA	MSEAL	RSEAL	- 63 62 61 60 59 - - - - 54 53 - 51 - 49 - - - - - - - - - - 38 37 - 35 - 33 - 31 - - 28 - - 25 24 23 22 21 20 19 18 17 - 15 14 13 - - - - 8 7 - - 4 3 2 1	SALEABLE		345650003

molex

MX123 SEALED RCPT ASSY (66 Ckt)
BOM & PIN OUT SHEET

ASSEMBLY DESCRIPTION	ASSEMBLY PART NUMBER	CONNECTOR HOUSING	GROMMET CAP	TPA	RIGHT SLIDE	LEFT SLIDE	MATE ASSIST LEVER	CPA	MAT SEAL	RING SEAL	BLOCKED TERMINALS CAVITY WITH A NUMBER INDICATES BLOCKED TERMINAL POSITION CAVITY WITHOUT A NUMBER INDICATES OPEN TERMINAL POSITION	STATUS	COMMENTS	INTEGRAL COMPONENTS SOLD SEPARATELY DRESS COVER
MX123 CONN ASSY 66 CKT BLU OPT9 KEY C/13	348220363	C-HSG-C9	G-CAP-9-P	TPA-C9	RS	LS	MAL	CPA	MSEAL	RSEAL	64 63 62 - 60 59 - 57 56 55 54 53 52 51 50 49 - 48 47 46 45 - - 42 - - 39 - 37 36 35 34 33 - 32 - 30 29 28 27 26 25 24 23 22 21 - 19 18 17 16 15 14 13 12 11 10 9 8 7 6 - - 3 2 1	SALEABLE		345650003
MX123 CONN ASSY 66 CKT BLK OPT9 KEY A/34	348220373	C-HSG-A9	G-CAP-9-P	TPA-A9	RS	LS	MAL	CPA	MSEAL	RSEAL	- - - - - 59 58 57 56 - 54 53 - - 50 - - - - - 44 43 42 41 40 39 - 37 36 35 34 33 - - 31 - - 28 - 26 25 24 23 - - - - - - 16 15 14 13 - - - 9 8 7 6 - - - - -	SALEABLE		345650003
MX123 CONN ASSY 66 CKT BLK OPT9 KEY A/34	348220383	C-HSG-A9	G-CAP-9-P	TPA-A9	RS	LS	MAL	CPA	MSEAL	RSEAL	- - - - - 59 58 - 56 55 54 53 - - 50 - - - - - 44 43 42 41 - 39 38 37 36 35 34 33 - - 31 - - 28 - 26 25 24 23 - - - - - - 16 15 14 13 - - - 9 8 7 6 - - - - -	SALEABLE		345650003
MX123 CONN ASSY 66 CKT BLK OPT0 KEY A/34	348220393	C-HSG-A0	G-CAP-0-P	TPA-A0	RS	LS	MAL	CPA	MSEAL	RSEAL	- - - - - 59 58 - 56 55 54 53 - - 50 - - - - - 44 43 42 41 40 39 - 37 36 35 34 33 - - 31 - - 28 - 26 25 24 23 - - - - - - 16 15 14 13 - - - 9 8 7 6 - - - - -	SALEABLE		345650003
MX123 CONN ASSY 66 CKT BLK OPT9 KEY A/30	348220403	C-HSG-A9	G-CAP-9-P	TPA-A9	RS	LS	MAL	CPA	MSEAL	RSEAL	- - 62 61 60 59 58 57 56 55 - - 52 - 50 - 48 47 46 45 44 43 42 41 40 39 - - 36 - 34 - - 32 - 30 29 - 27 26 25 24 23 - 21 - - - - 16 - - - - - 10 9 - - 6 5 - - - -	SALEABLE		345650003
MX123 CONN ASSY 66 CKT BLK OPT0 KEY A/28	348220413	C-HSG-A0	G-CAP-0-P	TPA-A0	RS	LS	MAL	CPA	MSEAL	RSEAL	- - 62 61 60 59 58 57 56 55 - - 52 - 50 - 48 47 46 45 44 43 42 41 40 39 - - 36 - 34 - - 32 31 30 29 - 27 26 25 24 23 - 21 - - - - 16 - - - - 11 10 9 - - 6 5 - - - -	SALEABLE		345650003
MX123 CONN ASSY 66 CKT BLK OPT9 KEY A/34	348220423	C-HSG-A9	G-CAP-9-P	TPA-A9	RS	LS	MAL	CPA	MSEAL	RSEAL	64 63 62 61 60 - - - - 55 - - 52 51 - 49 48 47 46 45 - - - - - - 38 - - - - - - 32 - 30 29 - 27 - - - - 22 21 20 19 18 17 - - - - 12 11 10 - - - - 5 4 3 2 1	SALEABLE		345650003
MX123 CONN ASSY 66 CKT BLK OPT0 KEY A/56	348220433	C-HSG-A0	G-CAP-0-P	TPA-A0	RS	LS	MAL	CPA	MSEAL	RSEAL	- - - 61 - - 58 - - - - - - - - - - - - - 44 43 - 41 40 - 38 - - - - - - 31 - 5 4 - - -	SALEABLE		345650003
MX123 CONN ASSY 66 CKT BLK OPT0 KEY A/57	348220443	C-HSG-A0	G-CAP-0-P	TPA-A0	RS	LS	MAL	CPA	MSEAL	RSEAL	- - - 61 - - 58 - - - - - - - - - - - - - 44 43 - 41 40 - 38 - 5 4 - - -	SALEABLE		345650003
MX123 CONN ASSY 66 CKT BLK OPT0 KEY A/34	348220453	C-HSG-A0	G-CAP-0-P	TPA-A0	RS	LS	MAL	CPA	MSEAL	RSEAL	64 63 62 61 60 - - - - 55 - - 52 51 - 49 48 47 46 45 - - - - - - 38 - - - - - - 32 - 30 29 - 27 - - - - 22 21 20 19 18 17 - - - - 12 11 10 - - - - 5 4 3 2 1	SALEABLE		345650003
MX123 CONN ASSY 66 CKT BLK OPT0 KEY A/57	348220463	C-HSG-A0	G-CAP-0-P	TPA-A0	RS	LS	MAL	CPA	MSEAL	RSEAL	- - - 61 - - 58 - - - - - - - - - - - - - 44 - - 41 40 - 38 - - - - - - 31 - 5 4 - - -	SALEABLE		345650003
MX123 CONN ASSY 66 CKT BLU OPT9 KEY C/33	348220473	C-HSG-C9	G-CAP-9-P	TPA-C9	RS	LS	MAL	CPA	MSEAL	RSEAL	- - - 61 - - 58 - - - - - 52 - 50 - - - - - 44 43 - 41 40 - 38 - 36 - 34 - - 31 30 29 28 27 26 25 24 23 22 - 20 - - - - - 14 13 12 11 10 9 8 7 6 5 4 - - -	SALEABLE		345650003

molex

MX123 SEALED RCPT ASSY (66 Ckt)
BOM & PIN OUT SHEET

ASSEMBLY DESCRIPTION	ASSEMBLY PART NUMBER	CONNECTOR HOUSING	GROMMET CAP	TPA	RIGHT SLIDE	LEFT SLIDE	MATE ASSIST LEVER	CPA	MAT SEAL	RING SEAL	BLOCKED TERMINALS CAVITY WITH A NUMBER INDICATES BLOCKED TERMINAL POSITION CAVITY WITHOUT A NUMBER INDICATES OPEN TERMINAL POSITION	STATUS	COMMENTS	INTEGRAL COMPONENTS SOLD SEPARATELY DRESS COVER
MX123 CONN ASSY 66 CKT BLK OPT9 KEY A/29	348220483	C-HSG-A9	G-CAP-9-P	TPA-A9	RS	LS	MAL	CPA	MSEAL	RSEAL	- - 62 61 60 59 58 57 56 55 - - 52 - 50 - 48 47 46 45 44 43 42 41 40 39 - - 36 - 34 - - 32 31 30 29 - 27 26 25 - - 22 - - - - - - 16 - - - 12 11 10 9 - - 6 5 - - - -	SALEABLE		345650003
MX123 CONN ASSY 66 CKT BLU OPT0 KEY C/56	348220493	C-HSG-C0	G-CAP-0-P	TPA-C0	RS	LS	MAL	CPA	MSEAL	RSEAL	- - - 61 - - 58 - - - - - - - - - - - - - 44 43 - 41 40 - 38 - - - - - - - 31 - 5 4 - - -	SALEABLE		345650003
MX123 CONN ASSY 66 CKT BLK OPT0 KEY A/32	348220503	C-HSG-A0	G-CAP-0-P	TPA-A0	RS	LS	MAL	CPA	MSEAL	RSEAL	- 63 - - - - - 57 56 55 - - 52 - 50 49 - - 46 45 44 43 42 41 40 39 - - - 35 - 33 - 32 31 - - - 27 - 25 - 23 22 - 20 19 18 - - 16 - 14 - 12 11 10 - 8 - 6 5 - - - -	SALEABLE		345650003
MX123 CONN ASSY 66 CKT BLK OPT9 KEY A/32	348220513	C-HSG-A9	G-CAP-9-P	TPA-A9	RS	LS	MAL	CPA	MSEAL	RSEAL	64 - - - 60 - 58 57 56 55 - - 52 51 50 - 48 47 46 45 44 43 42 41 40 39 - - 36 - 34 - - 32 - 30 29 - 27 26 25 - 23 - - - - - - - 16 - - - - 11 10 9 - - 6 5 - - - -	SALEABLE		345650003
MX123 CONN ASSY 66 CKT BLU OPT0 KEY C/54	348220523	C-HSG-C0	G-CAP-0-P	TPA-C0	RS	LS	MAL	CPA	MSEAL	RSEAL	- - - 61 - - 58 - - - - - - - - - - - - - 44 43 - 41 40 - 38 - - - - - - - 31 - - - - - - - - - 21 20 - - - - - - - - - - - - - - 5 4 - - -	SALEABLE		345650003
MX123 CONN ASSY 66 CKT BLU OPT9 KEY C/51	348220533	C-HSG-C9	G-CAP-9-P	TPA-C9	RS	LS	MAL	CPA	MSEAL	RSEAL	- - 62 61 - - 58 - - - 54 - - - - - - - - - 44 43 - 41 40 - - 37 - - - - - - 31 - - - - - - - - - 21 - 19 - - - - 15 - - - - - - - - - 5 4 - - -	SALEABLE		345650003
MX123 CONN ASSY 66 CKT BLK OPT0 KEY A/36	348220543	C-HSG-A0	G-CAP-0-P	TPA-A0	RS	LS	MAL	CPA	MSEAL	RSEAL	- - - - - - 58 57 56 55 - - 52 - 50 - 48 - 46 45 44 43 42 41 40 39 - - 36 - 34 - - 32 31 30 29 - 27 26 - - 23 - - - - - - - 16 - - - - 11 10 9 - - 6 5 - - - -	SALEABLE		345650003
MX123 CONN ASSY 66 CKT BLK OPT0 KEY A/30	348220553	C-HSG-A0	G-CAP-0-P	TPA-A0	RS	LS	MAL	CPA	MSEAL	RSEAL	- - 62 61 60 59 58 57 56 55 - - 52 - 50 - 48 47 46 45 44 43 42 41 40 39 - - 36 - 34 - - 32 - 30 29 - 27 26 25 - - 22 - - - - - - 16 - - - 12 11 10 9 - - 6 5 - - - -	SALEABLE		345650003
MX123 CONN ASSY 66 CKT BLU OPT0 KEY C/53	348220563	C-HSG-C0	G-CAP-0-P	TPA-C0	RS	LS	MAL	CPA	MSEAL	RSEAL	- - - 61 - - 58 - - - - - - - - - - - - - 44 43 - 41 40 - 38 - - - - - - - 31 - - - - - 25 - - - 21 20 - - - - - - - - - - - - - - 5 4 - - -	SALEABLE		345650003
MX123 CONN ASSY 66 CKT BLK OPT0 KEY A/29	348220573	C-HSG-A0	G-CAP-0-P	TPA-A0	RS	LS	MAL	CPA	MSEAL	RSEAL	- - 62 61 60 59 58 57 56 55 - - 52 - 50 - 48 47 46 45 44 43 42 41 40 39 - - 36 - 34 - - 32 31 30 29 - 27 26 25 - 23 - 21 - - - - - 16 - - - - 11 10 9 - - 6 5 - - - -	SALEABLE		345650003
MX123 CONN ASSY 66 CKT BLK OPT0 KEY A/29	348220583	C-HSG-A0	G-CAP-0-P	TPA-A0	RS	LS	MAL	CPA	MSEAL	RSEAL	64 63 62 61 60 - - - - 55 - - 52 51 - 49 48 47 46 45 - 43 42 - 40 39 38 - - - - - - 32 - 30 29 - 27 - - - - 22 21 20 19 18 17 - - - - 12 11 10 - - 7 - 5 4 3 2 1	SALEABLE		345650003
MX123 CONN ASSY 66 CKT BLK OPT0 KEY A/33	348220593	C-HSG-A0	G-CAP-0-P	TPA-A0	RS	LS	MAL	CPA	MSEAL	RSEAL	- - - 61 - - 58 - - - - - 52 - 50 - - - - - 44 43 - 41 40 - 38 - 36 - 34 - - 31 30 29 28 27 26 25 24 23 22 - 20 - - - - - 14 13 12 11 10 9 8 7 6 5 4 - - -	SALEABLE		345650003

molex

MX123 SEALED RCPT ASSY (66 Ckt)
BOM & PIN OUT SHEET

ASSEMBLY DESCRIPTION	ASSEMBLY PART NUMBER	CONNECTOR HOUSING	GROMMET CAP	TPA	RIGHT SLIDE	LEFT SLIDE	MATE ASSIST LEVER	CPA	MAT SEAL	RING SEAL	BLOCKED TERMINALS CAVITY WITH A NUMBER INDICATES BLOCKED TERMINAL POSITION CAVITY WITHOUT A NUMBER INDICATES OPEN TERMINAL POSITION	STATUS	COMMENTS	INTEGRAL COMPONENTS SOLD SEPARATELY DRESS COVER
MX123 CONN ASSY 66 CKT BLU OPT0 KEY C/32	348220603	C-HSG-C0	G-CAP-0-P	TPA-C0	RS	LS	MAL	CPA	MSEAL	RSEAL	- - - 61 - - 58 - - - - - 52 - 50 - - - - - 44 43 - 41 40 - 38 - 36 - 34 - - - 31 30 29 28 27 26 25 24 23 22 21 20 - - - - - 14 13 12 11 10 9 8 7 6 5 4 - - -	SALEABLE		345650003
MX123 CONN ASSY 66 CKT BLK OPT0 KEY A/31	348220613	C-HSG-A0	G-CAP-0-P	TPA-A0	RS	LS	MAL	CPA	MSEAL	RSEAL	64 - - - 60 - 58 57 56 55 - - 52 51 50 49 48 47 46 45 44 43 42 41 40 39 - - 36 - 34 - 32 - 30 29 - 27 26 25 - 23 - - - - - - 16 - - - - 11 10 9 - - 6 5 - - - -	SALEABLE		345650003
MX123 CONN ASSY 66 CKT BLK OPT0 KEY A/55	348220623	C-HSG-A0	G-CAP-0-P	TPA-A0	RS	LS	MAL	CPA	MSEAL	RSEAL	- - - 61 - - 58 - - - - - - - - - - - - - 44 43 - 41 40 - 38 - - - - - - - - - - - - - - - - 21 20 - - - - - - - - - - - - - - 5 4 - - -	SALEABLE		345650003
MX123 CONN ASSY 66 CKT BLK OPT0 KEY A/33	348220633	C-HSG-A0	G-CAP-0-P	TPA-A0	RS	LS	MAL	CPA	MSEAL	RSEAL	64 - - - 60 - 58 57 56 55 - - 52 51 50 - 48 47 46 45 44 43 42 41 40 39 - - 36 - 34 - - - 30 29 - 27 26 25 - 23 - - - - - - 16 - - - - 11 10 9 - - 6 5 - - - -	SALEABLE		345650003
MX123 CONN ASSY 66 CKT BLU OPT9 KEY C/52	348220643	C-HSG-C9	G-CAP-9-P	TPA-C9	RS	LS	MAL	CPA	MSEAL	RSEAL	- - 62 61 - - 58 - - - 54 - - - - - - - - - 44 43 - 41 40 - - 37 - - - - - 31 - - - - - - - - - 21 - 19 - - - - - - - - - - - - - 5 4 - - -	SALEABLE		345650003
MX123 CONN ASSY 66 CKT BLK OPT0 KEY A/33	348220653	C-HSG-A0	G-CAP-0-P	TPA-A0	RS	LS	MAL	CPA	MSEAL	RSEAL	- - - - 60 - 58 57 56 55 - - 52 51 50 - 48 47 46 45 44 43 42 41 40 39 - - 36 - 34 - 32 - 30 29 - 27 26 25 - 23 - - - - - - 16 - - - - 11 10 9 - - 6 5 - - - -	SALEABLE		345650003
MX123 CONN ASSY 66 CKT BLU OPT9 KEY C/15	348220663	C-HSG-C9	G-CAP-9-P	TPA-C9	RS	LS	MAL	CPA	MSEAL	RSEAL	64 63 62 - - 59 - 57 56 55 - 53 52 51 50 49 48 47 46 45 - - 42 41 40 39 38 - 36 35 34 33 32 - 30 29 28 27 26 25 24 23 22 - - - 18 17 16 15 14 13 12 11 10 9 8 7 6 - - 3 2 1	SALEABLE		345650003
MX123 CONN ASSY 66 CKT BLK OPT0 KEY A/35	348220673	C-HSG-A0	G-CAP-0-P	TPA-A0	RS	LS	MAL	CPA	MSEAL	RSEAL	- 63 62 61 60 59 - - - - 54 53 - - - 49 - - - - - - - - - - 38 37 - 35 - 33 - 31 - - 28 - - - 24 23 22 21 20 19 18 17 - 15 14 13 - - - - 8 7 - - 4 3 2 1	SALEABLE		345650003
MX123 CONN ASSY 66 CKT BLK OPT9 KEY A/34	348220683	C-HSG-A9	G-CAP-9-P	TPA-A9	RS	LS	MAL	CPA	MSEAL	RSEAL	64 - - - - - 58 57 56 55 - - 52 51 50 - 48 47 46 45 - 43 42 41 40 39 - - 36 - 34 - 32 - 30 29 - 27 26 25 - - - - - - - - 16 - - - 12 11 10 9 - - 6 5 - - - -	SALEABLE		345650003
MX123 CONN ASSY 66 CKT BLU OPT9 KEY C/16	348220693	C-HSG-C9	G-CAP-9-P	TPA-C9	RS	LS	MAL	CPA	MSEAL	RSEAL	64 63 - - 60 59 - 57 56 55 - 53 52 51 50 49 48 47 46 45 - - 42 - - 39 38 - 36 35 34 33 32 - 30 29 28 27 26 25 24 23 22 21 - - 18 17 16 15 14 13 12 11 10 9 8 7 6 - - 3 2 1	SALEABLE		345650003
MX123 CONN ASSY 66 CKT BLK OPT0 KEY A/33	348220703	C-HSG-A0	G-CAP-0-P	TPA-A0	RS	LS	MAL	CPA	MSEAL	RSEAL	64 63 62 61 60 - - - - 55 - - 52 51 - 49 48 47 46 45 - - - - - - 38 - - - - - 32 - 30 29 - 27 - - - - 22 21 20 19 18 17 - - - - 12 11 10 9 - - - 5 4 3 2 1	SALEABLE		345650003
MX123 CONN ASSY 66 CKT BLK OPT0 KEY A/32	348220713	C-HSG-A0	G-CAP-0-P	TPA-A0	RS	LS	MAL	CPA	MSEAL	RSEAL	64 - - - 60 - 58 57 56 55 - - 52 51 50 - 48 47 46 45 44 43 42 41 40 39 - - 36 - 34 - 32 - 30 29 - 27 26 25 - 23 - - - - - - 16 - - - - 11 10 9 - - 6 5 - - - -	SALEABLE		345650003

MX123 SEALED RCPT ASSY (66 Ckt)
BOM & PIN OUT SHEET

ASSEMBLY DESCRIPTION	ASSEMBLY PART NUMBER	CONNECTOR HOUSING	GROMMET CAP	TPA	RIGHT SLIDE	LEFT SLIDE	MATE ASSIST LEVER	CPA	MAT SEAL	RING SEAL	BLOCKED TERMINALS CAVITY WITH A NUMBER INDICATES BLOCKED TERMINAL POSITION CAVITY WITHOUT A NUMBER INDICATES OPEN TERMINAL POSITION	STATUS	COMMENTS	INTEGRAL COMPONENTS SOLD SEPARATELY DRESS COVER
MX123 CONN ASSY 66 CKT BLU OPT9 KEY C/51	348220723	C-HSG-C9	G-CAP-9-P	TPA-C9	RS	LS	MAL	CPA	MSEAL	RSEAL	- - 62 61 - - 58 - - - 54 - - - - - (-) - - - - 44 43 - 41 40 - - 37 - - - - (-) - 31 - - - - - - - - - 21 - 19 - - - - - - - - - - 8 - - 5 4 - - -	SALEABLE		345650003
MX123 CONN ASSY 66 CKT BLK OPT0 KEY A/7	348220733	C-HSG-A0	G-CAP-0-P	TPA-A0	RS	LS	MAL	CPA	MSEAL	RSEAL	64 63 62 61 60 59 58 57 56 55 54 53 52 51 50 49 (-) 48 47 46 45 44 43 42 41 40 39 38 - - - - 33 (-) 32 31 30 29 28 27 26 25 24 23 22 21 20 19 18 17 16 15 14 13 12 11 10 9 8 7 - 5 4 3 2 1	SALEABLE		345650003
MX123 CONN ASSY 66 CKT BLK OPT0 KEY A/30	348220743	C-HSG-A0	G-CAP-0-P	TPA-A0	RS	LS	MAL	CPA	MSEAL	RSEAL	64 63 62 61 60 - - - - 55 - - 52 51 - 49 (-) 48 47 46 45 - 43 42 - 40 39 38 - - - - - (-) 32 - 30 29 - 27 - - - - 22 21 20 19 18 17 - - - - 12 11 10 - - - - 5 4 3 2 1	SALEABLE		345650003
MX123 CONN ASSY 66 CKT BLU OPT0 KEY C/55	348220753	C-HSG-C0	G-CAP-0-P	TPA-C0	RS	LS	MAL	CPA	MSEAL	RSEAL	- - - 61 - - 58 - - - - - - - - - (-) - - - - 44 43 - 41 40 - 38 - - - - - (-) - 31 - - - - - - - - - - 20 - - - - - - - - - - - - - - 5 4 - - -	SALEABLE		345650003
MX123 CONN ASSY 66 CKT BLU OPT0 KEY C/49	348220763	C-HSG-C0	G-CAP-0-P	TPA-C0	RS	LS	MAL	CPA	MSEAL	RSEAL	- - - - - - - - - - - - - - - - (-) - - - - - - - - - - - - - - - - (-) - - - - - - - 25 24 23 22 21 20 - - - - - 14 13 12 11 10 9 8 7 6 5 4 - - -	SALEABLE		345650003
MX123 CONN ASSY 66 CKT BLK OPT9 KEY A/29	348220773	C-HSG-A9	G-CAP-9-P	TPA-A9	RS	LS	MAL	CPA	MSEAL	RSEAL	- - - - - - - - - - - - - - - - (-) - - - - - 43 42 41 - - 38 - - - - 33 (-) 32 31 30 29 28 27 26 25 24 23 22 21 20 19 18 17 16 15 14 13 12 11 10 9 8 7 6 5 4 3 2 1	SALEABLE		345650003
MX123 CONN ASSY 66 CKT BLK OPT9 KEY A/33	348220783	C-HSG-A9	G-CAP-9-P	TPA-A9	RS	LS	MAL	CPA	MSEAL	RSEAL	- - - - 60 - 58 57 56 55 - - 52 51 50 - (-) 48 47 46 45 44 43 42 41 40 39 - - 36 - 34 - (-) 32 - 30 29 - 27 26 25 - 23 - - - - - - 16 - - - - 11 10 9 - - 6 5 - - - -	SALEABLE		345650003
MX123 CONN ASSY 66 CKT BLU OPT9 KEY C/52	348220793	C-HSG-C9	G-CAP-9-P	TPA-C9	RS	LS	MAL	CPA	MSEAL	RSEAL	- - 62 61 - - 58 - - - 54 - - - - - (-) - - - - 44 43 - 41 40 - - 37 - - - - (-) - 31 - - - - - - - - - - 20 19 - - - - - - - - - - - - - 5 4 - - -	SALEABLE		345650003
MX123 CONN ASSY 66 CKT BLU OPT0 KEY C/14	348220803	C-HSG-C0	G-CAP-0-P	TPA-C0	RS	LS	MAL	CPA	MSEAL	RSEAL	64 63 62 61 - 59 58 57 56 55 54 53 52 51 - 49 (-) 48 47 46 45 - 43 42 41 40 39 - - - - - - (-) - 31 30 29 28 27 26 25 24 23 22 21 20 19 18 17 16 15 14 - 12 11 10 9 8 7 - 5 4 3 2 1	SALEABLE		345650003
MX123 CONN ASSY 66 CKT BLU OPT0 KEY C/51	348220813	C-HSG-C0	G-CAP-0-P	TPA-C0	RS	LS	MAL	CPA	MSEAL	RSEAL	- - 62 61 - - 58 - - - 54 - - - - - (-) - - - - 44 43 - 41 40 - - 37 - - - - (-) - 31 - - - - - - - - - 21 20 19 - - - - - - - - - - - - - 5 4 - - -	SALEABLE		345650003
MX123 CONN ASSY 66 CKT BLU OPT0 KEY C/33	348220823	C-HSG-C0	G-CAP-0-P	TPA-C0	RS	LS	MAL	CPA	MSEAL	RSEAL	- - - 61 - - 58 - - - - - 52 - 50 - (-) - - - - 44 43 - 41 40 - 38 - 36 - 34 - (-) - 31 30 29 28 27 26 25 24 23 22 - 20 - - - - - 14 13 12 11 10 9 8 7 6 5 4 - - -	SALEABLE		345650003
MX123 CONN ASSY 66 CKT BLK OPT0 KEY A/54	348220833	C-HSG-A0	G-CAP-0-P	TPA-A0	RS	LS	MAL	CPA	MSEAL	RSEAL	- - - - 60 - - - - - - - - - 50 - (-) - - - - 44 - - - - - 38 37 36 35 34 33 (-) 32 - - - - - - - - - - - - - - - - - - 13 - - - - - - 6 - - - - -	SALEABLE		345650003

molex

MX123 SEALED RCPT ASSY (66 Ckt)
BOM & PIN OUT SHEET

ASSEMBLY DESCRIPTION	ASSEMBLY PART NUMBER	CONNECTOR HOUSING	GROMMET CAP	TPA	RIGHT SLIDE	LEFT SLIDE	MATE ASSIST LEVER	CPA	MAT SEAL	RING SEAL	BLOCKED TERMINALS CAVITY WITH A NUMBER INDICATES BLOCKED TERMINAL POSITION CAVITY WITHOUT A NUMBER INDICATES OPEN TERMINAL POSITION	STATUS	COMMENTS	INTEGRAL COMPONENTS SOLD SEPARATELY DRESS COVER
MX123 CONN ASSY 66 CKT BLK OPT9 KEY A/12	348220843	C-HSG-A9	G-CAP-9-P	TPA-A9	RS	LS	MAL	CPA	MSEAL	RSEAL	64 63 62 61 - 59 58 57 56 55 54 53 52 51 50 49 -	SALEABLE		345650003
											48 47 46 45 44 43 42 41 40 39 - - - - - -			
											- - 31 30 29 28 27 26 25 24 23 22 21 20 19 18 17			
											16 15 14 - 12 11 10 9 8 7 - 5 4 3 2 1			
MX123 CONN ASSY 66 CKT BLK OPT9 KEY A/14	348220853	C-HSG-A9	G-CAP-9-P	TPA-A9	RS	LS	MAL	CPA	MSEAL	RSEAL	64 63 62 61 - 59 58 57 56 55 54 53 52 51 - 49 -	SALEABLE		345650003
											48 47 46 45 - 43 42 41 40 39 - - - - - -			
											- - 31 30 29 28 27 26 25 24 23 22 21 20 19 18 17			
											16 15 14 - 12 11 10 9 8 7 - 5 4 3 2 1			

MX123 52/66/73/80-WAY RECEPTACLE ASSY SEALED PIN OUT SHEET

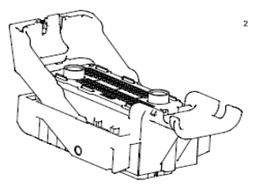

66 CKT
SCALE 3:2

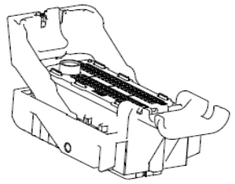

73 CKT
SCALE 3:2

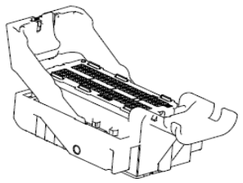

80 CKT
SCALE 3:2

UNCHECKED cavity number(s) are OPEN

72	71	70	69	68	67	66	65	64	63	62	61	60	59	58	57	56	55	54	53
☑	☑	☑	☑	☐	☐	☑	☑	☐	☐	☑	☑	☑	☑	☐	☑	☑	☑	☑	☑
52	51	50	49	48	47	46	45	44	43	42	41	40	39	38	37	36	35	34	33
☑	☑	☑	☑	☑	☑	☐	☐	☑	☐	☑	☑	☑	☑	☐	☑	☑	☑	☑	☑

			32	31	30	29	28	27	26	25	24	23	22	21	20	19	18	17
	73		☐	☑	☐	☐	☐	☐	☑	☑	☑	☑	☐	☑	☑	☑	☑	☐
	☑		16	15	14	13	12	11	10	9	8	7	6	5	4	3	2	1
			☑	☐	☑	☐	☑	☑	☐	☑	☑	☑	☑	☑	☑	☑	☑	☑

FOR ADDITIONAL INFORMATION SEE SD-34566-001

STATUS	GM PART #	HRNS CONN ASSY			TPA	GROMMET CAP
		MATERIAL/PART NUMBER	WIRE DRESS OPTION	KEY OPTION Fp	COLOR OPTION Fp	NUMBERS INDICATE CAVITIES OPEN FOR CIRCUITS Fp
SALEABLE	12672860	34566-0103	0	A	BLACK	
SALEABLE	12672862	34566-0203	0	B	ST GRY	72 71 70 69 68 67 66 65 64 63 62 61 60 59 58 57 56 55 54 53
SALEABLE	12672864	34566-0303	0	C	BLUE	52 51 50 49 48 47 46 45 44 43 42 41 40 39 38 37 36 35 34 33
TOOL DES. REL.	12615660	34566-0403	0	D	BROWN	73 32 31 30 29 28 27 26 25 24 23 22 21 20 19 18 17
TOOL DES. REL.	12615661	34566-0503	0	E	GREEN	16 15 14 13 12 11 10 9 8 7 6 5 4 3 2 1
SALEABLE	12672866	34566-0603	0	F	NATURAL	
SALEABLE	12672872	34566-0703	0	G	BLUE	
SALEABLE	12672870	34566-0803	0	H	ST GRY	80 79 78 77 76 75 74 73 72 71 70 69 68 67 66 65 64 63 62 61
TOOL DES. REL.	12672868	34566-0903	0	J	BLACK	60 61 62 63 64 65 66 67 68 69 70 71 72 73 74 75 76 77 78 79
TOOL DES. REL.	TBD	34566-1003	0	K	BROWN	40 39 38 37 36 35 34 33 32 31 30 29 28 27 26 25 24 23 22 21
TOOL DES. REL.	TBD	34566-1103	0	L	GREEN	20 19 18 17 16 15 14 13 12 11 10 9 8 7 6 5 4 3 2 1
TOOL DES. REL.	TBD	34566-1203	0	M	NATURAL	
SALEABLE	12672861	34566-1303	9	A	BLACK	
SALEABLE	12672863	34566-1403	9	B	ST GRY	72 71 70 69 68 67 66 65 64 63 62 61 60 59 58 57 56 55 54 53
SALEABLE	12672865	34566-1503	9	C	BLUE	52 51 50 49 48 47 46 45 44 43 42 41 40 39 38 37 36 35 34 33
TOOL DES. REL.	12615663	34566-1603	9	D	BROWN	73 32 31 30 29 28 27 26 25 24 23 22 21 20 19 18 17
TOOL DES. REL.	12615664	34566-1703	9	E	GREEN	16 15 14 13 12 11 10 9 8 7 6 5 4 3 2 1
SALEABLE	12672867	34566-1803	9	F	NATURAL	
SALEABLE	12672873	34566-1903	9	G	BLUE	
SALEABLE	12672871	34566-2003	9	H	ST GRY	80 79 78 77 76 75 74 73 72 71 70 69 68 67 66 65 64 63 62 61
TOOL DES. REL.	12672869	34566-2103	9	J	BLACK	60 61 62 63 64 65 66 67 68 69 70 71 72 73 74 75 76 77 78 79
TOOL DES. REL.	TBD	34566-2203	9	K	BROWN	40 39 38 37 36 35 34 33 32 31 30 29 28 27 26 25 24 23 22 21
TOOL DES. REL.	TBD	34566-2303	9	L	GREEN	20 19 18 17 16 15 14 13 12 11 10 9 8 7 6 5 4 3 2 1
TOOL DES. REL.	TBD	34566-2403	9	M	NATURAL	
SALEABLE	12672856	34822-0013	0	A	BLACK	64 63 62 61 60 59 58 57 56 55 54 53 52 51 50 49 66 48 47 46 45 44 43 42 41 40 39 38 37 36 35 34 33
SALEABLE	12672858	34822-0033	0	C	BLUE	65 32 31 30 29 28 27 26 25 24 23 22 21 20 19 18 17 16 15 14 13 12 11 10 9 8 7 6 5 4 3 2 1
SALEABLE	12672857	34822-0023	9	A	BLACK	64 63 62 61 60 59 58 57 56 55 54 53 52 51 50 49 66 48 47 46 45 44 43 42 41 40 39 38 37 36 35 34 33
SALEABLE	12672859	34822-0043	9	C	BLUE	65 32 31 30 29 28 27 26 25 24 23 22 21 20 19 18 17 16 15 14 13 12 11 10 9 8 7 6 5 4 3 2 1

molex

MX123 52/66/73/80-WAY RECEPTACLE ASSY SEALED PIN OUT SHEET

STATUS	GM PART #	HRNS CONN ASSY			TPA	GROMMET CAP
		MATERIAL/PART NUMBER	WIRE DRESS OPTION	KEY OPTION Fp	COLOR OPTION Fp	NUMBERS INDICATE CAVITIES OPEN FOR CIRCUITS Fp
TOOL DES. REL.	12672852	160094-0001	0	A	BLACK	
TOOL DES. REL.	N/A	160094-0002	0	B	ST GRY	52: 14 13 12 11 10 9 8 7 6 5 4 3; 26 25 24 23 22 21 20 19 18 17 16 15; 2
TOOL DES. REL.	12672854	160094-0003	0	C	BLUE	
TOOL DES. REL.	N/A	160094-0004	0	D	BROWN	51: 38 37 36 35 34 33 32 31 30 29 28 27; 50 49 48 47 46 45 44 43 42 41 40 39; 1
TOOL DES. REL.	N/A	160094-0005	0	E	GREEN	
TOOL DES. REL.	N/A	160094-0006	0	F	NATURAL	
TOOL DES. REL.	12672853	160094-0013	9	A	BLACK	
TOOL DES. REL.	N/A	160094-0014	9	B	ST GRY	52: 14 13 12 11 10 9 8 7 6 5 4 3; 26 25 24 23 22 21 20 19 18 17 16 15; 2
TOOL DES. REL.	12672855	160094-0015	9	C	BLUE	
TOOL DES. REL.	N/A	160094-0016	9	D	BROWN	51: 38 37 36 35 34 33 32 31 30 29 28 27; 50 49 48 47 46 45 44 43 42 41 40 39; 1
TOOL DES. REL.	N/A	160094-0017	9	E	GREEN	
TOOL DES. REL.	N/A	160094-0018	9	F	NATURAL	
NA	NA	NA	NA	NA	NA	73: 68 67 66 64 63 62 59 56 53; 48 46 44 43 42 39 36 35 33; 32 30 29 27 23 20 17; 14 13 12 11 9 8 5 4 3 2 1
SALEABLE	NOT APPLICABLE	34566-2503	0	A	BLACK	72 71 69; 50; 73: 67 65 59 57 55 53; 49 47 44 39 37 35 33; 29 28 23 21; 7
SALEABLE	NOT APPLICABLE	34566-2603	0	B	ST GRY	65 59 57 55 53; 49 48 47 44 39 37 35 33; 29 28 23 21; 7
SALEABLE	NOT APPLICABLE	34566-2703	0	B	ST GRY	
SALEABLE	TBD	34566-2803	0	H	ST GRY	
SALEABLE	NOT APPLICABLE	34566-2903	0	A	BLACK	72 71 70 69 68 67 66 64 63 62 61 59 55 54 53; 52 51 49 48 44 43 42 41 39 35 34 33; 73: 32 31 29 27 25 23 19 18 17; 16 13 12 11 9 8 7 6 5 4 3 2 1
SALEABLE	NOT APPLICABLE	34566-3003	0	A	BLACK	72 71 70 69 68 67 66 64 63 62 60 59 58 57 56 55 54 53; 52 51 50 49 48 47 46 44 43 42 41 40 39 38 37 36 35 34 33; 73: 32 31 30 29 28 27 25 24 23 22 21 20 19 18 17; 16 15 14 13 12 11 9 8 7 6 5 4 3 2 1
SALEABLE	NOT APPLICABLE	34566-3103	0	B	ST GRY	65 62 59 57 55 53; 49 48 46 42 39 37 35 33; 29 26 23 21 18; 15 9 8 7 4 3
SALEABLE	NOT APPLICABLE	34566-3203	0	B	ST GRY	67 60 59 58 57 56 55 53; 50 49 48 46 39 38 37 35 34 33; 29 23 22 21 18; 16 15 14 7 6 5 4 3
SALEABLE	NOT APPLICABLE	34566-3303	0	B	ST GRY	59 58 57 56 55 53; 50 49 48 46 39 38 37 35 34 33; 29 23 22 21 18; 16 15 14 7 6 5 4 3
SALEABLE	NOT APPLICABLE	34566-3403	SEE 34566-3003			
SALEABLE	NOT APPLICABLE	34566-3503	0	A	BLACK	72 71 69 68 67 66 64 63 62 60 59; 52 49 48 46 44 43 42 40 39 35 33; 73: 32 29 27 24 23 17; 14 13 12 11 9 8 7 6 5 4 3 2 1

molex

MX123 52/66/73/80-WAY RECEPTACLE ASSY SEALED PIN OUT SHEET

STATUS	GM PART #	HRNS CONN ASSY			TPA	GROMMET CAP																			
		MATERIAL/PART NUMBER	WIRE DRESS OPTION	KEY OPTION Fp	COLOR OPTION Fp	NUMBERS INDICATE CAVITIES OPEN FOR CIRCUITS Fp																			
SALEABLE	NOT APPLICABLE	34566-3603	0	B	ST GRY					68				64					59		57		55		53
									49	48		46							39		37		35		33
						73				32			29						23		21			18	
															11	10			7						
SALEABLE	NOT APPLICABLE	34566-3703	0	A	BLACK					68	67	66	65						59				55		53
									49	48	47			44					39				35		33
						73							29	28					23						
																			7						
SALEABLE	NOT APPLICABLE	34566-3803	0	A	BLACK	72	71		69	68	67	66		64	63	62			59			56			53
								50		48		46		44	43	42			39			36	35		33
						73				32		30	29		27				23			20			17
												14	13	12	11	10	9	8			5	4	3	2	1
SALEABLE	NOT APPLICABLE	34566-3903	0	B	ST GRY								65						59		57		55		53
									49	48		46		44					39		37		35		33
						73							29	28				24	23		21				
																			7						
SALEABLE	NOT APPLICABLE	34566-4003	0	B	ST GRY						67	66		64	63				59		57		55		53
								50	49	48					43				39		37		35		33
						73				32			29		27			24	23		21			18	
							15												7	6	5	4	3		
SALEABLE	NOT APPLICABLE	34566-4103	0	A	BLACK	72	71		69	68	67	66		64	63	62		60	59						
		52			49	48		46	45	44	43	42		40	39					35		33
						73				32			29		27	26		24	23						17
								14	13	12	11	10	9	8	7	6	5	4	3	2	1
SALEABLE	NOT APPLICABLE	34566-4203	0	B	ST GRY									64					59		57		55		53
								50	49	48		46							39		37		35		33
						73				32			29					24	23		21			18	
							15												7	6	5	4	3		
SALEABLE	NOT APPLICABLE	34566-4303	0	A	BLACK			70	69	68	67		65	64	63		61		59	58	57	56			
								50	49	48	47						41			38	37	36		34	33
						73				32	31	30	29	28	27			24	23			20	19	18	
										16			13	12	11	10	9								1
SALEABLE	NOT APPLICABLE	34566-4403	0	A	BLACK	72	71	70	69	68	67	66	65	64	63		61		59	58	57	56			
								50	49	48	47						41			38	37	36		34	33
						73				32	31	30	29	28	27			24	23			20	19	18	
										16			13	12	11	10	9			6		4			
SALEABLE	NOT APPLICABLE	34566-4503	0	H	ST GRY		79	78	77	76	75	74	73	72	71	70	69	68		66	65	64	63		61
		60	59	58	57	56			53			50							44	43		41
		40	39	38	37		35	34	33	32		30	29		27	26		24	23	22	21
		20	19	18	17				13	12	11			8		6	5		3	2	
SALEABLE	NOT APPLICABLE	34566-4603	0	H	ST GRY		79	78	77	76	75	74	73	72	71	70	69	68		66	65	64	63		61
		60	59	58	57	56			53			50							44	43		41
		40	39	38	37		35	34	33	32		30	29		27	26				22	21
		20	19	18	17				13	12				8		6	5		3	2	
SALEABLE	NOT APPLICABLE	34566-4703	0	B	ST GRY						67	66	65	64					59	58	57		55		53
									49	48	47			44					39	38	37		35		33
						73							29						23	22	21				
														12			9		7						
SALEABLE	NOT APPLICABLE	34566-4803	0	A	BLACK	72	71		69	68	67	66		64	63	62	61		59						53
						48						44		42	41			39				35		33
						73				32			29		27		25		23						17
													13	12	11		9	8			5	4	3	2	1
SALEABLE	NOT APPLICABLE	34566-4903	0	A	BLACK	72	71	70	69	68		66	65	64	63	62	61		59	58	57	56	55		
		52	51	50	49		47			44	43			41					38	37	36	35	34	33
						73				32	31	30	29	28	27			24	23			20	19	18	17
										16	15	14	13	12	11	10	9							2	1
SALEABLE	NOT APPLICABLE	34566-5003	0	H	ST GRY		79	78	77	76	75	74	73	72	71	70	69	68		66	65	64	63		61
		60	59	58	57	56			53	52		50							44	43		41
		40	39	38	37		35	34	33	32		30	29		27	26				22	21
		20	19	18	17	16		14	13	12	11	10	9	8		6	5		3	2	

molex

MX123 52/66/73/80-WAY RECEPTACLE ASSY SEALED PIN OUT SHEET

STATUS	GM PART #	HRNS CONN ASSY			TPA	GROMMET CAP																			
		MATERIAL/PART NUMBER	WIRE DRESS OPTION	KEY OPTION Fp	COLOR OPTION Fp	NUMBERS INDICATE CAVITIES OPEN FOR CIRCUITS Fp																			
SALEABLE	NOT APPLICABLE	34566-5103	0	B	ST GRY						67	66	65						59		57		55		53
									49	48	47	46		44					39		37		35		33
						73							29	28					23		21				
																			7						
SALEABLE	NOT APPLICABLE	34566-5203	0	A	BLACK	72	71		69	68	67	66		64	63	62			59	58	57	56		54	53
						52	51	50	49	48	47	46		44	43	42			39	38	37	36	35	34	33
						73				32	31	30	29		27			24	23	22	21	20	19		17
											15	14	13	12	11		9	8	7	6	5	4	3	2	1
SALEABLE	NOT APPLICABLE	34566-5303	0	B	ST GRY								65	64					59		57		55		53
								50	49	48		46							39		37		35		33
						73				32			29						23		21				
											15								7	6	5	4	3		
SALEABLE	NOT APPLICABLE	34566-5403	0	B	ST GRY								65						59	58	57	56	55		53
								50	49	48		46	45						39	38	37		35	34	33
						73							29						23	22	21			18	
										16	15	14							7	6	5	4	3		
SALEABLE	NOT APPLICABLE	34566-5503	0	A	BLACK	72	71		69	68	67	66		64	63	62		60	59						
						52			49	48		46		44	43	42		40	39				35		33
						73				32			29		27	26		24	23						17
												14	13	12	11	10	9	8	7	6	5	4	3	2	1
SALEABLE	NOT APPLICABLE	34566-5603	SEE 34566-2503																						
SALEABLE	NOT APPLICABLE	34566-5703	0	B	ST GRY					68									59		57		55		53
									49	48		46							39		37		35		33
						73							29						23		21			18	17
														12	11	10			7						
SALEABLE	NOT APPLICABLE	34566-5803	0	B	ST GRY								65						59		57		55		53
									49	48	47								39		37		35		33
						73							29						23		21				17
														12					7						
SALEABLE	NOT APPLICABLE	34566-5903	0	A	BLACK	72	71		69	68	67	66		64	63	62			59						53
										48				44	43	42			39				35		33
						73				32			29		27				23						17
													13	12	11		9	8			5	4	3	2	1
SALEABLE	NOT APPLICABLE	34566-6003	0	B	ST GRY						67	66	65						59		57		55		53
									49	48	47								39		37		35		33
						73							29						23		21				
																			7						
SALEABLE	NOT APPLICABLE	34566-6103	0	B	ST GRY						67	66	65			62			59		57		55		53
									49	48	47					42			39		37		35		33
						73							29			26			23		21				
																	9		7						
SALEABLE	NOT APPLICABLE	34566-6203	0	A	BLACK		71	70	69	68			65	64	63		61		59		57	56			
						52	51	50	49		47						41			38	37	36		34	33
						73				32	31	30	29	28	27			24	23			20	19	18	
										16			13	12	11	10	9								1
SALEABLE	NOT APPLICABLE	34566-6303	0	A	BLACK		71	70	69	68			65	64	63		61		59		57	56			
						52	51	50	49		47						41			38	37	36		34	33
						73				32	31	30	29	28	27			24	23			20	19	18	
										16			13	12	11	10	9							2	1
SALEABLE	NOT APPLICABLE	34566-6403	0	A	BLACK		71		69	68			65	64	63		61		59	58		56			
						52		50	49		47						41			38	37	36		34	33
						73				32	31	30	29	28	27			24	23			20	19	18	17
										16			13	12	11	10	9								1
SALEABLE	NOT APPLICABLE	34566-6503	0	A	BLACK		71		69	68			65	64	63		61		59	58		56			
						52		50	49		47						41			38	37	36		34	33
						73				32	31	30	29	28	27			24	23			20	19	18	17
										16			13	12	11	10	9							2	1

molex

MX123 52/66/73/80-WAY RECEPTACLE ASSY SEALED PIN OUT SHEET

STATUS	GM PART #	HRNS CONN ASSY			TPA	GROMMET CAP																			
		MATERIAL/PART NUMBER	WIRE DRESS OPTION	KEY OPTION Fp	COLOR OPTION Fp	NUMBERS INDICATE CAVITIES OPEN FOR CIRCUITS Fp																			
SALEABLE	NOT APPLICABLE	34566-6603	0	H	ST GRY		79	78	77	76	75	74	73	72	71	70	69	68		66	65	64	63		61
						60	59	58	57	56			53	52		50						44	43		41
						40	39	38	37		35	34	33	32		30	29		27	26				22	21
						20	19	18	17	16			13	12				8		6	5		3	2	
SALEABLE	NOT APPLICABLE	34566-6703	0	H	ST GRY		79	78	77	76	75	74	73	72	71	70	69	68		66	65	64	63		61
						60	59	58	57	56			53			50						44	43		41
						40	39	38	37		35	34	33	32		30	29		27	26				22	21
						20	19	18	17			14	13	12	11	10	9	8		6	5		3	2	
SALEABLE	NOT APPLICABLE	34566-6803	0	B	ST GRY								65						59		57		55		53
									49	48		46		44					39		37		35		33
						73							29	28					23		21				
																			7						
SALEABLE	NOT APPLICABLE	34566-6903	0	B	ST GRY									64					59		57		55		53
									49	48		46							39		37		35		33
						73				32			29						23		21			18	
																			7						
SALEABLE	NOT APPLICABLE	34566-7003	0	B	ST GRY						67	66							59		57	56	55		53
								50	49	48	47								39		37	36	35		33
						73							29						23		21			18	17
											15		13	12				8	7	6	5	4	3		
SALEABLE	NOT APPLICABLE	34566-7103	0	A	BLACK	72	71	70	69	68	67	66		64	63	62		60	59				55	54	53
						52			49	48				44	43	42		40	39				35	34	33
						73				32			29	28	27			24	23				19	18	17
										16			13	12	11		9	8	7	6	5	4	3	2	1
SALEABLE	NOT APPLICABLE	34566-7203	0	B	ST GRY	72	71	70	69	68	67	66	65	64	63	62		60	59				55	54	53
						52			49	48				44	43	42			39				35	34	33
						73				32			29		27			24	23			20	19	18	17
										16			13	12	11		9	8	7	6	5	4	3	2	1
SALEABLE	NOT APPLICABLE	34566-7303	0	B	ST GRY				69	68		66							59				55		53
									49	48		46		44					39		37		35		33
						73							29	28					23		21			18	17
														12	11	10			7						
SALEABLE	NOT APPLICABLE	34566-7403	0	B	ST GRY														59		57		55		53
								50	49	48		46							39		37		35		33
						73							29						23		21				
											15								7	6	5	4	3		
SALEABLE	NOT APPLICABLE	34566-7503	0	A	BLACK	72	71	70	69	68	67	66		64	63	62		60	59	58	57	56	55	54	53
						52	51	50	49	48	47	46		44	43	42		40	39	38	37	36	35	34	33
						73				32	31	30	29	28	27			24	23	22	21	20	19	18	17
										16	15	14	13	12	11		9	8	7	6	5	4	3	2	1
SALEABLE	NOT APPLICABLE	34566-7603	0	B	ST GRY				69	68		66							59		57		55		53
									49	48		46		44					39		37		35		33
						73							29	28					23		21			18	17
														12	11	10			7						
SALEABLE	NOT APPLICABLE	34566-7703	0	A	BLACK	72	71	70	69	68	67	66		64	63	62		60	59				55	54	53
						52			49	48				44	43	42		40	39				35	34	33
						73				32			29		27			24	23				19	18	17
										16			13	12	11		9	8	7	6	5	4	3	2	1
SALEABLE	NOT APPLICABLE	34566-7803	0	A	BLACK	72	71	70		68		66		64	63	62	61	60	59				55	54	53
						52			49	48		46		44	43	42		40	39				35	34	33
						73				32			29	28	27			24	23				19	18	17
										16		14	13	12	11		9	8	7	6			3	2	1
SALEABLE	NOT APPLICABLE	34566-7903	0	B	ST GRY									64			61		59		57		55		53
																42			39				35		33
						73													23			20	19		
											15											4	3	2	1
SALEABLE	NOT APPLICABLE	34566-8003	0	A	BLACK				69	68			65	64	63		61	60	59	58		56			
						52		50	49	48	47						41			38	37	36		34	33
						73				32	31	30	29	28	27			24	23			20	19	18	17
										16			13	12	11	10	9								1

molex

MX123 52/66/73/80-WAY RECEPTACLE ASSY SEALED PIN OUT SHEET

STATUS	GM PART #	HRNS CONN ASSY			TPA	GROMMET CAP																				
		MATERIAL/PART NUMBER	WIRE DRESS OPTION	KEY OPTION Fp	COLOR OPTION Fp	NUMBERS INDICATE CAVITIES OPEN FOR CIRCUITS Fp																				
SALEABLE	NOT APPLICABLE	34566-8103	0	H	ST GRY			78						72	71	70	69	68		66	65	64	63		61
						60	59	58	57	56			53	52		50						44	43		41
						40			37		35	34	33	32		30	29		27	26		24		22	21
						20	19	18	17	16			13	12				8		6	5		3	2	
SALEABLE	NOT APPLICABLE	34566-8203	0	A	BLACK			70			67	66								58		56	55	54	
											47			44	43	42	41		39		37	36		34	
						73					31	30			27		25	24			21	20	19	18	
													13							6	5	4	3		1
SALEABLE	NOT APPLICABLE	34566-8303	0	A	BLACK	72	71		69	68	67	66		64	63	62			59	58	57	56		54	53
						52	51	50	49	48	47	46		44	43	42			39	38	37	36	35	34	33
						73				32	31	30	29		27			24	23	22	21	20	19		17
											15	14	13	12	11		9	8	7	6	5	4	3	2	1
SALEABLE	NOT APPLICABLE	34566-8403	0	B	ST GRY								65	64					59		57		55		53
								50	49	48		46							39		37		35		33
						73				32			29					24	23		21				
											15								7	6	5	4	3		
SALEABLE	NOT APPLICABLE	34566-8503	0	B	ST GRY	72	71	70	69	68	67	66	65	64	63	62		60	59				55	54	53
						52			49	48				44	43	42			39				35	34	33
						73				32			29		27			24	23				19	18	17
													13	12	11		9	8	7	6	5	4	3	2	1
SALEABLE	NOT APPLICABLE	34566-8603	0	A	BLACK				69	68		66							59		57		55		53
									49	48		46		44					39	38	37		35		33
						73							29	28					23		21			18	17
														12	11	10			7						
SALEABLE	NOT APPLICABLE	34566-8703	0	B	ST GRY				69	68		66		64					59		57		55		53
								50	49	48	47			44					39		37		35		33
						73							29	28					23		21				17
											15			12	11	10			7	6	5	4	3		
SALEABLE	NOT APPLICABLE	34566-8803	0	B	ST GRY					68	67	66	65						59	58	57			54	53
							51	50	49	48		46	45		43	42		40	39	38	37				33
						73				32	31	30				26		24	23	22		20			
										16			13			10	9	8	7	6	5	4			
SALEABLE	NOT APPLICABLE	34566-8903	0	H	ST GRY			78							71	70	69	68	67	66	65	64	63		61
								58	57	56			53	52	51	50						44	43		41
						40			37		35	34	33	32		30	29		27	26				22	21
						20	19	18	17	16		14		12		10	9	8	7	6	5		3	2	1
SALEABLE	NOT APPLICABLE	34566-9003	0	B	ST GRY				69	68		66							59		57		55		53
									49	48		46		44					39		37		35		33
						73							29	28					23		21			18	
															11	10			7						
SALEABLE	NOT APPLICABLE	34566-9103	0	A	BLACK					68			65		63		61		59	58		56			53
						52	51	50			47						41			38	37	36	35	34	33
						73				32	31	30	29	28	27		25	24	23	22	21	20	19	18	17
										16	15	14	13	12	11	10	9								1
SALEABLE	NOT APPLICABLE	34566-9203	0	A	BLACK	72	71	70	69	68	67	66		64	63	62		60	59				55	54	53
						52			49	48				44	43	42		40	39	38			35	34	33
						73						30	29	28	27			24	23				19	18	17
										16			13	12	11		9	8	7	6	5	4	3	2	1
SALEABLE	NOT APPLICABLE	34566-9303	0	A	BLACK	72	71		69	68	67	66		64	63	62			59	58	57	56	55	54	53
						52	51	50	49	48	47	46		44	43	42			39	38	37	36	35	34	33
						73				32	31	30	29		27			24	23	22	21	20	19		17
											15	14	13	12	11		9	8	7	6	5	4	3	2	1
SALEABLE	NOT APPLICABLE	34566-9403	0	B	ST GRY					68	67	66	65						59	58	57			54	53
							51	50	49	48		46	45		43	42	41	40	39	38	37		35		33
						73				32	31	30				26		24	23	22		20			
										16			13			10	9	8	7	6	5	4			
SALEABLE	NOT APPLICABLE	34566-9503	0	A	BLACK	72	71	70	69	68			65	64	63		61		59	58	57	56			
						52	51		49		47						41			38	37	36		34	33
						73				32	31	30	29	28	27			24	23			20	19	18	17
										16			13	12	11	10	9								1

molex

MX123 52/66/73/80-WAY RECEPTACLE ASSY SEALED PIN OUT SHEET

STATUS	GM PART #	HRNS CONN ASSY			TPA	GROMMET CAP																			
		MATERIAL/PART NUMBER	WIRE DRESS OPTION	KEY OPTION Fp	COLOR OPTION Fp	NUMBERS INDICATE CAVITIES OPEN FOR CIRCUITS Fp																			
SALEABLE	NOT APPLICABLE	34566-9603	0	A	BLACK		71	70	69	68		66	65	64	63		61		59	58	57	56			
						52		50	49		47						41			38	37	36	35	34	33
						73				32	31	30	29	28	27			24	23			20	19	18	17
										16	15	14	13	12	11	10	9								1
SALEABLE	NOT APPLICABLE	34566-9703	0	A	BLACK	72	71	70	69	68			65	64	63		61		59		57	56			
						52	51	50	49		47						41			38	37	36		34	33
						73				32	31	30	29	28	27			24	23			20	19	18	
										16			13	12	11	10	9						3	2	1
SALEABLE	NOT APPLICABLE	34566-9803	0	A	BLACK	72	71	70	69	68			65	64	63		61		59		57	56			
						52	51	50	49		47						41			38	37	36		34	33
						73				32	31	30	29	28	27			24	23			20	19	18	
										16			13	12	11	10	9								1
SALEABLE	NOT APPLICABLE	34566-9903	0	A	BLACK		71		69	68			65	64	63		61		59	58	57	56			
						52		50	49		47						41			38	37	36		34	33
						73				32	31	30	29	28	27			24	23			20	19	18	17
										16			13	12	11	10	9								1
SALEABLE	NOT APPLICABLE	34566-1013	0	A	BLACK		71		69	68			65	64	63		61		59	58	57	56			
						52		50	49		47						41			38	37	36		34	33
						73				32	31	30	29	28	27			24	23			20	19	18	17
										16			13	12	11	10	9						3	2	1
SALEABLE	NOT APPLICABLE	34566-1023	0	A	BLACK			70			67	66	65							58	57		55	54	
								50	49		47			44	43	42	41		39		37		35		
						73				32		30			27		25	24			21	20	19	18	17
										16	15		13			10	9	8		6	5		3	2	1
SALEABLE	NOT APPLICABLE	34566-1033	0	A	BLACK	72		70			67	66	65							58	57		55	54	
								50	49		47			44	43	42	41		39		37		35		
						73				32		30			27	26	25	24			21	20	19	18	17
										16	15		13			10	9	8		6	5		3	2	1
SALEABLE	NOT APPLICABLE	34566-1043	0	B	ST GRY		71	70		68		66	65						59	58	57			54	53
							51	50	49	48		46	45		43		41	40	39	38	37	36	35		33
						73				32	31	30						24	23	22		20			
										16			13	12	11	10	9	8	7	6	5	4			
SALEABLE	NOT APPLICABLE	34566-1053	0	H	ST GRY		79	78	77	76	75	74	73	72	71	70	69	68		66	65	64	63		61
						60	59	58	57	56			53	52		50						44	43		41
						40	39	38	37		35	34	33	32		30	29		27	26				22	21
						20	19	18	17	16		14	13	12	11		9	8		6	5		3	2	
SALEABLE	NOT APPLICABLE	34566-1063	0	B	ST GRY								65					60	59		57	56	55		53
									49	48	47			44				40	39		37	36	35		33
						73							29	28				24	23		21				
																								2	
SALEABLE	NOT APPLICABLE	34566-1073	0	A	BLACK	72	71	70	69	68	67	66	65	64	63		61		59	58	57	56		54	
								50	49	48	47					42	41			38	37	36		34	33
						73				32	31	30	29	28	27	26		24	23			20	19	18	
										16			13	12	11	10	9								
SALEABLE	NOT APPLICABLE	34566-1083	0	B	ST GRY					68	67	66	65	64					59	58	57		55	54	53
							51	50	49	48		46	45		43	42	41	40	39	38	37		35		33
						73				32	31	30				26		24	23	22		20			
										16			13			10	9	8	7	6	5	4	3	2	
SALEABLE	NOT APPLICABLE	34566-1093	0	A	BLACK			70		68	67	66								58		56	55	54	
									49		47			44	43	42	41		39		37	36		34	
						73					31	30			27		25	24			21	20	19	18	
													13							6	5	4	3		1
SALEABLE	NOT APPLICABLE	34566-1123	0	H	ST GRY			78						72	71	70	69	68	67	66	65	64	63		61
								58	57	56			53	52	51	50						44	43		41
						40			37		35	34	33	32		30	29		27	26				22	21
						20	19	18	17	16		14		12		10	9	8	7	6	5		3	2	1
SALEABLE	NOT APPLICABLE	34566-1133	0	A	BLACK			70		68	67	66					61			58	57		55	54	
									49		47		45	44	43	42	41		39		37			34	
						73				32		30			27		25	24			21	20	19	18	
													13		11					6	5		3		1

molex

MX123 52/66/73/80-WAY RECEPTACLE ASSY SEALED PIN OUT SHEET

STATUS	GM PART #	HRNS CONN ASSY			TPA	GROMMET CAP																			
		MATERIAL/PART NUMBER	WIRE DRESS OPTION	KEY OPTION Fp	COLOR OPTION Fp	NUMBERS INDICATE CAVITIES OPEN FOR CIRCUITS Fp																			
SALEABLE	NOT APPLICABLE	34566-1143	0	A	BLACK					68			65		63		61		59	58		56			53
						52		50			47						41			38	37	36	35	34	33
						73				32	31	30	29	28	27		25	24	23	22	21	20	19	18	17
										16	15	14	13	12	11	10	9								1
SALEABLE	NOT APPLICABLE	34566-1153	0	A	BLACK			70			67	66	65							58	57		55		
									49		47			44	43	42	41		39		37				
						73				32		30			27		25	24	23		21	20	19	18	
													13					8		6	5		3		1
SALEABLE	NOT APPLICABLE	34566-1163	0	H	ST GRY			78						72	71	70	69	68		66	65	64	63		61
						60	59	58	57	56			53	52		50						44	43		41
						40			37		35	34		32		30	29		27	26				22	21
						20	19	18	17	16			13	12				8		6	5		3	2	
SALEABLE	NOT APPLICABLE	34566-1173	0	A	BLACK	72	71		69	68			65	64	63	62	61	60	59	58		56		54	
						52		50	49	48	47		45			42	41			38	37	36		34	33
						73				32	31	30	29	28	27	26		24	23			20	19	18	17
										16			13	12	11	10	9								
SALEABLE	NOT APPLICABLE	34566-1183	0	B	ST GRY							66	65	64		62			59		57		55		53
									49	48	47			44		42			39		37		35		33
						73							29	28					23		21				17
														12			9		7						
SALEABLE	NOT APPLICABLE	34566-1193	0	A	BLACK	72	71		69	68	67	66		64	63	62		60	59					54	53
						52			49	48		46		44	43	42			39					34	33
						73				32			29		27				23						17
												14	13	12	11		9	8	7	6	5	4	3	2	1
SALEABLE	NOT APPLICABLE	34566-1213	0	A	BLACK	72	71		69	68	67	66		64	63	62			59					54	53
						52				48		46		44	43	42			39						33
						73				32			29		27			24	23						17
												14	13	12	11		9	8			5	4	3	2	1
SALEABLE	NOT APPLICABLE	34566-1223	0	B	ST GRY						67	66	65		63	62			59		57		55		53
										48					43	42			39		37		35		33
						73							29		27	26			23		21				17
														12			9		7						
SALEABLE	NOT APPLICABLE	34566-1233	0	B	ST GRY								65			62			59		57		55		53
										48		46				42			39		37		35		33
						73							29			26			23		21				17
														12			9		7						
SALEABLE	NOT APPLICABLE	34566-1243	0	B	ST GRY														59		57		55		53
								50		48		46							39		37		35		33
						73							29						23		21				17
							15							12					7	6	5	4	3		
SALEABLE	NOT APPLICABLE	34566-1253	9	B	ST GRY								65					60	59		57		55		53
									49	48		46						40	39		37		35		33
						73												24	23		21				
																								2	
SALEABLE	NOT APPLICABLE	34566-1263	9	A	BLACK	NUMBERS IN BOLD MUST USE SAE WIRE MEETING SAE J1128, WIRE SIZE (NO.20) OR (NO.18 MAX. O.D. OF 2.06 MM) PER G.M. DRAWING NUMBER 12582682.																			
						72	71		69	68	67	66		64	63	62			59			56			53
								50		48		46		44	43	42			39			36	35		33
						73				32		30	29		27			24	23			20			17
												14	13	12	11		9	8			5	4	3	2	1
SALEABLE	NOT APPLICABLE	34566-1273	0	A	BLACK			70	69	68			65	64	63		61		59	58	57	56			
						52		50	49	48	47						41			38	37	36		34	33
						73				32	31	30	29	28	27			24	23			20	19	18	
										16			13	12	11	10	9								1
SALEABLE	NOT APPLICABLE	34566-1283	0	A	BLACK	72	71	70	69	68		66	65	64	63		61		59	58	57	56		54	
						52		50	49	48	47					42	41			38	37	36		34	33
						73				32	31	30	29	28	27	26		24	23			20	19	18	
										16			13	12	11	10	9								

molex

MX123 52/66/73/80-WAY RECEPTACLE ASSY SEALED PIN OUT SHEET

STATUS	GM PART #	HRNS CONN ASSY			TPA	GROMMET CAP																			
		MATERIAL/PART NUMBER	WIRE DRESS OPTION	KEY OPTION Fp	COLOR OPTION Fp	NUMBERS INDICATE CAVITIES OPEN FOR CIRCUITS Fp																			
SALEABLE	NOT APPLICABLE	34566-1293	0	A	BLACK					68			65		63		61		59	58		56			
						52		50			47						41			38	37	36		34	33
						73				32	31	30	29	28	27			24	23			20	19	18	17
										16			13	12	11	10	9								1
SALEABLE	NOT APPLICABLE	34566-1313	0	H	ST GRY	80		78						72	71	70	69	68		66	65	64	63		61
								58	57	56	55	54	53							46		44	43	42	
						40			37		35			32		30	29		27	26					21
						20	19	18	17		15			12				8		6	5		3	2	
SALEABLE	NOT APPLICABLE	34566-1323	0	A	BLACK	72	71	70	69	68	67	66	65	64	63	62		60	59	58	57	56	55	54	53
						52	51	50	49	48	47	46	45	44	43	42	41	40	39	38	37	36	35	34	33
						73				32	31	30	29	28	27		25	24	23	22	21	20	19	18	17
										16	15	14	13	12	11		9	8	7	6	5	4	3	2	1
SALEABLE	NOT APPLICABLE	34566-1333	0	A	BLACK			70	69	68			65	64					59	58		56			
						52		50	49		47						41			38	37	36		34	
						73				32	31	30	29	28	27				23			20	19	18	17
										16			13	12	11	10	9	8		6					1
SALEABLE	NOT APPLICABLE	34566-1343	0	A	BLACK	72	71		69		67		65	64	63				59	58	57	56			
								50	49	48	47						41			38	37	36		34	
						73				32	31	30	29	28	27				23			20	19	18	17
										16			13	12	11	10	9		7	6		4	3		1
SALEABLE	NOT APPLICABLE	34566-1353	0	H	ST GRY		79	78	77	76	75	74	73	72	71	70	69	68		66	65	64	63		61
						60	59	58	57	56			53			50						44	43		41
						40	39	38	37		35	34		32		30	29		27	26				22	21
						20	19	18	17				13	12	11			8		6	5		3	2	
SALEABLE	NOT APPLICABLE	34566-1363	0	A	BLACK	72	71		69	68	67	66		64	63	62			59						53
										48		46		44	43	42			39						33
						73				32			29		27			24	23						17
												14	13	12	11		9	8			5	4	3	2	1
SALEABLE	NOT APPLICABLE	34566-1373	0	B	ST GRY							66	65			62			59		57		55		53
										48		46				42			39		37		35		33
						73							29			26			23		21				17
														12			9		7						
SALEABLE	NOT APPLICABLE	34566-1383	0	B	ST GRY								65						59	58	57		55		53
									49	48	47	46							39	38	37		35		33
						73							29						23	22	21				17
														12					7						
SALEABLE	NOT APPLICABLE	34566-1393	0	A	BLACK			70			67	66					61			58	57		55	54	
											47		45	44	43	42	41		39		37			34	
						73				32		30			27		25	24			21	20	19	18	
													13		11					6	5		3		1
SALEABLE	NOT APPLICABLE	34566-1423	0	B	ST GRY					68	67	66	65				61	60	59	58	57			54	53
							51	50	49	48	47	46	45		43	42	41	40	39	38	37		35	34	33
						73				32	31	30				26		24	23	22	21	20			
										16	15	14	13			10	9	8	7	6	5	4			
SALEABLE	NOT APPLICABLE	34566-1433	0	B	ST GRY							66		64					59		57		55		53
									49	48		46							39		37		35		33
						73				32			29						23		21			18	17
														12					7						
SALEABLE	NOT APPLICABLE	34566-1443	0	B	ST GRY				69	68		66							59		57		55		53
									49	48		46							39		37		35		33
						73							29						23		21				17
														12	11	10			7						
SALEABLE	NOT APPLICABLE	34566-1453	0	B	ST GRY							66	65	64		62			59		57		55		53
									49	48	47			44		42			39		37		35		33
						73							29	28		26			23		21				17
														12			9		7						
SALEABLE	NOT APPLICABLE	34566-1463	0	A	BLACK				69	68			65	64	63	62	61	60	59	58		56			
						52		50	49	48	47		45				41			38	37	36		34	33
						73				32	31	30	29	28	27			24	23			20	19	18	17
										16			13	12	11	10	9								1

molex

MX123 52/66/73/80-WAY RECEPTACLE ASSY SEALED PIN OUT SHEET

STATUS	GM PART #	HRNS CONN ASSY			TPA	GROMMET CAP																				
		MATERIAL/PART NUMBER	WIRE DRESS OPTION	KEY OPTION Fp	COLOR OPTION Fp	NUMBERS INDICATE CAVITIES OPEN FOR CIRCUITS Fp																				
SALEABLE	NOT APPLICABLE	34566-1473	0	A	BLACK	72	71		69	68	67	66		64	63	62			59					54	53
						52			49	48		46		44	43	42			39					34	33
						73				32			29		27			24	23						17
												14	13	12	11		9	8	7	6	5	4	3	2	1
SALEABLE	NOT APPLICABLE	34566-1483	0	A	BLACK	72	71		69	68			65	64	63		61		59	58		56			
						52		50	49		47						41			38	37	36		34	33
						73				32	31	30	29	28	27			24	23			20	19	18	17
										16			13	12	11	10	9								1
SALEABLE	NOT APPLICABLE	34566-1493	0	B	ST GRY					68									59	58	57		55		53
									49	48		46							39	38	37		35		33
						73							29						23	22	21			18	17
														12	11	10			7						
SALEABLE	NOT APPLICABLE	34566-1513	0	B	ST GRY								65						59		57		55		53
									49	48		46							39		37		35		33
						73							29						23		21				17
														12					7						
SALEABLE	NOT APPLICABLE	34566-1523	0	A	BLACK			70	69	68			65	64					59	58		56		54	
						52		50	49		47					42	41			38	37	36		34	
						73				32	31	30	29	28	27	26			23			20	19	18	17
										16			13	12	11	10	9	8							1
SALEABLE	NOT APPLICABLE	34566-1533	0	A	BLACK	72	71	70	69	68			65	64	63		61		59	58	57	56			
						52	51	50	49		47						41			38	37	36		34	33
						73				32	31	30	29	28	27			24	23			20	19	18	17
										16			13	12	11	10	9						3	2	1
SALEABLE	NOT APPLICABLE	34566-1543	0	B	ST GRY				69	68		66							59		57		55		53
									49	48		46							39		37		35		33
						73							29						23		21				
															11	10			7						
SALEABLE	12582677	34566-1553	0	A	BLACK																				
						73																			
TOOL DESIGN SALEABLE	NOT APPLICABLE	34566-1563	9	A	BLACK																				
						73																			
TOOL DESIGN SALEABLE	NOT APPLICABLE	34566-1573	9	H	ST GRY																				
SALEABLE	NOT APPLICABLE	34566-1583	0	A	BLACK			70			67	66	65				61			58	57		55	54	
									49		47		45	44	43	42	41		39		37			34	
						73				32		30			27		25	24			21	20	19	18	17
											15		13		11		9	8		6	5		3		1
SALEABLE	NOT APPLICABLE	34566-1593	0	B	ST GRY						67		65				61	60	59	58	57			54	53
							51	50	49	48	47	46	45		43	42		40	39		37			34	33
						73				32	31	30				26		24	23	22	21	20			
										16	15	14	13			10	9	8	7	6	5	4			
SALEABLE	NOT APPLICABLE	34566-1613	0	H	ST GRY		79	78	77	76	75	74	73	72	71	70	69	68		66	65	64	63		61
						60	59	58	57	56			53			50						44	43		41
						40	39	38	37		35	34	33	32		30	29		27	26		24	23	22	21
						20	19	18	17			14	13	12	11	10	9	8		6	5		3	2	
SALEABLE	NOT APPLICABLE	34566-1623	0	B	ST GRY							66	65			62			59		57		55		53
										48	47					42			39		37		35		33
						73							29			26			23		21				17
														12			9		7						
SALEABLE	NOT APPLICABLE	34566-1633	0	B	ST GRY				69	68		66							59		57		55		53
								50		48	47								39		37		35		33
						73							29						23		21				17
											15			12	11	10			7	6	5	4	3		

molex

MX123 52/66/73/80-WAY RECEPTACLE ASSY SEALED PIN OUT SHEET

STATUS	GM PART #	HRNS CONN ASSY			TPA	GROMMET CAP																			
		MATERIAL/PART NUMBER	WIRE DRESS OPTION	KEY OPTION Fp	COLOR OPTION Fp	NUMBERS INDICATE CAVITIES OPEN FOR CIRCUITS Fp																			
SALEABLE	NOT APPLICABLE	34566-1643	0	B	ST GRY				69	68		66							59		57		55		53
								50		48		46							39		37		35		33
						73							29						23		21				17
											15			12	11	10			7	6	5	4	3		
SALEABLE	NOT APPLICABLE	34566-1653	0	B	ST GRY							66							59		57		55		53
								50		48		46							39		37		35		33
						73							29						23		21				17
											15			12					7	6	5	4	3		
SALEABLE	NOT APPLICABLE	34566-1663	0	B	ST GRY							66							59		57		55		53
								50		48		46							39		37		35		33
						73							29						23		21				
											15								7	6	5	4	3		
SALEABLE	NOT APPLICABLE	34566-1673	0	A	BLACK	72	71	70	69	68	67	66	65	64	63	62		60	59				55	54	53
		52			49	48							45	44	43	42	41	40	39				35	34	33
		73				32							29		27		25	24	23				19	18	17
						16							13	12	11		9	8	7	6	5	4	3	2	1
SALEABLE	NOT APPLICABLE	34566-1683	0	B	ST GRY						67	66			63				59	58	57	56	55		53
								50	49	48					43				39	38	37	36	35		33
		73											29		27				23	22	21				
						16	15	14		13								8	7	6	5	4	3		
SALEABLE	NOT APPLICABLE	34566-1693	0	B	ST GRY							66		64					59		57		55		53
									49	48		46							39		37		35		33
		73				32							29						23		21				17
														12					7						
SALEABLE	NOT APPLICABLE	34566-1713	0	B	ST GRY		71	70		68		66	65	64	63			60	59	58	57	56	55	54	53
			51	50	49	48						46	45		43		41	40	39	38	37	36	35		33
		73				32	31	30										24	23	22		20	19		
						16	15		13	12	11	10	9	8	7	6	5	4	3	2				
SALEABLE	NOT APPLICABLE	34566-1723	0	B	ST GRY		71	70		68		66	65					60	59	58	57			54	53
			51	50	49	48		46	45		43		41	40	39	38	37	36	35		33
		73				32	31	30						24	23	22		20			
						16	15		13	12	11	10	9	8	7	6	5	4			
SALEABLE	NOT APPLICABLE	34566-1733	0	A	BLACK			70		68	67	66	65							58	57		55		
					49		47			44	43	42	41		39		37		35		
		73				32		30			27		25	24			21	20	19	18	17
						16	15		13			10	9	8		6	5		3	2	1
SALEABLE	NOT APPLICABLE	34566-1743	0	A	BLACK			70			67	66	65							58	57		55		
					49		47			44	43	42	41		39		37		35		
		73				32		30			27		25	24			21	20	19	18	17
						16	15		13			10	9	8		6	5		3	2	1
SALEABLE	NOT APPLICABLE	34566-1753	0	A	BLACK			70			67	66	65							58	57		55		
					49		47			44	43	42	41		39		37		35		
		73				32					27		25	24			21	20	19	18	17
							15		13				9	8		6	5		3		1
SALEABLE	NOT APPLICABLE	34566-1763	0	B	ST GRY						67		65				61	60	59	58	57			54	53
			51	50	49	48	47	46	45		43			40	39		37			34	33
		73				32	31	30				26		24	23	22	21	20			
						16	15	14	13			10	9	8	7	6	5	4			
SALEABLE	NOT APPLICABLE	34566-1773	0	C	BLUE	72		70			67	66			63	62			59		57				53
		52	51					46		44		42		40	39					34	33
		73						30			27	26	25			22	21	20			
							15	14				10	9			6	5	4			
SALEABLE	NOT APPLICABLE	34566-1783	0	C	BLUE	72		70			67	66			63	62			59		57				53
		52	51					46		44		42		40	39					34	33
		73						30				26	25			22	21	20			
							15	14				10	9			6	5	4			
SALEABLE	NOT APPLICABLE	34566-1793	0	A	BLACK				69						63	62	61			58	57	56	55	54	53
		52	51		49					44	43	42	41					37	36	35	34	33
		73				32			29	28	27	26								19	18	
						16			13	12	11	10								3		

molex

MX123 52/66/73/80-WAY RECEPTACLE ASSY SEALED PIN OUT SHEET

STATUS	GM PART #	HRNS CONN ASSY			TPA	GROMMET CAP																			
		MATERIAL/PART NUMBER	WIRE DRESS OPTION	KEY OPTION Fp	COLOR OPTION Fp	NUMBERS INDICATE CAVITIES OPEN FOR CIRCUITS Fp																			
SALEABLE	NOT APPLICABLE	34566-1813	0	B	ST GRY	72	71	70		68	67	66				62	61	60	59	58	57	56	55	54	53
						52	51	50		48	47	46				42	41	40	39	38	37	36	35	34	33
						73				32	31	30	29	28	27	26	25	24	23						
										16	15	14	13			10	9	8							
SALEABLE	NOT APPLICABLE	34566-1823	0	A	BLACK	72	71	70	69	68		66	65	64			61		59	58		56		54	53
						52		50	49		47					42	41			38	37	36		34	33
						73				32	31	30	29	28	27	26		24	23	22	21	20	19	18	17
										16			13	12	11	10	9	8							1
SALEABLE	NOT APPLICABLE	34566-1833	0	A	BLACK					68			65		63		61		59	58		56			
						52		50			47						41			38	37	36		34	33
						73				32	31	30	29	28	27		25	24	23			20	19	18	17
										16			13	12	11	10									1
SALEABLE	NOT APPLICABLE	34566-1843	0	A	BLACK					68			65		63		61		59	58		56			53
						52		50			47						41			38	37	36	35	34	33
						73				32	31	30	29	28	27			24	23	22	21	20	19	18	17
										16	15	14	13	12	11	10									1
SALEABLE	NOT APPLICABLE	34566-1853	0	A	BLACK	72		70	69	68	67		65		63		61	60			57	56	55	54	53
						52		50	49	48	47			44	43		41	40			37	36	35	34	33
						73						30	29	28			25	24			21	20	19	18	17
										16	15				11	10	9	8	7	6	5	4	3	2	1
SALEABLE	NOT APPLICABLE	34566-1863	0	B	ST GRY					68	67	66	65	64	63										
												46	45		43										
						73				32		30	29	28	27										17
										16						10									
SALEABLE	NOT APPLICABLE	34566-1873	0	C	BLUE	72		70			67	66			63	62			59		57				53
						52	51					46		44		42		40	39					34	33
						73				32		30			27	26	25			22	21	20			
											15	14				10	9			6	5	4			
SALEABLE	NOT APPLICABLE	34566-1883	0	A	BLACK			70		68	67	66	65							58	57		55		
									49		47			44	43	42	41	40	39		37		35		
						73				32		30			27		25	24			21	20	19	18	17
										16	15		13			10	9	8		6	5		3	2	1
SALEABLE	NOT APPLICABLE	34566-1893	0	C	BLUE	72		70				66			63				59		57				53
						52	51					46		44		42		40	39					34	33
						73				32		30			27	26	25			22	21	20			
											15	14				10	9			6	5	4			
SALEABLE	NOT APPLICABLE	34566-1913	0	B	ST GRY	72		70		68		66						60	59				55	54	53
						52		50		48		46						40	39				35	34	33
						73				32	31	30	29	28	27	26	25	24							
										16						10	9	8							
SALEABLE	NOT APPLICABLE	34566-1923	0	A	BLACK				69						63					58		56	55	54	53
						52	51		49					44	43	42	41					36	35	34	33
						73				32				28		26							19	18	
										16				12		10							3		
SALEABLE	NOT APPLICABLE	34566-1933	0	A	BLACK			70			67	66	65							58	57		55		
									49		47			44	43	42	41	40	39		37		35		
						73				32		30			27		25	24			21	20	19	18	17
										16	15		13			10	9	8		6	5		3	2	1
SALEABLE	NOT APPLICABLE	34566-1943	0	A	BLACK			70			67	66	65							58	57		55		
							51		49		47			44	43	42	41	40	39		37		35		
						73				32		30			27		25	24			21	20	19	18	17
										16	15		13			10	9	8		6	5		3	2	1
SALEABLE	NOT APPLICABLE	34566-1953	0	C	BLUE	72		70				66			63				59		57				53
						52	51			48	47	46		44		42		40	39					34	33
						73						30				26	25			22	21	20			
											15	14				10	9			6	5	4			
SALEABLE	NOT APPLICABLE	34566-1963	0	C	BLUE	72		70				66			63				59		57				53
						52	51					46		44		42		40	39					34	33
						73						30				26	25			22	21	20			
											15	14				10	9			6	5	4			

MX123 52/66/73/80-WAY RECEPTACLE ASSY SEALED PIN OUT SHEET

STATUS	GM PART #	HRNS CONN ASSY			TPA	GROMMET CAP																			
		MATERIAL/PART NUMBER	WIRE DRESS OPTION	KEY OPTION Fp	COLOR OPTION Fp	NUMBERS INDICATE CAVITIES OPEN FOR CIRCUITS Fp																			
SALEABLE	NOT APPLICABLE	34566-1973	0	A	BLACK				69					63							56	55	54	53	
						52	51		49					44	43	42	41					36	35	34	33
						73				32				28		26			23		21		19	18	
										16				12		10		8			5		3		
SALEABLE	NOT APPLICABLE	34566-1983	0	B	ST GRY																				
						73																			
SALEABLE	NOT APPLICABLE	34566-1993	0	C	BLUE																				
						73																			
SALEABLE	NOT APPLICABLE	34566-2013	0	A	BLACK		71	70					65					60	59	58	57			54	53
							51	50	49	48		46	45		43		41	40	39		37	36	35		33
						73				32	31	30						24	23	22		20			
										16	15		13	12	11	10	9	8	7	6	5	4			
SALEABLE	NOT APPLICABLE	34566-2023	0	A	BLACK			70		68	67	66	65							58	57		55		
									49		47			44	43	42	41		39		37		35		
						73				32		30			27		25	24			21	20	19	18	17
											15		13				9	8		6	5		3		1
SALEABLE	NOT APPLICABLE	34566-2033	0	A	BLACK		71	70					65	64				60	59	58	57		55	54	53
							51	50	49	48		46	45		43		41	40	39		37	36	35		33
						73				32	31	30						24	23	22		20			
										16	15		13	12	11	10	9	8	7	6	5	4	3	2	
SALEABLE	NOT APPLICABLE	34566-2043	0	A	BLACK			70			67	66	65							58	57		55		
									49		47			44	43	42	41		39		37		35		
						73				32		30			27		25	24			21	20	19	18	17
											15		13				9	8		6	5		3		1
SALEABLE	NOT APPLICABLE	34566-2053	0	B	ST GRY			70		68	67	66	65							58	57		55		
									49		47			44	43	42	41		39		37				
						73				32		30			27		25	24	23		21	20	19	18	
													13					8		6	5		3		1
SALEABLE	NOT APPLICABLE	34566-2063	0	H	ST GRY			78						72	71	70	69	68		66	65	64	63		61
								58	57	56			53	52		50						44	43		41
						40			37		35	34		32		30	29		27	26				22	21
						20	19	18	17	16		14		12		10	9	8		6	5		3	2	
SALEABLE	NOT APPLICABLE	34566-2073	0	H	ST GRY			78						72	71	70	69	68		66	65	64	63		61
								58	57	56			53	52		50						44	43		41
						40			37		35	34		32		30	29		27	26				22	21
						20	19	18	17	16				12				8		6	5		3	2	
SALEABLE	NOT APPLICABLE	34566-2083	0	H	ST GRY			78						72	71	70	69	68	67	66	65	64	63		61
								58	57	56			53	52	51	50						44	43		41
						40			37		35	34		32		30	29		27	26				22	21
						20	19	18	17	16				12				8	7	6	5		3	2	1
SALEABLE	NOT APPLICABLE	34566-2093	0	A	BLACK					68			65		63		61		59	58		56			
						52		50			47						41			38	37	36		34	33
						73				32	31	30	29	28	27		25	24	23			20	19	18	17
										16			13	12	11	10	9								1
SALEABLE	NOT APPLICABLE	34566-2113	0	H	ST GRY		79	78	77	76	75	74	73	72	71	70	69	68		66	65	64	63		61
						60	59	58	57	56	55		53	52		50						44	43	42	41
						40	39	38	37		35	34	33	32		30	29		27	26				22	21
						20	19	18	17	16		14	13	12	11	10	9	8		6	5		3	2	
SALEABLE	NOT APPLICABLE	34566-2123	0	H	ST GRY		79	78	77	76	75	74	73	72	71	70	69	68		66	65	64	63		61
						60	59	58	57	56	55		53	52		50						44	43	42	41
						40	39	38	37		35	34	33	32		30	29		27	26				22	21
						20	19	18	17	16			13	12				8		6	5		3	2	
SALEABLE	NOT APPLICABLE	34566-2133	0	B	ST GRY		71	70					65	64				60	59	58	57		55	54	53
							51	50	49	48		46	45		43		41	40	39		37	36	35		33
						73				32	31	30						24	23	22		20			
										16	15		13	12	11	10	9	8	7	6	5	4	3	2	

molex

MX123 52/66/73/80-WAY RECEPTACLE ASSY SEALED PIN OUT SHEET

STATUS	GM PART #	HRNS CONN ASSY			TPA	GROMMET CAP																			
		MATERIAL/PART NUMBER	WIRE DRESS OPTION	KEY OPTION Fp	COLOR OPTION Fp	NUMBERS INDICATE CAVITIES OPEN FOR CIRCUITS Fp																			
SALEABLE	NOT APPLICABLE	34566-2143	0	B	ST GRY		71	70					65					60	59	58	57			54	53
							51	50	49	48		46	45		43		41	40	39		37	36	35		33
						73				32	31	30						24	23	22		20			
										16	15		13	12	11	10	9	8	7	6	5	4			
SALEABLE	NOT APPLICABLE	34566-2153	0	A	BLACK			70		68	67	66	65							58	57		55		
									49		47			44	43	42	41		39		37				
						73				32		30			27		25	24	23		21	20	19	18	
													13					8		6	5		3		1
SALEABLE	NOT APPLICABLE	34566-2163	0	A	BLACK			70			67	66					61			58			55	54	
									49		47		45	44	43	42	41		39		37			34	
						73				32					27			24			21	20	19	18	17
											15		13		11		9			6	5		3		1
SALEABLE	NOT APPLICABLE	34566-2173	0	A	BLACK			70			67	66	65				61			58			55	54	
									49		47		45	44	43	42	41		39		37			34	
						73				32		30			27		25	24			21	20	19	18	17
											15		13		11		9	8		6	5		3		1
SALEABLE	NOT APPLICABLE	34566-2183	0	A	BLACK			70			67	66								58	57		55		
									49		47			44	43	42	41		39		37				
						73				32					27			24			21	20	19	18	17
											15		13				9			6	5		3		1
SALEABLE	NOT APPLICABLE	34566-2193	0	A	BLACK			70			67	66	65							58	57		55		
									49		47			44	43	42	41		39		37				
						73				32		30			27		25	24			21	20	19	18	17
											15		13				9	8		6	5		3		1
SALEABLE	NOT APPLICABLE	34566-2213	9	H	ST GRY		79	78	77	76	75	74	73	72	71	70	69	68		66	65	64	63		61
						60	59	58	57	56			53			50						44	43		41
						40	39	38	37		35	34	33	32		30	29		27	26		24	23	22	21
						20	19	18	17			14	13	12	11	10	9	8		6	5		3	2	
SALEABLE	NOT APPLICABLE	34566-2223	0	A	BLACK	72	71	70	69	68	67	66		64	63	62		60	59				55	54	53
						52			49	48		46		44	43	42		40	39				35	34	33
						73				32			29		27			24	23				19	18	17
										16		14	13	12	11		9	8	7	6	5	4	3	2	1
SALEABLE	NOT APPLICABLE	34566-2233	0	A	BLACK				69						63					58		56		54	
						52	51		49					44	43	42	41					36	35	34	33
						73				32				28		26							19	18	
										16				12		10							3		
SALEABLE	NOT APPLICABLE	34566-2243	0	H	ST GRY		79	78	77	76	75	74	73	72	71	70	69	68		66	65	64	63		61
						60	59	58	57	56			53	52		50						44	43		41
						40	39	38	37		35	34	33	32		30	29		27	26		24	23	22	21
						20	19	18	17	16		14	13	12	11	10	9	8		6	5		3	2	
SALEABLE	NOT APPLICABLE	34566-2253	0	A	BLACK	72	71	70	69	68		66	65	64	63		61		59	58		56		54	53
						52		50	49		47					42	41			38	37	36		34	33
						73				32	31	30	29	28	27	26		24	23	22	21	20	19	18	17
										16			13	12	11	10	9	8							1
SALEABLE	NOT APPLICABLE	34566-2263	0	A	BLACK				69						63					58		56	55	54	53
						52	51	50	49					44	43	42	41					36	35	34	33
						73				32				28		26							19	18	
										16		14		12		10							3		
SALEABLE	NOT APPLICABLE	34566-2273	0	A	BLACK				69						63	62	61			58	57	56	55	54	53
						52	51	50	49					44	43	42	41				37	36	35	34	33
						73				32			29	28	27	26							19	18	
										16		14	13	12	11	10							3		
SALEABLE	NOT APPLICABLE	34566-2283	0	B	ST GRY					68	67	66	65	64	63								55		
									49	48		46	45	44	43										
						73				32		30	29	28	27										17
										16						10									
SALEABLE	NOT APPLICABLE	34566-2293	0	C	BLUE	72		70		68		66			63				59		57				53
						52	51			48	47	46		44		42		40	39					34	33
						73						30				26	25			22	21				
											15	14				10	9			6					

molex

MX123 52/66/73/80-WAY RECEPTACLE ASSY SEALED PIN OUT SHEET

STATUS	GM PART #	HRNS CONN ASSY			TPA	GROMMET CAP																			
		MATERIAL/PART NUMBER	WIRE DRESS OPTION	KEY OPTION Fp	COLOR OPTION Fp	NUMBERS INDICATE CAVITIES OPEN FOR CIRCUITS Fp																			
SALEABLE	NOT APPLICABLE	34566-2313	0	C	BLUE	72		70				66			63				59		57				53
						52	51					46		44		42		40	39					34	33
						73						30				26	25			22	21				
											15	14				10	9			6					
SALEABLE	NOT APPLICABLE	34566-2323	0	C	BLUE	72		70		68		66			63				59		57				53
						52	51			48	47	46		44		42		40	39					34	33
						73						30				26	25			22	21	20			
											15	14				10	9			6	5	4			
SALEABLE	NOT APPLICABLE	34566-2333	0	A	BLACK		71		69	68			65	64	63		61		59		57	56			
						52		50	49		47						41		39	38	37	36		34	33
						73				32	31	30	29	28	27			24	23	22		20	19	18	
										16			13	12	11	10	9								1
SALEABLE	NOT APPLICABLE	34566-2343	0	A	BLACK	72		70		68	67	66	65							58	57		55		
									49		47			44	43	42	41		39		37		35		
						73				32		30			27		25	24			21	20	19	18	17
											15	14	13				9	8		6	5		3		1
SALEABLE	NOT APPLICABLE	34566-2353	0	A	BLACK	72		70			67	66	65							58	57		55		
									49		47			44	43	42	41		39		37		35		
						73				32		30			27		25	24			21	20	19	18	17
											15	14	13				9	8		6	5		3		1
SALEABLE	NOT APPLICABLE	34566-2363	0	C	BLUE	72		70			67	66			63	62			59		57				53
						52	51					46		44		42		40	39	38				34	33
						73				32		30			27	26	25			22	21	20			
											15	14				10	9			6	5	4			
SALEABLE	NOT APPLICABLE	34566-2373	0	B	ST GRY					68	67	66	65	64			61	60	59	58	57		55	54	53
							51	50	49	48	47	46	45		43	42	41	40	39	38	37		35	34	33
						73				32	31	30				26		24	23	22	21	20			
										16	15	14	13			10	9	8	7	6	5	4	3	2	
SALEABLE	NOT APPLICABLE	34566-2383	0	B	ST GRY								65						59		57		55		53
								50	49	48		46							39		37		35		33
						73							29					24	23		21				
											15								7	6	5	4	3		
SALEABLE	NOT APPLICABLE	34566-2393	0	B	ST GRY														59		57		55		53
								50	49	48		46							39		37		35		33
						73							29						23		21				17
											15			12					7	6	5	4	3		
SALEABLE	NOT APPLICABLE	34566-2413	0	A	BLACK			70			67	66	65							58	57		55		
									49		47			44	43	42	41		39		37		35		
						73				32		30			27		25	24			21	20	19	18	17
											15	14	13				9	8		6	5		3		1
SALEABLE	NOT APPLICABLE	34566-2423	0	A	BLACK										63					58	57	56	55	54	53
						52	51		49					44	43	42	41					36	35	34	33
						73				32				28		26							19	18	
										16				12		10			7	6			3		
SALEABLE	NOT APPLICABLE	34566-2433	0	A	BLACK				69						63							56	55	54	53
						52	51		49					44	43	42	41					36	35	34	33
						73				32				28		26			23				19	18	
										16				12		10			7	6			3		
SALEABLE	NOT APPLICABLE	34566-2443	0	C	BLUE	72		70		68		66			63				59		57				53
						52	51			48	47	46		44				40	39					34	33
						73				32		30				26	25			22	21	20			
											15	14	13			10	9			6	5	4			
SALEABLE	NOT APPLICABLE	34566-2453	0	A	BLACK		71		69				65	64	63					58	57	56	55	54	53
						52	51		49				45	44	43	42	41				37	36	35	34	33
						73				32		30		28		26			23				19	18	
										16				12		10			7	6			3		
SALEABLE	NOT APPLICABLE	34566-2463	0	A	BLACK		71		69				65	64	63						57	56	55	54	53
						52	51		49				45	44	43	42	41				37	36	35	34	33
						73				32		30	29	28		26			23				19	18	
										16				12		10			7	6			3		

molex

MX123 52/66/73/80-WAY RECEPTACLE ASSY SEALED PIN OUT SHEET

STATUS	GM PART #	HRNS CONN ASSY			TPA	GROMMET CAP																			
		MATERIAL/PART NUMBER	WIRE DRESS OPTION	KEY OPTION Fp	COLOR OPTION Fp	NUMBERS INDICATE CAVITIES OPEN FOR CIRCUITS Fp																			
SALEABLE	NOT APPLICABLE	34566-2473	0	A	BLACK			70		68	67	66	65							58	57		55		
									49		47			44	43	42	41		39		37		35		
						73				32		30			27		25	24			21	20	19	18	17
											15	14	13				9	8		6	5		3		1
SALEABLE	NOT APPLICABLE	34566-2483	0	A	BLACK				69						63	62	61			58	57	56	55	54	53
						52	51		49					44	43	42	41				37	36	35	34	33
						73				32			29	28	27	26			23				19	18	
										16			13	12	11	10		8					3		
SALEABLE	NOT APPLICABLE	34566-2493 SAME AS P/N 34566-3863	0	B	ST GRY	72	71	70		68	67	66				62	61	60	59	58	57	56	55	54	53
						52	51	50		48	47	46				42	41	40	39	38	37	36	35	34	33
						73				32	31	30	29	28	27	26	25	24							17
										16	15	14	13			10		8						2	1
SALEABLE	NOT APPLICABLE	34566-2513	0	C	BLUE	72		70		68	67	66			63	62			59		57				53
						52	51			48	47	46		44		42		40	39					34	33
						73				32		30			27	26	25			22	21	20			
											15	14				10	9			6	5	4			
SALEABLE	NOT APPLICABLE	34566-2523	0	A	BLACK	72	71	70	69	68	67	66	65	64	63	62		60	59				55	54	53
						52			49	48			45	44	43	42	41	40	39				35	34	33
						73				32			29	28	27		25	24	23				19	18	17
										16			13	12	11		9	8	7	6	5	4	3	2	1
SALEABLE	NOT APPLICABLE	34566-2533	0	B	ST GRY						67	66	65		63				59	58	57	56	55		53
								50	49	48		46	45		43				39	38	37	36	35	34	33
						73							29		27				23	22	21			18	
										16	15	14	13					8	7	6	5	4	3		
SALEABLE	NOT APPLICABLE	34566-2543	0	C	BLUE	72		70				66			63				59		57				53
						52	51					46		44		42		40	39					34	33
						73				32		30			27	26	25			22	21				
											15	14				10	9			6					
SALEABLE	NOT APPLICABLE	34566-2553	9	B	ST GRY	72	71	70		68	67	66				62	61	60	59	58	57	56	55	54	53
						52	51	50		48	47	46				42	41	40	39	38	37	36	35	34	33
						73				32	31	30	29	28	27	26	25	24	23						
										16	15	14	13			10	9	8							
SALEABLE	NOT APPLICABLE	34566-2563	9	A	BLACK				69						63	62	61			58	57	56	55	54	53
						52	51	50	49					44	43	42	41				37	36	35	34	33
						73				32			29	28	27	26							19	18	
										16		14	13	12	11	10							3		
SALEABLE	NOT APPLICABLE	34566-2573	9	C	BLUE	72		70			67	66			63	62			59		57				53
						52	51					46		44		42		40	39					34	33
						73						30				26	25			22	21	20			
											15	14				10	9			6	5	4			
SALEABLE	NOT APPLICABLE	34566-2583	0	A	BLACK				69						63					58		56	55	54	53
						52	51	50	49					44	43	42	41		39			36	35	34	33
						73				32				28		26							19	18	
										16		14		12		10							3		
SALEABLE	NOT APPLICABLE	34566-2593	0	C	BLUE	72		70				66			63	62			59		57				53
						52	51					46		44		42		40	39					34	33
						73				32		30			27	26	25			22	21				
											15	14				10	9			6					
SALEABLE	NOT APPLICABLE	34566-2613	9	C	BLUE	72		70			67	66			63	62			59		57				53
						52	51					46		44		42		40	39					34	33
						73						30			27	26	25			22	21	20			
											15	14				10	9			6	5	4			
SALEABLE	NOT APPLICABLE	34566-2623	0	A	BLACK		71		69	68	67		65	64	63		61		59		57	56			
								50	49		47						41			38	37	36		34	33
						73				32	31	30	29	28	27			24	23			20	19	18	
										16			13	12	11	10	9		7			4			
SALEABLE	NOT APPLICABLE	34566-2633	0	A	BLACK		71		69	68	67		65	64			61		59		57	56			
								50	49		47						41			38	37	36			33
						73				32	31	30	29	28	27			24	23			20	19	18	
										16					11	10	9		7			4			

molex

MX123 52/66/73/80-WAY RECEPTACLE ASSY SEALED PIN OUT SHEET

STATUS	GM PART #	HRNS CONN ASSY			TPA	GROMMET CAP																			
		MATERIAL/PART NUMBER	WIRE DRESS OPTION	KEY OPTION Fp	COLOR OPTION Fp	NUMBERS INDICATE CAVITIES OPEN FOR CIRCUITS Fp																			
SALEABLE	NOT APPLICABLE	34566-2643	0	A	BLACK		71		69	68	67		65	64	63		61		59		57	56			
								50	49		47						41		39	38	37	36		34	33
						73				32	31	30	29	28	27			24	23	22		20	19	18	
										16			13	12	11	10	9		7			4			
SALEABLE	NOT APPLICABLE	34566-2653	0	A	BLACK		71		69	68	67		65	64			61		59		57	56			
								50	49		47						41		39	38	37	36			33
						73				32	31	30	29	28	27			24	23	22		20	19	18	
										16					11	10	9		7			4			
SALEABLE	NOT APPLICABLE	34566-2663	0	H	ST GRY		79	78	77	76	75	74	73	72	71	70	69	68		66	65	64	63		61
						60	59	58	57	56			53			50						44	43		41
						40	39	38	37		35	34		32		30	29		27	26				22	21
						20	19	18	17				13	12				8		6	5		3	2	
SALEABLE	NOT APPLICABLE	34566-2673	0	H	ST GRY		79	78	77	76	75	74	73	72	71	70	69	68		66	65	64	63		61
						60	59	58	57	56			53	52		50						44	43		41
						40	39	38	37		35	34		32		30	29		27	26				22	21
						20	19	18	17	16			13	12				8		6	5		3	2	
SALEABLE	NOT APPLICABLE	34566-2683	0	H	ST GRY			78						72	71	70	69	68	67	66	65	64	63		61
						60	59	58	57	56			53	52	51	50		48	47			44	43		41
						40			37		35	34		32		30	29		27	26				22	21
						20	19	18	17	16			13	12				8	7	6	5	4	3	2	1
SALEABLE	NOT APPLICABLE	34566-2693	0	B	ST GRY		71	70		68		66	65					60	59	58	57			54	53
							51	50	49	48		46	45		43	42	41	40	39	38	37	36	35		33
						73				32	31	30						24	23	22		20			
										16	15		13	12	11	10	9	8	7	6	5	4			
SALEABLE	NOT APPLICABLE	34566-2713	0	A	BLACK				69	68			65	64	63		61	60	59	58		56			
						52		50	49		47						41			38	37	36		34	33
						73				32	31	30	29	28	27		25	24	23			20	19	18	17
										16			13	12	11	10	9								1
SALEABLE	NOT APPLICABLE	34566-2723	0	B	ST GRY		71	70		68		66	65	64	63			60	59	58	57	56	55	54	53
							51	50	49	48		46	45		43	42	41	40	39	38	37	36	35		33
						73				32	31	30						24	23	22		20	19		
										16	15		13	12	11	10	9	8	7	6	5	4	3	2	
SALEABLE	NOT APPLICABLE	34566-2733	0	A	BLACK			70		68	67	66	65							58	57		55		
									49		47			44	43	42	41		39		37				
						73				32		30			27		25	24	23		21	20	19	18	17
										16	15		13			10	9	8		6	5		3	2	1
SALEABLE	NOT APPLICABLE	34566-2743	0	C	BLUE	72		70			67	66			63	62			59		57				53
						52	51					46		44		42		40	39					34	33
						73				32		30				26	25			22	21	20			
											15	14				10	9			6	5	4			
SALEABLE	NOT APPLICABLE	34566-2753	0	A	BLACK										63	62	61			58	57	56	55	54	53
						52	51		49					44	43	42	41				37	36	35	34	33
						73				32			29	28	27	26							19	18	
										16	15		13	12	11	10							3		
SALEABLE	NOT APPLICABLE	34566-2763	0	B	ST GRY	72	71	70		68	67	66				62	61	60	59	58	57	56	55	54	53
						52	51	50		48	47	46				42	41	40	39	38	37	36	35	34	33
						73				32	31	30	29	28	27	26	25	24							
										16	15	14	13			10	9	8							
SALEABLE	NOT APPLICABLE	34566-2773	0	H	ST GRY																				61
													53												
														32											
						20											9				5				1
SALEABLE	NOT APPLICABLE	34566-2783	9	H	ST GRY																				61
													53												
														32											
						20											9				5				1
SALEABLE	NOT APPLICABLE	34566-2793	9	A	BLACK						67	66													
										48	47						41								
						73				32	31	30	29		27		25			22	21		19	18	17
										16	15	14	13		11	10	9	8	7	6	5	4	3		1

molex

MX123 52/66/73/80-WAY RECEPTACLE ASSY SEALED PIN OUT SHEET

STATUS	GM PART #	HRNS CONN ASSY			TPA	GROMMET CAP																				
		MATERIAL/PART NUMBER	WIRE DRESS OPTION	KEY OPTION Fp	COLOR OPTION Fp	NUMBERS INDICATE CAVITIES OPEN FOR CIRCUITS Fp																				
SALEABLE	NOT APPLICABLE	34566-2813	9	B	ST GRY	72	71	70	69	68	67	66	65	64		62	61	60	59	58	57	56	55	54		
						52	51	50	49	48		46		44				40			37	36				
						73				32	31	30	29	28	27		25	24			21	20		18		
										16		14	13	12	11	10	9		7	6		4	3	2		
SALEABLE	NOT APPLICABLE	34566-2823	0	A	BLACK						67	66														
											47						41									
						73				32	31	30	29		27		25			22	21		19	18	17	
										16	15	14	13			10	9	8	7	6	5	4	3			
SALEABLE	NOT APPLICABLE	34566-2833	0	B	ST GRY	72	71	70	69	68	67	66	65				61	60			57	56	55	54		
						52	51	50	49	48		46		44				40			37	36				
						73				32	31	30	29	28	27			24			21	20	19	18	17	
										16		14	13	12	11	10	9		7	6		4		2		
SALEABLE	NOT APPLICABLE	34566-2843	0	A	BLACK						67	66														
											47						41									
						73				32	31	30	29		27		25			22	21		19	18	17	
										16	15	14	13			10	9	8	7	6	5	4	3			1
SALEABLE	NOT APPLICABLE	34566-2853	0	B	ST GRY	72	71	70	69	68	67	66	65	64	63		61	60			57	56	55	54		
						52	51	50	49	48		46		44				40			37	36				
						73				32	31	30	29	28	27			24			21	20	19	18		
										16		14	13	12	11	10	9		7	6		4	3	2		
SALEABLE	NOT APPLICABLE	34566-2863	0	A	BLACK	72	71	70	69	68	67	66		64	63	62		60	59				55	54	53	
						52			49	48		46		44	43	42		40	39				35	34	33	
						73				32			29	28	27			24	23				19	18	17	
										16		14	13	12	11		9	8	7	6	5	4	3	2	1	
SALEABLE	NOT APPLICABLE	34566-2873	0	B	ST GRY	72	71	70	69	68	67	66							59	58	57	56	55		53	
						52	51	50	49	48	47								39	38	37	36	35		33	
						73													23	22	21					
											15				11	10		8		6	5	4	3			
SALEABLE	NOT APPLICABLE	34566-2883	0	A	BLACK			70	69						63	62	61			58	57	56	55	54	53	
						52	51		49					44	43	42	41				37	36		34		
						73				32			29	28	27	26							19	18		
										16			13	12	11	10							3			
SALEABLE	NOT APPLICABLE	34566-2893	0	A	BLACK	72			69		67		65		63			60			57	56			53	
									49		47	46		44	43			40			37	36	35		33	
						73					31	30	29	28				24			21	20			17	
										16	15	14	13		11	10					5	4	3	2	1	
SALEABLE	NOT APPLICABLE	34566-2913	0	B	ST GRY					68	67			64						58						
												46	45							38						
						73				32		30	29	28	27					22					17	
											15		13			10									1	
SALEABLE	NOT APPLICABLE	34566-2923	0	B	ST GRY					68	67			64												
												46	45													
						73				32		30	29	28	27										17	
											15		13			10										
SALEABLE	NOT APPLICABLE	34566-2933	0	A	BLACK	72			69		67		65		63			60			57	56			53	
									49		47			44	43			40			37	36	35		33	
						73					31	30	29	28				24			21	20			17	
										16	15	14			11	10					5	4	3	2	1	
SALEABLE	NOT APPLICABLE	34566-2943	0	B	ST GRY					68	67			64	63				59		57					
												46	45		43				39		37					
						73				32		30	29	28	27						21					
																10				6	5	4	3			
SALEABLE	NOT APPLICABLE	34566-2953	0	B	ST GRY					68	67			64	63				59							
												46	45		43				39					34		
						73				32		30	29	28	27											
																10				6	5	4	3			
SALEABLE	NOT APPLICABLE	34566-2963	0	H	ST GRY		79					74	73	72	71		69	68	67			64		62	61	
							59					54	53	52			49	48	47					42	41	
								38					33				29		27		25				21	
											15	14			11	10	9	8	7							

molex

MX123 52/66/73/80-WAY RECEPTACLE ASSY SEALED PIN OUT SHEET

STATUS	GM PART #	HRNS CONN ASSY			TPA	GROMMET CAP																			
		MATERIAL/PART NUMBER	WIRE DRESS OPTION	KEY OPTION Fp	COLOR OPTION Fp	NUMBERS INDICATE CAVITIES OPEN FOR CIRCUITS Fp																			
SALEABLE	NOT APPLICABLE	34566-2973	0	G	BLUE	80		78	77		75	74	73	72		70	69		67		65	64	63	62	
						60		58	57		55	54		52	51	50	49		47		45				
						40		38	37				33	32	31				27	26	25	24			
						20		18	17							10	9	8		6	5		3	2	1
SALEABLE	NOT APPLICABLE	34566-9913	0	A	BLACK	72	71			68	67	66	65	64					59						
								50		48	47	46	45					40	39	38					
						73					31	30					25	24		22	21	20			17
												14					9		7	6	5	4		2	1
SALEABLE	NOT APPLICABLE	34566-9923	0	A	BLACK	72	71				67	66				62	61	60			57		55	54	
							51			48		46	45	44	43	42			39				35		33
						73										26	25	24							
											15	14						8	7	6	5	4	3	2	
SALEABLE	NOT APPLICABLE	34566-9933	0	B	ST GRY				69				65	64	63										
									49				45	44	43										
						73														22	21	20	19	18	17
														12	11					6	5	4	3	2	1
SALEABLE	NOT APPLICABLE	34566-9943	0	C	BLUE		71		69				65	64			61	60		58		56	55	54	
								50	49				45		43		41				37	36	35		
						73					31		29	28				24	23				19	18	17
										16			13	12	11			8	7				3	2	1
SALEABLE	NOT APPLICABLE	34566-9953	0	A	BLACK						67					62		60			57		55		
							51			48		46	45	44	43				39				35		
						73											25								
											15	14							7	6	5	4	3	2	
SALEABLE	NOT APPLICABLE	34566-9963	0	B	ST GRY					68	67			64	63					58			55		
												46	45		43					38			35		
						73				32		30	29	28	27					22			19		17
											15		13			10									1
SALEABLE	NOT APPLICABLE	34566-9973	0	B	ST GRY					68	67			64	63					58					
												46	45		43					38					
						73				32		30	29	28	27					22					17
											15		13			10									
SALEABLE	NOT APPLICABLE	34566-2983	9	A	BLACK			70	69						63	62	61			58	57	56	55	54	53
						52	51		49					44	43	42	41				37	36		34	
						73				32			29	28	27	26							19	18	17
										16	15		13	12	11	10							3	2	1
SALEABLE	NOT APPLICABLE	34566-2993	9	B	ST GRY	72	71	70		68	67	66				62	61	60	59	58	57	56	55	54	53
						52	51	50		48	47	46				42	41	40	39	38	37	36	35	34	33
						73				32	31	30	29	28	27	26	25	24							
										16	15	14	13			10	9	8							
SALEABLE	NOT APPLICABLE	34566-3013	9	C	BLUE	72	71	70	69	68	67	66			63	62			59		57	56	55		53
						52	51					46		44		42		40	39	38				34	33
						73				32		30				26	25			22	21		19	18	
											15	14				10	9			6	5	4	3		
SALEABLE	NOT APPLICABLE	34566-3023	0	G	BLUE		79			76					71			68		66					61
							59			56			53					48		46		44	43	42	41
							39			36	35	34				30	29	28					23	22	21
							19			16	15	14	13	12	11				7			4			
SALEABLE	NOT APPLICABLE	34566-3033	0	H	ST GRY	80		78	77	76	75					70				66	65		63		
						60		58	57	56	55				51	50				46	45	44	43		
						40	39		37	36	35	34		32	31	30		28		26		24	23	22	
						20	19	18	17	16			13	12						6	5	4	3	2	1
SALEABLE	NOT APPLICABLE	34566-3043	0	C	BLUE	72		70		68		66			63	62			59		57				53
						52	51			48	47	46		44		42		40	39					34	33
						73				32		30			27	26	25			22	21	20			
											15	14	13			10	9			6	5	4			
SALEABLE	NOT APPLICABLE	34566-3053	0	C	BLUE	72		70		68		66			63	62			59		57				53
						52	51			48	47	46		44		42		40	39	38				34	33
						73				32		30			27	26	25			22	21	20			
											15	14	13			10	9			6	5	4			

molex

MX123 52/66/73/80-WAY RECEPTACLE ASSY SEALED PIN OUT SHEET

STATUS	GM PART #	HRNS CONN ASSY			TPA	GROMMET CAP																			
		MATERIAL/PART NUMBER	WIRE DRESS OPTION	KEY OPTION Fp	COLOR OPTION Fp	NUMBERS INDICATE CAVITIES OPEN FOR CIRCUITS Fp																			
SALEABLE	NOT APPLICABLE	34566-3063	0	A	BLACK		71		69				65	64	63			60		58	57	56	55	54	53
						52	51		49				45	44	43	42	41				37	36	35	34	33
						73				32		30		28		26							19	18	
										16				12		10							3		
SALEABLE	NOT APPLICABLE	34566-3073	0	A	BLACK		71		69				65	64	63			60			57	56	55	54	53
						52	51		49				45	44	43	42	41				37	36	35	34	33
						73				32		30		28		26			23				19	18	
										16				12		10		8	7	6			3		
SALEABLE	NOT APPLICABLE	34566-3083	0	A	BLACK		71		69				65	64	63			60		58	57	56	55	54	53
						52	51		49				45	44	43	42	41				37	36	35	34	33
						73				32		30		28		26							19	18	
										16					11	10							3		
SALEABLE	NOT APPLICABLE	34566-3093	0	A	BLACK		71		69					64	63	62		60			57	56	55	54	53
						52	51		49				45	44	43	42	41				37	36	35	34	33
						73				32		30		28		26			23				19	18	
										16				12		10							3		
SALEABLE	NOT APPLICABLE	34566-3113	0	A	BLACK		71		69				65	64	63			60			57	56	55	54	53
						52	51		49				45	44	43	42	41				37	36	35	34	33
						73				32		30		28		26			23		21		19	18	
										16				12		10		8			5		3		
SALEABLE	NOT APPLICABLE	34566-3123	0	B	ST GRY	72		70		68		66						60	59				55	54	53
						52		50		48		46						40	39				35	34	33
						73				32	31	30	29	28	27	26	25	24							
										16						10	9	8							
SALEABLE	NOT APPLICABLE	34566-3133	0	C	BLUE	72		70		68	67	66			63	62			59		57				53
						52	51			48	47	46		44		42		40	39					34	33
						73				32		30				26	25			22	21	20			
											15	14				10	9			6	5	4			
SALEABLE	NOT APPLICABLE	34566-3143	0	C	BLUE	72		70				66			63	62			59		57				53
						52	51					46		44		42		40	39		37	36		34	33
						73				32		30				26	25			22	21				
											15	14				10	9			6					
SALEABLE	NOT APPLICABLE	34566-3153	0	A	BLACK			70	69						63					58		56		54	
						52	51		49		47			44	43	42	41					36		34	
						73				32				28		26							19	18	
										16				12		10							3		
SALEABLE	NOT APPLICABLE	34566-3163	0	C	BLUE	72		70							63	62			59		57	56	55		53
						52	51					46		44		42		40	39		37	36		34	33
						73				32		30				26	25			22	21		19	18	
											15	14				10	9			6			3		
SALEABLE	NOT APPLICABLE	34566-3173	0	A	BLACK			70	69						63					58		56		54	
						52	51		49		47			44	43	42	41					36		34	
						73				32				28		26							19	18	17
										16				12		10							3	2	1
SALEABLE	NOT APPLICABLE	34566-3183	0	C	BLUE	72		70				66			63	62			59		57	56	55		53
						52	51					46		44		42		40	39					34	33
						73						30				26	25			22	21				
											15	14				10	9			6					
SALEABLE	NOT APPLICABLE	34566-3193	0	A	BLACK				69						63					58		56	55	54	53
						52	51		49					44	43	42	41					36	35	34	33
						73				32				28		26							19	18	17
										16				12		10							3	2	1
SALEABLE	NOT APPLICABLE	34566-3213	0	C	BLUE	72		70			67	66			63	62			59			56			53
						52	51					46		44		42		40						34	33
						73				32		30				26	25			22	21				
											15	14				10	9			6	5	4			
SALEABLE	NOT APPLICABLE	34566-3223	0	C	BLUE	72		70			67	66			63	62			59		57				53
						52	51					46		44		42		40	39					34	33
						73				32		30			27	26	25			22	21				
											15	14				10	9			6	5	4			

molex

MX123 52/66/73/80-WAY RECEPTACLE ASSY SEALED PIN OUT SHEET

STATUS	GM PART #	HRNS CONN ASSY			TPA	GROMMET CAP																				
		MATERIAL/PART NUMBER	WIRE DRESS OPTION	KEY OPTION Fp	COLOR OPTION Fp	NUMBERS INDICATE CAVITIES OPEN FOR CIRCUITS Fp																				
SALEABLE	NOT APPLICABLE	34566-3233	0	A	BLACK			70	69						63	62	61			58	57	56	55	54	53	
						52	51		49					44	43	42	41				37	36		34		
						73				32			29	28	27	26							19	18		
										16	15		13	12	11	10							3			
SALEABLE	NOT APPLICABLE	34566-3243	0	C	BLUE	72		70				66			63	62			59		57				53	
						52	51					46		44		42		40	39					34	33	
						73				32		30				26	25			22	21					
											15	14				10	9			6	5	4				
SALEABLE	NOT APPLICABLE	34566-3253	0	A	BLACK			70	69						63					58		56	55	54	53	
						52	51		49					44	43	42	41					36		34		
						73				32				28		26							19	18		
										16	15			12		10							3			
SALEABLE	NOT APPLICABLE	34566-3263	0	C	BLUE	72		70				66			63	62			59		57	56	55		53	
						52	51					46		44		42		40	39					34	33	
						73				32		30				26	25			22	21		19	18		
											15	14				10	9			6	5	4	3			
SALEABLE	NOT APPLICABLE	34566-3273	0	A	BLACK			70	69						63					58		56	55	54	53	
						52	51		49					44	43	42	41					36		34		
						73				32				28		26							19	18	17	
										16	15			12		10							3	2	1	
SALEABLE	NOT APPLICABLE	34566-3283	0	C	BLUE	72		70			67	66			63	62			59		57				53	
						52	51					46		44		42		40	39					34	33	
						73						30				26	25			22	21					
											15	14				10	9			6	5	4				
SALEABLE	NOT APPLICABLE	34566-3293	0	B	ST GRY	72	71	70		68	67	66				62	61	60	59	58	57	56	55	54	53	
						52	51	50		48	47					42	41	40	39	38	37	36	35	34	33	
						73				32	31	30	29	28	27	26	25	24	23							
										16	15	14	13			10	9	8								
SALEABLE	NOT APPLICABLE	34566-3313	0	C	BLUE	72		70							63	62			59		57				53	
						52	51					46		44		42		40	39					34	33	
						73				32		30				26	25			22	21					
											15	14								6	5	4				
SALEABLE	NOT APPLICABLE	34566-3323	0	B	ST GRY					68	67	66	65	64	63					58			55			
									49	48		46	45	44	43					38						
						73				32		30	29	28	27					22					17	
										16						10										
SALEABLE	NOT APPLICABLE	34566-3333	0	A	BLACK	72	71	70	69	68			65	64	63		61		59	58	57	56		54		
						52	51	50	49		47					42	41			38	37	36		34	33	
						73				32	31	30	29	28	27	26		24	23			20	19	18	17	
										16			13	12	11	10	9						3	2	1	
SALEABLE	NOT APPLICABLE	34566-3343	0	A	BLACK	72			69		67	66	65		63			60			57	56			53	
									49		47			44	43	42		40			37	36	35		33	
						73					31	30	29	28		26		24			21	20			17	
										16	15	14	13		11	10					5	4	3	2	1	
SALEABLE	NOT APPLICABLE	34566-3353	0	B	ST GRY					68	67			64					59	58				54		
												46	45						39	38						
						73				32		30	29	28	27				23	22					17	
														12		10		8							1	
SALEABLE	NOT APPLICABLE	34566-3363	0	A	BLACK		71		69	68			65	64	63		61		59		57	56		54		
						52		50	49		47					42	41	40	39	38	37	36		34	33	
						73				32	31	30	29	28	27	26		24	23	22		20	19	18		
										16			13	12	11	10	9								1	
SALEABLE	NOT APPLICABLE	34566-3373	9	C	BLUE	72		70		68	67	66			63	62			59		57	56	55		53	
						52	51			48	47	46		44		42		40	39	38				34	33	
						73				32		30				26	25			22	21		19	18		
											15	14				10	9			6	5	4	3			
SALEABLE	NOT APPLICABLE	34566-3383	0	A	BLACK			70	69	68			65	64	63		61		59	58	57	56		54		
						52		50	49	48	47					42	41			38	37	36		34	33	
						73				32	31	30	29	28	27	26		24	23			20	19	18		
										16			13	12	11	10	9								1	

molex

MX123 52/66/73/80-WAY RECEPTACLE ASSY SEALED PIN OUT SHEET

STATUS	GM PART #	HRNS CONN ASSY			TPA	GROMMET CAP																			
		MATERIAL/PART NUMBER	WIRE DRESS OPTION	KEY OPTION Fp	COLOR OPTION Fp	NUMBERS INDICATE CAVITIES OPEN FOR CIRCUITS Fp																			
SALEABLE	NOT APPLICABLE	34566-3393	0	C	BLUE	72		70		68	67	66			63	62			59		57				53
						52	51			48	47	46		44		42		40	39					34	33
						73				32		30				26	25			22	21				
											15	14				10	9			6	5	4			
SALEABLE	NOT APPLICABLE	34566-3413	0	A	BLACK	72		70			67	66	65				61			58	57		55	54	
								50	49		47		45	44	43	42	41		39		37		35		
						73				32		30			27	26	25	24			21	20	19	18	17
										16	15		13		11	10	9	8		6	5		3	2	1
SALEABLE	NOT APPLICABLE	34566-3423	9	C	BLUE				69						63					58		56	55	54	53
						52	51		49					44	43	42	41					36	35	34	33
						73				32				28		26							19	18	17
										16				12		10							3	2	1
SALEABLE	NOT APPLICABLE	34566-3433	9	C	BLUE	72		70				66			63	62			59		57	56	55		53
						52	51					46		44		42		40	39					34	33
						73						30				26	25			22	21				
											15	14				10	9			6					
SALEABLE	NOT APPLICABLE	34566-3443	0	A	BLACK		71		69				65	64	63			60			57	56	55	54	53
						52	51		49				45	44	43	42	41				37	36	35	34	33
						73				32		30		28		26			23				19	18	
										16				12		10							3		
SALEABLE	NOT APPLICABLE	34566-3453	0	A	BLACK												61								
						73																20			
																	9				5				1
SALEABLE	NOT APPLICABLE	34566-3463	9	H	ST GRY																				61
						20											9				5				1
SALEABLE	NOT APPLICABLE	34566-3473	9	B	ST GRY	72	71	70	69	68	67	66	65	64		62	61	60	59	58	57	56	55	54	
						52	51	50	49			46		44				40		38	37	36			
						73				32	31	30	29	28	27		25	24			21	20		18	17
										16	15	14	13	12		10	9		7	6	5	4	3	2	
SALEABLE	NOT APPLICABLE	34566-3483	0	B	ST GRY	72	71	70	69	68	67	66	65				61	60			57	56	55	54	
						52	51	50	49	48		46		44				40		38	37	36			
						73				32	31	30	29	28	27			24			21	20	19	18	17
										16	15	14	13	12	11	10	9		7	6	5	4		2	
SALEABLE	NOT APPLICABLE	34566-3493	0	A	BLACK	72		70			67	66	65				61			58	57		55	54	
									49		47		45	44	43	42	41		39		37		35		
						73				32		30			27	26	25	24			21	20	19	18	17
										16	15		13		11	10	9	8		6	5	4	3	2	
SALEABLE	NOT APPLICABLE	34566-3513	0	A	BLACK			70	69						63	62	61	60		58	57	56	55	54	53
						52	51		49					44	43	42	41				37	36		34	
						73				32			29	28	27	26							19	18	
										16	15		13	12	11	10							3		
SALEABLE	NOT APPLICABLE	34566-3523	0	A	BLACK	72		70				66			63	62						56	55	54	
						52			49						43	42						36	35	34	
						73					31			28		26					21	20	19	18	
										16	15			12		10	9				5			2	1
SALEABLE	NOT APPLICABLE	34566-3533	9	A	BLACK				69						63					58		56	55	54	53
						52	51		49					44	43	42	41					36	35	34	33
						73				32				28		26							19	18	17
										16				12		10							3	2	1
SALEABLE	NOT APPLICABLE	34566-3543	9	A	BLACK	72		70				66			63	62			59		57	56	55		53
						52	51					46		44		42		40	39					34	33
						73						30				26	25			22	21				
											15	14				10	9			6					
SALEABLE	NOT APPLICABLE	34566-3553	9	C	BLUE	72	71	70	69	68	67	66	65		63	62	61		59	58	57	56	55	54	53
							51	50	49	48		46	45	44	43	42	41	40	39	38		36	35	34	33
						73					31	30	29	28	27	26	25			22		20	19	18	17
										16	15	14			11	10	9		7	6	5		3	2	1

molex

MX123 52/66/73/80-WAY RECEPTACLE ASSY SEALED PIN OUT SHEET

STATUS	GM PART #	HRNS CONN ASSY			TPA	GROMMET CAP																			
		MATERIAL/PART NUMBER	WIRE DRESS OPTION	KEY OPTION Fp	COLOR OPTION Fp	NUMBERS INDICATE CAVITIES OPEN FOR CIRCUITS Fp																			
SALEABLE	NOT APPLICABLE	34566-3563	9	C	BLUE	72		70		68	67	66			63	62			59		57				53
						52	51			48	47	46		44		42		40	39	38				34	33
						73				32		30			27	26	25			22	21				
											15	14				10	9			6	5	4			
SALEABLE	NOT APPLICABLE	34566-3573	9	C	BLUE			70	69	68					63	62	61			58	57	56	55	54	53
						52	51	50	49	48	47			44	43	42	41				37	36		34	
						73				32			29	28	27	26							19	18	
										16	15	14	13	12	11	10							3		
SALEABLE	NOT APPLICABLE	34566-3583	9	A	BLACK			70	69						63	62	61			58	57	56	55	54	53
						52	51	50	49					44	43	42	41				37	36		34	
						73				32			29	28	27	26							19	18	
										16	15	14	13	12	11	10							3		
SALEABLE	NOT APPLICABLE	34566-3593	0	A	BLACK		71		69					64	63			60		58	57	56	55	54	53
						52	51		49				45	44	43	42	41				37	36	35	34	33
						73				32		30		28		26							19	18	
										16	15			12		10							3		
SALEABLE	NOT APPLICABLE	34566-3613	0	B	ST GRY					68	67			64	63				59						
												46	45		43				39						
						73				32		30	29	28	27										
																10				6	5	4	3		
SALEABLE	NOT APPLICABLE	34566-3623	0	A	BLACK	72		70	69						63	62	61	60	59	58	57	56	55	54	53
						52	51		49					44	43	42	41				37	36		34	
						73				32			29	28	27	26							19	18	
										16	15		13	12	11	10		8					3		
SALEABLE	NOT APPLICABLE	34566-3633	0	C	BLUE	72		70		68	67	66			63	62			59		57				53
						52	51			48	47	46		44				40	39	38	37	36		34	33
						73				32		30				26	25	24	23	22	21				
											15	14				10	9	8	7	6	5	4		2	
SALEABLE	NOT APPLICABLE	34566-3643	0	B	ST GRY	72	71	70		68	67	66		64	63				59						53
						52	51	50		48	47	46							39					34	33
						73				32	31	30	29	28	27	26	25	24							17
										16	15	14	13			10		8						2	1
SALEABLE	NOT APPLICABLE	34566-3653	0	B	ST GRY	72	71	70	69	68		66	65	64	63				59						53
						52	51	50	49	48	47	46	45	44	43				39					34	33
						73				32		30	29	28	27	26	25	24							17
										16		14	13	12	11	10		8					3	2	1
SALEABLE	NOT APPLICABLE	34566-3663	0	A	BLACK	72		70	69						63	62	61	60	59	58	57	56	55	54	53
						52	51		49					44	43	42	41				37	36		34	
						73				32			29	28	27	26							19	18	
										16	15		13	12	11	10			7	6			3		
SALEABLE	NOT APPLICABLE	34566-3673	9	C	BLUE		71	70	69	68	67		65		63	62	61		59	58	57	56	55	54	53
							51	50	49	48			45	44	43	42	41	40	39	38		36	35	34	33
						73					31	30	29	28	27	26				22		20	19	18	17
										16	15	14					9		7	6	5		3	2	1
SALEABLE	NOT APPLICABLE	34566-3683	9	H	ST GRY																				61
														32											
						20					15						9				5				1
SALEABLE	NOT APPLICABLE	34566-3693	0	C	BLUE	72		70		68	67	66			63	62			59		57				53
						52	51			48	47	46		44		42		40	39	38				34	33
						73				32		30			27	26	25			22	21				
											15	14				10	9			6	5	4			
SALEABLE	NOT APPLICABLE	34566-3713	0	C	BLUE	72		70		68	67	66			63	62			59		57				53
						52	51			48	47	46		44		42		40	39					34	33
						73				32		30			27	26	25			22	21				
											15	14				10	9			6	5	4			
SALEABLE	NOT APPLICABLE	34566-3723	0	A	BLACK			70	69						63	62	61			58	57	56	55	54	53
						52	51	50	49					44	43	42	41				37	36		34	
						73				32			29	28	27	26							19	18	
										16	15	14	13	12	11	10							3		

molex

MX123 52/66/73/80-WAY RECEPTACLE ASSY SEALED PIN OUT SHEET

STATUS	GM PART #	HRNS CONN ASSY			TPA	GROMMET CAP																			
		MATERIAL/PART NUMBER	WIRE DRESS OPTION	KEY OPTION Fp	COLOR OPTION Fp	NUMBERS INDICATE CAVITIES OPEN FOR CIRCUITS Fp																			
SALEABLE	NOT APPLICABLE	34566-3733	0	B	ST GRY	72	71	70		68	67	66				62	61	60	59	58	57	56	55	54	53
						52	51	50		48	47	46				42	41	40	39	38	37	36	35	34	33
						73				32	31	30	29	28	27	26	25	24	23						
										16	15	14	13			10	9	8							
SALEABLE	NOT APPLICABLE	34566-3743	0	C	BLUE	72		70		68		66			63	62			59		57				53
						52	51			48	47	46		44		42		40	39	38				34	33
						73				32		30			27	26	25			22	21				
											15	14				10	9			6	5	4			
SALEABLE	NOT APPLICABLE	34566-3753	0	C	BLUE	72		70		68		66			63	62			59		57				53
						52	51			48	47	46		44		42		40	39					34	33
						73				32		30			27	26	25			22	21				
											15	14				10	9			6	5	4			
SALEABLE	NOT APPLICABLE	34566-3763	0	C	BLUE	72		70		68		66			63	62			59		57	56	55		53
						52	51			48	47	46		44		42		40	39					34	33
						73				32		30			27	26	25			22	21				
											15	14				10	9			6	5	4			
SALEABLE	NOT APPLICABLE	34566-3773	0	A	BLACK			70	69						63					58		56	55	54	53
						52	51	50	49					44	43	42	41		39			36		34	
						73				32				28		26							19	18	
										16	15	14		12		10							3		
SALEABLE	NOT APPLICABLE	34566-3783	0	A	BLACK			70	69						63					58		56	55	54	53
						52	51	50	49					44	43	42	41		39			36		34	
						73				32				28		26							19	18	17
										16	15	14		12		10							3	2	1
SALEABLE	NOT APPLICABLE	34566-3793	0	A	BLACK		71	70						64	63			60		58	57	56	55	54	53
						52	51		49				45	44	43	42	41				37	36		34	
						73				32		30		28		26			23		21		19	18	
										16	15			12		10		8			5		3		
SALEABLE	NOT APPLICABLE	34566-3813	0	C	BLUE	72		70		68		66			63	62			59		57				53
						52	51			48	47	46		44		42		40	39	38	37	36		34	33
						73				32		30				26	25	24		22	21	20			
											15	14	13			10	9	8		6	5	4		2	
SALEABLE	NOT APPLICABLE	34566-3823	0	A	BLACK			70	69						63		61			58	57	56	55	54	53
						52	51		49					44	43		41				37	36		34	
						73				32					27	26							19	18	
										16	15				11	10							3		
SALEABLE	NOT APPLICABLE	34566-3833	0	A	BLACK			70	69						63	62	61				57	56	55	54	53
						52	51		49					44	43	42	41				37	36		34	
						73				32			29	28	27	26			23				19	18	
										16	15		13	12	11	10		8					3		
SALEABLE	NOT APPLICABLE	34566-3843	0	A	BLACK	72	71	70	69	68	67	66		64	63	62		60	59				55	54	53
						52			49	48				44	43	42	41	40	39				35	34	33
						73				32			29	28	27		25	24	23				19	18	17
										16			13	12	11		9	8	7	6	5	4	3	2	1
SALEABLE	NOT APPLICABLE	34566-3853	0	A	BLACK	72	71	70	69	68	67	66	65	64	63	62		60	59				55	54	53
						52			49	48			45	44	43	42	41	40	39				35	34	33
						73				32			29	28	27		25	24	23				19	18	17
										16			13	12	11		9	8	7	6	5	4	3	2	1
SALEABLE	NOT APPLICABLE	34566-3863	0	B	ST GRY	72	71	70		68	67	66				62	61	60	59	58	57	56	55	54	53
						52	51	50		48	47	46				42	41	40	39	38	37	36	35	34	33
						73				32	31	30	29	28	27	26	25	24							17
										16	15	14	13			10		8						2	1
SALEABLE	NOT APPLICABLE	34566-3873	0	B	ST GRY										63				59	58	57	56	55		
								50	49	48		46	45		43				39	38	37	36	35	34	
						73							29		27				23	22	21			18	
										16	15	14	13						7	6	5	4	3		
SALEABLE	NOT APPLICABLE	34566-3883	0	B	ST GRY						67	66							59	58	57	56	55		53
								50	49	48			45						39	38	37	36	35	34	33
						73							29						23	22	21			18	
										16	15	14	13					8	7	6	5	4	3		

molex

MX123 52/66/73/80-WAY RECEPTACLE ASSY SEALED PIN OUT SHEET

STATUS	GM PART #	HRNS CONN ASSY			TPA	GROMMET CAP																			
		MATERIAL/PART NUMBER	WIRE DRESS OPTION	KEY OPTION Fp	COLOR OPTION Fp	NUMBERS INDICATE CAVITIES OPEN FOR CIRCUITS Fp																			
SALEABLE	NOT APPLICABLE	34566-3893	0	C	BLUE	72		70		68	67	66			63	62			59		57				53
						52	51			48	47	46		44		42								34	33
						73				32		30			27	26	25			22	21				
											15	14				10	9			6	5	4			
SALEABLE	NOT APPLICABLE	34566-3913	0	A	BLACK		71	70	69					64	63			60		58	57	56	55	54	53
						52	51		49				45	44	43	42	41				37	36		34	
						73				32		30		28		26			23		21		19	18	
										16	15			12		10		8			5		3		
SALEABLE	NOT APPLICABLE	34566-3923	0	B	ST GRY	72		70		68		66						60	59				55	54	53
						52		50		48		46						40	39				35	34	33
						73				32	31	30	29	28	27	26	25	24	23				19	18	
										16						10	9	8	7						
SALEABLE	NOT APPLICABLE	34566-3933	0	A	BLACK		71	70	69					64	63			60		58	57	56	55	54	53
						52	51		49				45	44	43	42	41				37	36		34	
						73				32		30		28		26							19	18	
										16	15			12		10							3		
SALEABLE	NOT APPLICABLE	34566-3943	0	C	BLUE	72		70		68		66						60	59				55	54	53
						52		50		48		46						40	39				35	34	33
						73				32	31	30	29	28	27	26	25	24							
										16						10	9	8							
SALEABLE	NOT APPLICABLE	34566-3953	0	C	BLUE	72		70		68					63	62			59		57				53
						52	51			48	47	46		44		42		40	39					34	33
						73				32		30				26	25		23	22	21	20			
											15	14	13						7	6	5	4			
SALEABLE	NOT APPLICABLE	34566-3963	0	C	BLUE	72		70		68	67	66			63	62			59		57				53
						52	51			48	47	46		44		42		40	39	38				34	33
						73				32		30				26	25			22	21				
											15	14				10	9			6	5	4			
SALEABLE	NOT APPLICABLE	34566-3973	0	C	BLUE	72		70		68	67				63	62			59		57				53
						52	51			48	47	46		44		42		40	39	38				34	33
						73				32		30				26	25			22	21				
											15	14								6	5	4			
SALEABLE	NOT APPLICABLE	34566-3983	0	A	BLACK	72	71	70	69					64	63			60	59	58	57	56	55	54	53
						52	51		49				45	44	43	42	41	40			37	36		34	
						73				32		30		28		26							19	18	
										16	15			12		10							3		
SALEABLE	NOT APPLICABLE	34566-3993	0	A	BLACK			70	69						63	62	61	60		58	57	56	55	54	53
						52	51		49					44	43	42	41	40			37	36		34	
						73				32			29	28	27	26							19	18	
										16	15		13	12	11	10							3		
SALEABLE	NOT APPLICABLE	34566-4013	0	B	ST GRY	72		70		68		66						60	59				55	54	53
						52		50		48		46						40	39				35	34	33
						73				32	31	30	29	28	27	26	25	24							17
										16						10		8						2	1
SALEABLE	NOT APPLICABLE	34566-4023	0	B	ST GRY	72	71	70		68	67	66				62	61	60	59	58	57	56	55	54	53
						52	51	50		48	47	46				42	41	40	39	38	37	36	35	34	33
						73				32	31	30	29	28	27	26	25	24							
										16	15	14	13			10	9	8							
SALEABLE	NOT APPLICABLE	34566-4033	0	C	BLUE	72		70		68					63	62			59	58	57				53
						52	51			48	47			44		42		40	39	38				34	33
						73				32		30				26	25			22	21	20			17
											15	14	13							6	5	4			1
SALEABLE	NOT APPLICABLE	34566-4043	0	A	BLACK		71	70	69		67			64	63			60			57	56	55	54	53
						52	51		49				45	44	43	42	41				37	36		34	
						73				32		30		28		26			23				19	18	
										16	15			12		10							3		
SALEABLE	NOT APPLICABLE	34566-4053	0	A	BLACK	72			69		67	66	65		63			60			57	56			53
									49		47	46		44	43	42		40			37	36	35		33
						73					31	30	29	28	27	26		24			21	20			17
										16	15	14	13		11	10					5	4	3	2	1

molex

MX123 52/66/73/80-WAY RECEPTACLE ASSY SEALED PIN OUT SHEET

STATUS	GM PART #	HRNS CONN ASSY			TPA	GROMMET CAP																			
		MATERIAL/PART NUMBER	WIRE DRESS OPTION	KEY OPTION Fp	COLOR OPTION Fp	NUMBERS INDICATE CAVITIES OPEN FOR CIRCUITS Fp																			
SALEABLE	NOT APPLICABLE	34566-4063	0	B	ST GRY					68	67			64					59	58				54	
												46	45						39	38					
						73				32		30	29	28	27				23	22					17
											15		13			10		8							1
SALEABLE	NOT APPLICABLE	34566-4073	0	A	BLACK	72		70				66			63	62			59		57	56	55		53
		52	51									46		44		42		40	39		37	36		34	33
						73				32		30				26	25			22	21		19	18	
											15	14				10	9			6			3		
SALEABLE	NOT APPLICABLE	34566-4083	0	C	BLUE	72		70		68					63	62			59	58	57				53
		52	51							48	47			44		42		40	39	38	37	36		34	33
						73				32		30			27	26	25	24		22	21	20			17
											15	14	13					8		6	5	4		2	1
SALEABLE	NOT APPLICABLE	34566-4093	0	A	BLACK		71	70	69		67			64	63			60			57	56	55	54	53
		52	51		49		47		45	44	43	42	41					37	36		34				
						73				32		30		28		26			23				19	18	
										16	15			12		10							3		
SALEABLE	NOT APPLICABLE	34566-4113	0	B	ST GRY					68	67			64						58					
												46	45							38					
						73				32		30	29	28	27					22					17
											15		13			10									1
SALEABLE	NOT APPLICABLE	34566-4123	9	A	BLACK	72			69		67	66	65		63			60			57	56			53
									49		47	46		44	43	42		40			37	36	35		33
						73					31	30	29	28		26		24			21	20			17
										16	15	14	13		11	10					5	4	3	2	1
SALEABLE	NOT APPLICABLE	34566-4133	9	B	ST GRY					68	67			64					59	58				54	
												46	45						39	38					
						73				32		30	29	28	27				23	22					17
											15		13			10	9	8							1
SALEABLE	NOT APPLICABLE	34566-4143	0	B	ST GRY					68	67			64					59	58				54	
												46	45						39	38					
						73				32		30	29	28	27				23	22					17
																10	9								1
SALEABLE	NOT APPLICABLE	34566-4153	0	B	ST GRY	72		70		68		66						60	59				55	54	53
		52		50						48		46		44				40	39				35	34	33
						73				32	31	30	29	28	27	26	25	24	23				19	18	
										16						10	9	8	7						
SALEABLE	NOT APPLICABLE	34566-4163	0	B	ST GRY	72		70		68		66						60	59				55	54	53
		52		50						48		46						40	39				35	34	33
						73				32	31	30	29	28	27	26	25	24							17
										16						10		8	7					2	1
SALEABLE	NOT APPLICABLE	34566-4173	0	A	BLACK	72	71	70	69					64	63			60	59	58		56	55	54	53
		52	51		49		47		45	44	43	42	41							38		36		34	
						73				32		30		28		26	25				21		19	18	
										16	15			12		10	9	8			5		3		
SALEABLE	NOT APPLICABLE	34566-4183	0	C	BLUE	72		70		68		66			63	62			59	58	57				53
		52	51							48	47	46		44		42		40	39					34	33
						73				32		30				26	25		23	22	21	20			17
											15	14	13			10	9		7	6	5	4			1
SALEABLE	NOT APPLICABLE	34566-4193	0	C	BLUE		71		69				65	64			61	60		58		56	55	54	
				50	49							45			43		41			38	37	36	35		
						73					31		29	28				24	23			20	19	18	17
										16			13	12	11			8	7				3	2	1
SALEABLE	NOT APPLICABLE	34566-4213	0	A	BLACK	72	71			68	67	66	65	64				60	59	58					
				50		48	47	46	45									40	39	38			35		
						73					31	30					25	24		22	21	20			17
												14					9		7	6	5	4		2	1
SALEABLE	NOT APPLICABLE	34566-4223	0	A	BLACK	72	71			68	67	66	65	64				60	59						
				50		48	47	46	45									40	39	38			35		33
						73					31	30					25	24	23	22	21	20			17
												14					9		7	6	5	4		2	1

molex

MX123 52/66/73/80-WAY RECEPTACLE ASSY SEALED PIN OUT SHEET

STATUS	GM PART #	HRNS CONN ASSY			TPA	GROMMET CAP																			
		MATERIAL/PART NUMBER	WIRE DRESS OPTION	KEY OPTION Fp	COLOR OPTION Fp	NUMBERS INDICATE CAVITIES OPEN FOR CIRCUITS Fp																			
SALEABLE	NOT APPLICABLE	34566-4233	0	B	ST GRY				69				65	64	63										
									49				45	44	43										
						73													23	22	21	20	19	18	
														12	11		9		7	6	5	4	3		
SALEABLE	NOT APPLICABLE	34566-4243	0	A	BLACK												61			58	57	56			
							51	50			47	46								38	37	36			
						73					31	30				26				22	21	20			
											15	14				10									
SALEABLE	NOT APPLICABLE	34566-4253	0	A	BLACK								65				61			58	57	56			
							51	50			47	46	45							38	37	36			
						73					31	30				26				22	21	20			
											15	14				10									
SALEABLE	NOT APPLICABLE	34566-4263	0	B	ST GRY	72	71	70	69	68			65	64		62	61	60						54	
						52	51				47	46		44		42	41	40							
						73				32	31	30		28		26	25	24				20	19		17
														12	11	10	9							2	1
SALEABLE	NOT APPLICABLE	34566-4273	0	B	ST GRY	72	71	70	69	68	67	66	65	64		62	61	60						54	
						52	51				47		45	44		42	41	40							
						73				32	31	30		28		26	25	24				20	19		17
													13	12	11	10	9	8						2	1
SALEABLE	NOT APPLICABLE	34566-4283	0	A	BLACK			70	69						63	62	61	60			57	56	55	54	53
						52	51		49					44	43	42	41				37	36		34	
						73				32			29	28	27	26			23				19	18	
										16	15		13	12	11	10		8					3		
SALEABLE	NOT APPLICABLE	34566-4293	0	B	ST GRY						67	66			63				59	58	57	56	55		53
								50	49	48			45		43				39	38	37	36	35	34	33
						73							29		27				23	22	21			18	
										16	15	14	13					8	7	6	5	4	3		
SALEABLE	NOT APPLICABLE	34566-4313	0	B	ST GRY										63				59	58	57	56	55		53
								50	49	48		46			43				39	38	37	36	35	34	33
						73							29		27				23	22	21			18	
										16	15	14	13						7	6	5	4	3		
SALEABLE	NOT APPLICABLE	34566-4323	0	B	ST GRY	72		70		68		66						60	59				55	54	53
						52		50		48		46						40	39				35	34	33
						73				32	31	30	29	28	27	26	25	24					19	18	17
										16						10		8	7					2	1
SALEABLE	NOT APPLICABLE	34566-4333	0	A	BLACK	72	71	70	69		67			64	63			60	59			56	55	54	53
						52	51		49		47		45	44	43	42	41			38		36		34	
						73				32		30		28		26	25		23				19	18	
										16	15			12		10	9						3		
SALEABLE	NOT APPLICABLE	34566-4343	0	A	BLACK	72	71	70	69					64	63			60	59	58		56	55	54	53
						52	51		49		47		45	44	43	42	41			38		36		34	
						73				32		30		28		26	25						19	18	
										16	15			12		10	9						3		
SALEABLE	NOT APPLICABLE	34566-4353	0	C	BLUE	72		70		68					63	62			59	58	57				53
						52	51			48	47			44		42		40	39					34	33
						73				32		30				26	25		23	22	21	20			17
											15	14	13						7	6	5	4			1
SALEABLE	NOT APPLICABLE	34566-4363	0	A	BLACK			70	69						63	62	61	60		58	57	56	55	54	53
						52	51		49					44	43	42	41				37	36		34	
						73				32			29	28	27	26			23				19	18	
										16	15		13	12	11	10		8					3		
SALEABLE	NOT APPLICABLE	34566-4373	0	A	BLACK			70	69						63					58		56		54	
						52	51		49		47			44	43	42	41	40				36		34	
						73				32				28		26							19	18	17
										16				12		10							3	2	1
SALEABLE	NOT APPLICABLE	34566-4383	0	H	ST GRY		79					74	73	72	71		69	68	67			64		62	61
							59					54		52			49	48	47					42	41
								38					33				29		27		25				
								18			15	14			11	10	9	8	7						

molex

MX123 52/66/73/80-WAY RECEPTACLE ASSY SEALED PIN OUT SHEET

STATUS	GM PART #	HRNS CONN ASSY			TPA	GROMMET CAP																			
		MATERIAL/PART NUMBER	WIRE DRESS OPTION	KEY OPTION Fp	COLOR OPTION Fp	NUMBERS INDICATE CAVITIES OPEN FOR CIRCUITS Fp																			
SALEABLE	NOT APPLICABLE	34566-4393	0	G	BLUE			78	77		75	74		72		70	69		67		65	64	63	62	
						60		58	57		55	54		52	51	50	49		47		45				
						40		38	37				33	32	31				27	26	25	24			
						20		18	17							10	9	8		6	5		3	2	1
SALEABLE	NOT APPLICABLE	34566-4413	0	B	ST GRY										63				59	58	57	56	55		53
								50	49	48		46			43				39	38	37	36	35	34	33
						73							29		27				23	22	21			18	
										16	15	14							7	6	5	4	3		
SALEABLE	NOT APPLICABLE	34566-4423	9	C	BLUE	72		70		68	67	66			63	62			59		57				53
						52	51			48	47	46		44		42		40	39	38	37	36		34	33
						73				32		30			27	26	25	24		22	21				
											15	14				10	9	8		6	5	4		2	
SALEABLE	NOT APPLICABLE	34566-4433	9	A	BLACK			70	69						63	62	61	60		58	57	56	55	54	53
						52	51	50	49					44	43	42	41	40			37	36		34	
						73				32			29	28	27	26							19	18	
										16	15	14	13	12	11	10							3		
SALEABLE	NOT APPLICABLE	34566-4443	9	A	BLACK						67	66													
										48	47						41								
						73				32	31	30	29		27	26	25			22	21		19	18	17
										16	15	14	13		11	10	9	8	7	6	5	4	3		1
SALEABLE	NOT APPLICABLE	34566-4453	0	A	BLACK	72	71	70	69	68			65	64	63	62	61	60	59	58	57	56	55	54	53
						52	51	50	49	48		46	45	44	43	42		40	39	38	37	36	35	34	33
						73								28				24	23			20			
														12	11									2	1
SALEABLE	NOT APPLICABLE	34566-4463	9	B	ST GRY										63										53
										48	47		45		43	42			39				35	34	33
						73										26			23	22			19		
															11										1
SALEABLE	NOT APPLICABLE	34566-4473	0	B	ST GRY									64	63	62			59	58					53
											47		45		43	42			39				35	34	33
						73										26	25		23	22					
																							3		1
SALEABLE	NOT APPLICABLE	34566-4483	9	C	BLUE	72		70		68	67	66			63	62			59	58	57	56	55		53
						52	51		49	48	47	46		44				40	39	38	37	36		34	33
						73				32		30			27	26	25	24	23	22	21	20	19	18	17
											15	14	13			10	9	8	7	6	5	4	3	2	1
SALEABLE	NOT APPLICABLE	34566-4493	9	A	BLACK	72	71	70	69		67			64	63	62	61	60	59	58	57	56	55	54	53
						52	51	50	49	48	47		45	44	43	42	41	40	39		37	36		34	
						73				32		30	29	28	27	26		24	23		21		19	18	17
										16	15	14	13	12	11	10		8			5		3	2	1
SALEABLE	NOT APPLICABLE	34566-4513	9	B	ST GRY	72	71	70		68	67	66				62	61	60	59	58	57	56	55	54	53
						52	51	50		48	47	46				42	41	40	39	38	37	36	35	34	33
						73				32	31	30	29	28	27	26	25	24	23				19	18	17
										16	15	14	13			10		8	7				3	2	1
SALEABLE	NOT APPLICABLE	34566-4523	0	G	BLUE			78	77		75	74		72		70	69		67		65	64	63	62	
						60		58	57		55	54		52	51	50	49		47		45				
						40		38	37						31				27	26	25	24			
						20		18	17							10	9	8		6	5		3	2	1
SALEABLE	NOT APPLICABLE	34566-4533	0	A	BLACK	72			69		67		65		63			60			57	56			53
									49		47			44	43			40			37	36	35		33
						73					31	30	29	28				24			21	20			17
										16	15	14	13		11	10					5	4	3	2	1
SALEABLE	NOT APPLICABLE	34566-4543	0	B	ST GRY					68	67			64	63					58	57		55		53
												46	45		43					38	37		35		
						73				32		30	29	28	27					22	21		19		17
														12		10									1
SALEABLE	NOT APPLICABLE	34566-4553	0	B	ST GRY					68	67			64	63					58	57				53
												46	45		43					38	37				
						73				32		30	29	28	27					22	21				17
														12		10									

MX123 52/66/73/80-WAY RECEPTACLE ASSY SEALED PIN OUT SHEET

STATUS	GM PART #	HRNS CONN ASSY			TPA	GROMMET CAP																				
		MATERIAL/PART NUMBER	WIRE DRESS OPTION	KEY OPTION Fp	COLOR OPTION Fp	NUMBERS INDICATE CAVITIES OPEN FOR CIRCUITS Fp																				
SALEABLE	NOT APPLICABLE	34566-4563	0	B	ST GRY					68	67			64	63					58			55		53
												46	45		43					38			35		
						73				32		30	29	28	27					22			19		17
														12		10									1
SALEABLE	NOT APPLICABLE	34566-4573	0	B	ST GRY					68	67			64	63					58					53
												46	45		43					38					
						73				32		30	29	28	27					22					17
														12		10									
SALEABLE	NOT APPLICABLE	34566-4583	0	B	ST GRY					68	67			64						58					53
												46	45							38					
						73				32		30	29	28	27					22					17
														12		10									1
SALEABLE	NOT APPLICABLE	34566-4593	0	B	ST GRY					68	67			64						58					53
												46	45							38					
						73				32		30	29	28	27					22					17
														12		10									
SALEABLE	NOT APPLICABLE	34566-4613	0	A	BLACK	72			69		67	66	65		63			60			57	56			53
									49		47			44	43	42		40			37	36	35		33
						73					31	30	29	28	27	26		24			21	20			17
										16	15	14	13		11	10					5	4	3	2	1
SALEABLE	NOT APPLICABLE	34566-4623	0	B	ST GRY	72		70		68		66						60	59				55	54	53
						52		50		48		46						40	39				35	34	33
						73				32	31	30	29	28	27	26	25	24	23						17
										16						10		8	7					2	1
SALEABLE	NOT APPLICABLE	34566-4633	0	A	BLACK		71	70	69					64	63			60	59	58		56	55	54	53
						52	51		49		47		45	44	43	42	41			38		36		34	
						73				32		30		28		26					21		19	18	
										16	15			12		10		8			5		3		
SALEABLE	NOT APPLICABLE	34566-4643	0	B	ST GRY	72		70		68		66						60	59				55	54	53
						52		50		48		46						40	39				35	34	33
						73				32	31	30	29	28	27	26	25	24	23				19	18	17
										16						10		8	7					2	1
SALEABLE	NOT APPLICABLE	34566-4653	0	A	BLACK		71	70	69		67			64	63			60	59			56	55	54	53
						52	51		49		47		45	44	43	42	41			38		36		34	
						73				32		30		28		26			23				19	18	
										16	15			12		10							3		
SALEABLE	NOT APPLICABLE	34566-4663	0	A	BLACK		71	70	69					64	63			60	59	58		56	55	54	53
						52	51		49		47		45	44	43	42	41			38		36		34	
						73				32		30		28		26							19	18	
										16	15			12		10							3		
SALEABLE	NOT APPLICABLE	34566-4673	0	A	BLACK						67	66													
											47						41								
						73				32	31	30	29		27	26	25			22	21		19	18	17
										16	15	14	13			10	9	8	7	6	5	4	3		
SALEABLE	NOT APPLICABLE	34566-4683	9	B	ST GRY	72	71	70	69	68	67	66	65	64		62	61	60	59	58	57	56	55	54	
						52	51	50	49			46		44			41	40		38	37	36			
						73				32	31	30	29	28	27		25	24			21	20		18	17
										16	15	14	13	12		10	9	8	7	6	5	4	3	2	
SALEABLE	NOT APPLICABLE	34566-4693	0	B	ST GRY	72	71	70	69	68	67	66	65				61	60			57	56	55	54	
						52	51	50	49	48		46		44			41	40		38	37	36			
						73				32	31	30	29	28	27			24			21	20	19	18	17
										16	15	14	13	12	11	10	9	8	7	6	5	4		2	
SALEABLE	NOT APPLICABLE	34566-4713	0	A	BLACK	72	71	70	69		67			64	63			60	59			56	55	54	53
						52	51		49		47		45	44	43	42	41					36		34	
						73				32		30		28		26			23				19	18	
										16	15			12		10							3		
SALEABLE	NOT APPLICABLE	34566-4723	0	A	BLACK	72	71	70	69					64	63			60	59	58		56	55	54	53
						52	51		49		47		45	44	43	42	41					36		34	
						73				32		30		28		26							19	18	
										16	15			12		10							3		

molex

MX123 52/66/73/80-WAY RECEPTACLE ASSY SEALED PIN OUT SHEET

STATUS	GM PART #	HRNS CONN ASSY			TPA	GROMMET CAP																				
		MATERIAL/PART NUMBER	WIRE DRESS OPTION	KEY OPTION Fp	COLOR OPTION Fp	NUMBERS INDICATE CAVITIES OPEN FOR CIRCUITS Fp																				
SALEABLE	NOT APPLICABLE	34566-4733	0	A	BLACK	72	71	70	69					64	63			60	59	58		56	55	54	53	
						52	51		49		47		45	44	43	42	41					36		34		
						73				32		30		28		26					21		19	18		
										16	15			12		10		8			5		3			
SALEABLE	NOT APPLICABLE	34566-4743	9	A	BLACK	72	71	70	69		67		65	64	63	62	61	60	59	58	57	56	55	54	53	
						52	51	50	49	48	47		45	44	43	42	41	40	39		37	36		34		
						73				32		30	29	28	27	26		24	23		21		19	18	17	
										16	15	14	13	12	11	10		8			5		3	2	1	
SALEABLE	NOT APPLICABLE	34566-4753	0	B	ST GRY					68	67			64						58						
												46	45							38						
						73				32		30	29	28	27					22					17	
											15		13			10				6					1	
SALEABLE	NOT APPLICABLE	34566-4763	0	B	ST GRY					68	67			64												
												46	45													
						73				32		30	29	28	27										17	
											15		13			10				6						
SALEABLE	NOT APPLICABLE	34566-4773	0	B	ST GRY					68	67			64					59	58				54		
												46	45						39	38						
						73				32		30	29	28	27				23	22					17	
											15		13			10		8		6					1	
SALEABLE	NOT APPLICABLE	34566-4783	0	B	ST GRY					68	67			64	63					58			55			
												46	45		43					38			35			
						73				32		30	29	28	27					22			19		17	
											15		13			10				6					1	
SALEABLE	NOT APPLICABLE	34566-4793	0	B	ST GRY					68	67			64	63					58						
												46	45		43					38						
						73				32		30	29	28	27					22					17	
											15		13			10				6						
SALEABLE	NOT APPLICABLE	34566-4813	9	B	ST GRY					68	67			64					59	58				54		
												46	45						39	38						
						73				32		30	29	28	27				23	22					17	
											15		13			10	9	8		6					1	
SALEABLE	NOT APPLICABLE	34566-4823	0	C	BLUE					68	67	66	65	64					59	58	57		55	54	53	
							51	50	49	48		46	45		43	42	41	40	39	38	37		35		33	
						73				32	31	30				26		24	23	22		20				
										16			13			10	9	8	7	6	5	4	3	2		
SALEABLE	NOT APPLICABLE	34566-4833	0	C	BLUE	72		70		68	67	66			63	62			59		57				53	
						52	51			48	47	46		44		42		40	39		37	36		34	33	
						73				32		30			27	26	25	24		22	21					
											15	14				10	9	8		6	5	4		2		
SALEABLE	NOT APPLICABLE	34566-4843	0	C	BLUE	72		70		68	67	66			63	62			59		57				53	
						52	51			48	47	46		44		42		40	39	38	37	36		34	33	
						73				32		30			27	26	25	24		22	21					
											15	14				10	9	8		6	5	4		2		
SALEABLE	NOT APPLICABLE	34566-4853	0	C	BLUE	72		70		68		66			63	62			59		57	56	55		53	
						52	51			48	47	46		44		42		40	39		37	36		34	33	
						73				32		30			27	26	25	24		22	21		19	18		
											15	14				10	9	8		6	5	4	3	2		
SALEABLE	NOT APPLICABLE	34566-4863	0	C	BLUE	72		70		68		66			63	62			59		57				53	
						52	51			48	47	46		44		42		40	39	38	37	36		34	33	
						73				32		30			27	26	25	24		22	21					
											15	14				10	9	8		6	5	4		2		
SALEABLE	NOT APPLICABLE	34566-4873	0	C	BLUE	72		70		68		66			63	62			59		57				53	
						52	51			48	47	46		44		42		40	39		37	36		34	33	
						73				32		30			27	26	25	24		22	21					
											15	14				10	9	8		6	5	4		2		
SALEABLE	NOT APPLICABLE	34566-4883	9	A	BLACK	72			69		67		65		63			60			57	56			53	
									49		47	46		44	43			40			37	36	35		33	
						73					31	30	29	28				24			21	20			17	
										16	15	14	13		11	10					5	4	3	2	1	

molex

MX123 52/66/73/80-WAY RECEPTACLE ASSY SEALED PIN OUT SHEET

STATUS	GM PART #	HRNS CONN ASSY			TPA	GROMMET CAP																				
		MATERIAL/PART NUMBER	WIRE DRESS OPTION	KEY OPTION Fp	COLOR OPTION Fp	NUMBERS INDICATE CAVITIES OPEN FOR CIRCUITS Fp																				
SALEABLE	NOT APPLICABLE	34566-4893	9	B	ST GRY					68	67			64	63					58			55		
												46	45		43					38			35		
						73				32		30	29	28	27					22			19		17
											15		13			10									1
SALEABLE	NOT APPLICABLE	34566-4913	9	B	ST GRY					68	67			64	63					58	57		55		53
												46	45		43					38	37		35		
						73				32		30	29	28	27					22	21		19		17
														12		10									1
SALEABLE	NOT APPLICABLE	34566-4923	9	A	BLACK	72			69		67		65		63			60			57	56			53
									49		47			44	43			40			37	36	35		33
						73					31	30	29	28				24			21	20			17
										16	15	14	13		11	10					5	4	3	2	1
SALEABLE	NOT APPLICABLE	34566-4933	0	C	BLUE	72		70		68	67	66			63	62			59		57				53
						52	51			48	47	46		44				40	39		37	36	35	34	33
						73				32		30			27	26	25	24		22	21				
											15	14				10	9	8		6	5	4		2	
SALEABLE	NOT APPLICABLE	34566-4943	0	A	BLACK			70	69	68	67				63	62	61	60	59	58	57	56	55	54	53
						52	51	50	49					44	43	42	41		39	38	37	36		34	
						73				32	31		29	28	27	26	25		23				19	18	
										16	15	14	13	12	11	10	9	8					3		
SALEABLE	NOT APPLICABLE	34566-4953	0	B	ST GRY	72	71	70	69	68	67	66	65	64	63				59						53
						52	51	50	49	48	47	46	45	44	43				39					34	33
						73				32	31	30	29	28	27	26	25	24	23				19	18	17
										16	15	14	13	12	11	10		8	7				3	2	1
SALEABLE	NOT APPLICABLE	34566-4963	9	A	BLACK	72			69		67	66	65		63			60			57	56			53
									49		47	46		44	43	42		40			37	36	35		33
						73					31	30	29	28	27	26		24			21	20			17
										16	15	14	13		11	10					5	4	3	2	1
SALEABLE	NOT APPLICABLE	34566-4973	9	B	ST GRY					68	67			64					59	58				54	
												46	45	44	43				39	38					
						73				32		30	29	28	27				23	22					17
							15		13					12		10				6					1
SALEABLE	NOT APPLICABLE	34566-4983	0	B	ST GRY	72		70		68		66						60	59				55	54	53
						52		50		48		46		44				40	39				35	34	33
						73				32	31	30	29	28	27	26	25	24	23				19	18	17
										16						10		8	7					2	1
SALEABLE	NOT APPLICABLE	34566-4993	0	A	BLACK	72	71	70	69		67			64	63			60	59			56	55	54	53
						52	51		49		47		45	44	43	42	41					36		34	
						73				32		30		28		26							19	18	
										16	15			12		10							3		
SALEABLE	NOT APPLICABLE	34566-5013	9	B	ST GRY					68	67			64	63				59	58			55	54	
												46	45	44	43				39	38			35		
						73				32		30	29	28	27				23	22			19		17
							15		13	12						10				6					1
SALEABLE	NOT APPLICABLE	34566-5023	0	C	BLUE	72		70		68	67				63	62			59		57				53
						52	51			48	47	46		44		42		40	39		37	36		34	33
						73				32		30				26	25	24		22	21	20			
							15	14										8		6	5	4		2	
SALEABLE	NOT APPLICABLE	34566-5033	0	A	BLACK			70	69						63	62	61	60		58	57	56	55	54	53
						52	51		49					44	43	42	41				37	36	35	34	33
						73				32			29	28	27	26	25						19	18	
										16	15		13	12	11	10							3		
SALEABLE	NOT APPLICABLE	34566-5043	0	A	BLACK																				
						73					31														
SALEABLE	NOT APPLICABLE	34566-5053	0	B	ST GRY																				
											47														
						73					31											20			17
																									1

molex

MX123 52/66/73/80-WAY RECEPTACLE ASSY SEALED PIN OUT SHEET

STATUS	GM PART #	HRNS CONN ASSY			TPA	GROMMET CAP																			
		MATERIAL/PART NUMBER	WIRE DRESS OPTION	KEY OPTION Fp	COLOR OPTION Fp	NUMBERS INDICATE CAVITIES OPEN FOR CIRCUITS Fp																			
SALEABLE	NOT APPLICABLE	34566-5063	9	H	ST GRY	80	79	78	77	76	75	74	73	72	71	70	69	68	67	66	65	64	63	62	61
						60	59	58	57	56	55	54	53	52	51	50	49	48	47	46	45	44	43	42	41
						40	39	38	37		35	34	33	32		30	29		27	26		24	23	22	21
						20	19	18	17			14	13	12	11	10	9	8		6	5		3	2	
SALEABLE	NOT APPLICABLE	34566-5073	9	A	BLACK	72	71	70	69	68	67	66	65	64	63	62	61	60	59	58	57	56	55	54	53
						52	51	50	49	48	47	46	45	44	43	42	41	40	39	38	37	36		34	33
						73				32	31	30	29	28	27	26		24	23	22	21	20	19	18	
										16			13	12	11	10	9	8							1
SALEABLE	NOT APPLICABLE	34566-5083	9	A	BLACK			70	69						63	62	61	60		58	57	56	55	54	53
						52	51		49					44	43	42	41			38	37			34	
						73				32			29	28	27	26			23				19	18	
										16	15		13	12	11	10		8					3		
SALEABLE	NOT APPLICABLE	34566-5093	0	B	ST GRY	72	71	70	69	68	67	66	65	64	63	62	61	60	59	58	57	56	55	54	53
						52	51	50	49	48	47	46	45	44	43	42	41	40	39	38	37	36	35	34	33
						73							29		27				23	22	21			18	
										16	15	14	13					8	7	6	5	4	3		
SALEABLE	NOT APPLICABLE	34566-5113	0	A	BLACK	72	71	70	69	68	67	66		64	63	62		60	59				55	54	53
						52			49	48				44	43	42	41	40	39				35	34	33
						73				32			29		27		25	24	23				19	18	17
										16			13	12	11		9	8	7	6	5	4	3	2	1
SALEABLE	NOT APPLICABLE	34566-5123	9	C	BLUE	72		70		68	67	66			63	62			59		57				53
						52	51			48	47	46	45	44				40	39	38	37	36		34	33
						73				32		30			27	26	25	24		22	21	20			
											15	14				10	9	8		6	5	4		2	
SALEABLE	NOT APPLICABLE	34566-5133	9	B	ST GRY	72	71	70		68	67	66				62	61	60	59	58	57	56	55	54	53
						52	51	50		48	47	46				42	41	40	39	38	37	36	35	34	33
						73				32	31	30	29	28	27	26	25	24	23						
										16	15	14	13			10	9	8							
SALEABLE	NOT APPLICABLE	34566-5143	0	C	BLUE	72		70		68	67	66			63	62			59		57				53
						52	51			48	47	46		44		42		40	39		37	36		34	33
						73				32		30				26	25	24		22	21	20			
											15	14				10	9	8		6	5	4		2	
SALEABLE	NOT APPLICABLE	34566-5153	0	A	BLACK			70	69						63	62	61	60		58	57	56	55	54	53
						52	51		49		47			44	43	42	41				37	36	35	34	33
						73				32			29	28	27	26	25						19	18	
										16	15		13	12	11	10							3		
SALEABLE	NOT APPLICABLE	34566-5163	9	A	BLACK	72			69		67		65		63			60			57	56			53
									49		47			44	43			40			37	36	35		33
						73					31	30	29	28				24			21	20			17
										16	15	14			11	10					5	4	3	2	1
SALEABLE	NOT APPLICABLE	34566-5173	9	B	ST GRY					68	67			64	63				59		57				
												46	45		43				39		37				
						73				32		30	29	28	27						21				
																10				6	5	4	3		
SALEABLE	NOT APPLICABLE	34566-5183	0	B	ST GRY					68	67			64					59	58				54	
												46	45	44					39	38					
						73				32		30	29	28	27				23	22					17
														12		10		8							1
SALEABLE	NOT APPLICABLE	34566-5193	0	A	BLACK			70	69						63	62	61	60		58	57	56	55	54	53
						52	51		49					44	43	42	41				37	36		34	
						73				32			29	28	27	26							19	18	17
										16	15		13	12	11	10							3	2	1
SALEABLE	NOT APPLICABLE	34566-5213	0	A	BLACK	72	71	70	69	68	67	66	65	64	63	62		60	59				55	54	53
						52			49	48				44	43	42	41	40	39				35	34	33
						73				32			29		27		25	24	23				19	18	17
										16			13	12	11		9	8	7	6	5	4	3	2	1
SALEABLE	NOT APPLICABLE	34566-5223	0	C	BLUE	72		70			67	66			63	62			59		57				53
						52	51			48		46		44		42		40	39					34	33
						73				32		30			27	26	25			22	21				
											15	14				10	9			6	5	4			

molex

MX123 52/66/73/80-WAY RECEPTACLE ASSY SEALED PIN OUT SHEET

STATUS	GM PART #	HRNS CONN ASSY			TPA	GROMMET CAP																			
		MATERIAL/PART NUMBER	WIRE DRESS OPTION	KEY OPTION Fp	COLOR OPTION Fp	NUMBERS INDICATE CAVITIES OPEN FOR CIRCUITS Fp																			
SALEABLE	NOT APPLICABLE	34566-5233	0	C	BLUE	72		70		68	67	66			63	62			59		57	56	55		53
						52	51			48	47	46		44		42		40	39	38				34	33
						73				32		30				26	25			22	21		19	18	
											15	14				10	9			6	5	4	3		
SALEABLE	NOT APPLICABLE	34566-5243	0	C	BLUE	72	71	70	69	68	67	66	65		63	62	61		59	58	57	56	55	54	53
							51	50	49	48		46	45	44	43	42	41	40	39	38		36	35	34	33
						73					31	30	29	28	27	26	25			22	21	20	19	18	17
										16	15	14					9		7	6	5	4	3	2	1
SALEABLE	NOT APPLICABLE	34566-5253	0	B	ST GRY						67	66			63				59	58	57	56	55		53
								50	49	48		46	45		43				39	38	37	36	35	34	33
						73							29		27				23	22	21			18	
										16	15	14	13					8	7	6	5	4	3		
SALEABLE	NOT APPLICABLE	34566-5263	0	B	ST GRY	72	71	70		68	67	66				62	61	60	59	58	57	56	55	54	53
						52	51	50		48	47	46				42	41	40	39	38	37	36	35	34	33
						73				32	31	30	29	28	27		25	24							17
										16	15	14	13			10		8						2	1
SALEABLE	NOT APPLICABLE	34566-5273	0	A	BLACK			70	69						63	62	61	60		58	57	56	55	54	53
						52	51		49					44	43	42	41				37	36		34	
						73				32			29	28	27	26			23				19	18	
										16	15		13	12	11	10	9	8					3		
SALEABLE	NOT APPLICABLE	34566-5283	0	C	BLUE	72		70		68	67	66			63	62			59		57	56	55	54	53
						52	51			48	47	46		44		42		40	39					34	33
						73				32		30				26	25			22	21		19	18	
											15	14				10	9			6	5	4	3		
SALEABLE	NOT APPLICABLE	34566-5293	0	A	BLACK			70	69						63	62	61	60		58	57	56	55	54	53
						52	51		49					44	43	42	41	40			37	36		34	
						73				32			29	28	27	26							19	18	17
										16	15		13	12	11	10							3	2	1
SALEABLE	NOT APPLICABLE	34566-5313	0	C	BLUE	72		70		68	67	66			63	62			59		57	56	55		53
						52	51			48	47	46		44		42		40	39	38	37	36		34	33
						73				32		30			27	26	25	24		22	21		19	18	
							15	14								10	9	8		6	5	4	3	2	
SALEABLE	NOT APPLICABLE	34566-5323	0	G	BLUE	80		78	77		75	74	73	72		70	69		67		65	64	63	62	
						60		58	57		55	54		52	51	50	49		47		45				
						40		38	37				33	32	31				27	26	25	24			
						20		18	17							10	9	8		6	5	4	3	2	1
SALEABLE	NOT APPLICABLE	34566-5333	0	A	BLACK	72	71	70		68	67	66	65	64	63	62		60	59			56			53
							51		49	48	47	46	45	44	43		41	40							
						73						30	29	28		26	25	24				20			17
														12	11										
SALEABLE	NOT APPLICABLE	34566-5343	0	B	ST GRY					68	67			64					59	58				54	
												46	45						39	38					
						73				32		30	29	28	27				23	22					17
														12		10		8		6					1
SALEABLE	NOT APPLICABLE	34566-5353	9	B	ST GRY					68	67			64	63				59	58			55	54	
												46	45	44	43				39	38			35	34	
						73				32		30	29	28	27				23	22			19		17
							15		13	12		10								6					1
SALEABLE	NOT APPLICABLE	34566-5363	0	C	BLUE	72		70		68		66			63	62			59		57				53
						52	51			48	47	46		44		42		40	39	38				34	33
						73				32		30				26	25			22	21				
							15	14								10	9			6	5	4			
SALEABLE	NOT APPLICABLE	34566-5373	0	C	BLUE	72		70		68		66			63	62			59		57				53
						52	51			48	47	46		44		42		40	39					34	33
						73				32		30				26	25			22	21				
							15	14								10	9			6					
SALEABLE	NOT APPLICABLE	34566-5383	0	C	BLUE	72		70		68		66			63	62			59		57				53
						52	51			48	47	46		44		42		40	39		37	36		34	33
						73				32		30				26	25	24		22	21				
							15	14								10	9	8		6	5	4		2	

MX123 52/66/73/80-WAY RECEPTACLE ASSY SEALED PIN OUT SHEET

STATUS	GM PART #	HRNS CONN ASSY			TPA	GROMMET CAP																			
		MATERIAL/PART NUMBER	WIRE DRESS OPTION	KEY OPTION Fp	COLOR OPTION Fp	NUMBERS INDICATE CAVITIES OPEN FOR CIRCUITS Fp																			
SALEABLE	NOT APPLICABLE	34566-5393	0	A	BLACK			70	69						63							56	55	54	53
						52	51		49					44	43	42	41					36		34	
						73				32				28		26			23		21		19	18	
										16				12		10		8			5		3		
SALEABLE	NOT APPLICABLE	34566-5413	0	A	BLACK			70	69						63							56	55	54	53
						52	51		49					44	43	42	41					36		34	
						73				32				28		26			23		21		19	18	
										16	15			12		10		8			5		3		
SALEABLE	NOT APPLICABLE	34566-5423	0	A	BLACK			70	69						63					58		56	55	54	53
						52	51		49					44	43	42	41					36		34	
						73				32				28		26							19	18	
										16				12		10							3		
SALEABLE	NOT APPLICABLE	34566-5433	9	B	ST GRY					68	67			64					59	58				54	
												46	45						39	38					
						73				32		30	29	28	27				23	22					17
																10				6					1
SALEABLE	NOT APPLICABLE	34566-5443	9	B	ST GRY					68	67			64					59	58				54	
												46	45						39	38					
						73				32		30	29	28	27				23	22					17
											15		13			10				6					1
SALEABLE	NOT APPLICABLE	34566-5453	0	B	ST GRY					68	67			64					59	58				54	
												46	45						39	38					
						73				32		30	29	28	27				23	22					17
											15		13			10				6					1
SALEABLE	NOT APPLICABLE	34566-5463	0	A	BLACK	72		70							63										
						52			49								41								
						73					31	30		28	27	26			23			20	19		
										16	15	14		12		10				6					
SALEABLE	NOT APPLICABLE	34566-5473	0	A	BLACK	72	71	70		68	67	66	65	64	63	62		60	59			56			53
						52	51			48	47	46	45	44	43	42	41	40							
						73					31	30	29	28	27	26	25	24	23			20	19		17
										16	15	14		12	11	10				6					
SALEABLE	NOT APPLICABLE	34566-5483	0	B	ST GRY	72		70		68		66		64	63			60	59				55	54	53
						52		50		48		46						40	39				35	34	33
						73				32	31	30	29	28	27	26	25	24				20			17
										16						10		8			5	4		2	1
SALEABLE	NOT APPLICABLE	34566-5493	0	A	BLACK	72		70	69						63			60	59	58	57	56	55	54	53
						52	51		49					44	43	42	41	40			37	36		34	
						73				32				28		26							19	18	17
										16	15			12		10							3	2	1
SALEABLE	NOT APPLICABLE	34566-5513	9	B	ST GRY					68	67			64	63					58			55		
												46	45		43					38			35		
						73				32		30	29	28	27					22			19		17
																10									1
SALEABLE	NOT APPLICABLE	34566-5523	9	A	BLACK	72			69		67	66	65		63			60			57	56			53
									49		47			44	43	42		40			37	36	35		33
						73					31	30	29	28	27	26		24			21	20			17
										16	15	14	13		11	10					5	4	3	2	1
SALEABLE	NOT APPLICABLE	34566-5533	9	B	ST GRY					68	67			64					59	58				54	
												46	45						39	38					
						73				32		30	29	28	27				23	22					17
																10	9	8		6					1
SALEABLE	NOT APPLICABLE	34566-5543	9	A	BLACK					68	67			64					59	58				54	
												46	45						39	38					
						73				32		30	29	28	27				23	22					17
														12		10		8		6					1
SALEABLE	NOT APPLICABLE	34566-5553	9	B	ST GRY					68	67			64					59	58				54	
												46	45						39	38					
						73				32		30	29	28	27				23	22					17
														12		10		8		6					1

molex

MX123 52/66/73/80-WAY RECEPTACLE ASSY SEALED PIN OUT SHEET

STATUS	GM PART #	HRNS CONN ASSY			TPA	GROMMET CAP																				
		MATERIAL/PART NUMBER	WIRE DRESS OPTION	KEY OPTION Fp	COLOR OPTION Fp	NUMBERS INDICATE CAVITIES OPEN FOR CIRCUITS Fp																				
SALEABLE	NOT APPLICABLE	34566-5563	0	A	BLACK	72	71	70	69					64	63			60	59	58	57	56	55	54	53
						52	51		49	48	47		45	44	43	42	41				37	36		34	33
						73				32		30		28		26							19	18	17
										16	15			12		10							3	2	1
SALEABLE	NOT APPLICABLE	34566-5573	0	C	BLUE	72		70		68		66			63	62			59	58	57	56	55		53
						52	51		49	48	47	46		44		42		40	39	38	37	36		34	33
						73				32		30				26	25	24	23	22	21	20	19	18	17
							15	14	13			10	9	8	7	6	5	4		2	1				
SALEABLE	NOT APPLICABLE	34566-5583	0	B	ST GRY	72		70		68		66		64	63			60	59				55	54	53
						52		50		48		46						40	39				35	34	33
						73				32	31	30	29	28	27	26	25	24	23			20			17
										16						10		8	7		5	4		2	1
SALEABLE	NOT APPLICABLE	34566-5593	0	C	BLUE	72		70		68		66			63	62			59		57		55		53
						52	51			48	47	46		44		42		40	39					34	33
						73				32		30				26	25		23	22	21				
							15	14				10	9		7	6	5	4			
SALEABLE	NOT APPLICABLE	34566-5613	0	C	BLUE	72		70		68					63	62			59	58	57				53
						52	51			48	47			44		42		40	39		37	36		34	33
						73				32		30			27	26	25	24	23	22	21	20			17
							15	14	13					8	7	6	5	4		2	1
SALEABLE	NOT APPLICABLE	34566-5623	0	C	BLUE	72		70		68					63	62			59		57				53
						52	51			48	47			44		42		40	39		37	36		34	33
						73				32		30			27	26	25	24	23	22	21	20			
							15	14	13					8	7	6	5	4		2	
SALEABLE	NOT APPLICABLE	34566-5633	0	B	ST GRY	72										62	61								
						52				48		46		44	43		41	40							
						73						30										20	19	18	
										16	15	14										4			
SALEABLE	NOT APPLICABLE	34566-5643	0	B	ST GRY	72										62	61								
						52				48		46			43		41	40							
						73						30										20	19	18	
										16	15	14										4			
SALEABLE	NOT APPLICABLE	34566-5653	0	A	BLACK	72	71	70	69	68		66	65	64	63		61	60			57	56		54	53
						52	51	50	49	48		46	45	44	43			40	39	38	37	36		34	33
						73				32	31	30	29	28		26	25		23	22	21				17
							15	14	13	12			9		7	6	5			2	
SALEABLE	NOT APPLICABLE	34566-5663	0	C	BLUE				69		67	66		64		62		60			57		55	54	
						52	51	50		48		46	45	44		42					37		35	34	33
						73				32	31			28	27	26							19	18	
										16	15	14	13	12	11	10	9								
SALEABLE	NOT APPLICABLE	34566-5673	0	C	BLUE				69		67	66		64			61	60			57			54	
						52	51	50	49	48		46	45	44			41				37			34	33
						73				32	31			28	27		25							18	
										16	15	14	13	12	11	10	9								
SALEABLE	NOT APPLICABLE	34566-5683	0	B	ST GRY	72										62	61								
						52				48		46		44	43		41	40							
						73						30										20	19	18	
										16		14										4			
SALEABLE	NOT APPLICABLE	34566-5693	0	A	BLACK	72	71	70	69	68		66	65	64	63		61	60			57	56		54	53
						52	51	50	49	48		46	45	44	43			40	39	38	37	36		34	33
						73				32	31	30	29	28		26	25		23	22	21	20			
							15	14	13	12			9		7	6	5	4		2	
SALEABLE	NOT APPLICABLE	34566-5713	0	C	BLUE				69		67	66		64		62		60			57		55	54	
						52	51	50		48		46	45	44		42					37		35	34	33
						73				32	31			28	27	26							19	18	17
										16	15	14	13	12	11	10	9	8	7						
SALEABLE	NOT APPLICABLE	34566-5723	0	C	BLUE				69		67	66		64			61	60			57			54	
						52	51	50	49	48		46	45	44			41				37			34	33
						73					31			28	27		25							18	
										16	15	14	13	12	11	10	9	8	7						

MX123 52/66/73/80-WAY RECEPTACLE ASSY SEALED PIN OUT SHEET

STATUS	GM PART #	HRNS CONN ASSY			TPA	GROMMET CAP																			
		MATERIAL/PART NUMBER	WIRE DRESS OPTION	KEY OPTION Fp	COLOR OPTION Fp	NUMBERS INDICATE CAVITIES OPEN FOR CIRCUITS Fp																			
SALEABLE	NOT APPLICABLE	34566-5733	0	A	BLACK		71	70	69					64	63			60	59	58	57	56	55	54	53
						52	51		49				45	44	43	42	41				37	36		34	
						73				32		30		28		26							19	18	
										16	15			12		10							3		
SALEABLE	NOT APPLICABLE	34566-5743	0	A	BLACK		71	70	69		67			64	63			60	59		57	56	55	54	53
						52	51		49				45	44	43	42	41				37	36		34	
						73				32		30		28		26							19	18	
										16	15			12		10							3		
SALEABLE	NOT APPLICABLE	34566-5753	0	A	BLACK		71	70	69					64	63			60	59		57	56	55	54	53
						52	51		49				45	44	43	42	41				37	36		34	
						73				32		30		28		26			23		21		19	18	
										16	15			12		10		8			5		3		
SALEABLE	NOT APPLICABLE	34566-5763	0	C	BLUE	72		70		68		66			63	62			59		57				53
						52	51			48	47	46		44		42		40	39		37	36		34	33
						73				32		30			27	26	25	24		22	21	20			
											15	14	13			10	9	8		6	5	4		2	
SALEABLE	NOT APPLICABLE	34566-5773	0	C	BLUE	72		70		68					63	62			59	58	57				53
						52	51			48	47			44		42		40	39		37	36		34	33
						73				32		30			27	26	25	24		22	21	20			17
											15	14	13					8		6	5	4		2	1
SALEABLE	NOT APPLICABLE	34566-5783	0	C	BLUE	72		70		68					63	62			59		57				53
						52	51			48	47			44		42		40	39		37	36		34	33
						73				32		30			27	26	25	24		22	21	20			
											15	14	13					8		6	5	4		2	
SALEABLE	NOT APPLICABLE	34566-5793 SAME AS P/N 34566-4013	0	B	ST GRY	72		70		68		66						60	59				55	54	53
						52		50		48		46						40	39				35	34	33
						73				32	31	30	29	28	27	26	25	24							17
										16						10		8						2	1
SALEABLE	NOT APPLICABLE	34566-5813	0	B	ST GRY	72		70		68		66						60	59				55	54	53
						52		50		48		46						40	39				35	34	33
						73				32	31	30	29	28	27	26	25	24	23				19	18	17
										16						10		8	7					2	1
SALEABLE	NOT APPLICABLE	34566-5823	0	A	BLACK	72		70							63										
						52			49						43		41								
						73					31	30		28	27	26			23			20	19		
										16	15	14				10				6					
SALEABLE	NOT APPLICABLE	34566-5833	0	A	BLACK	72		70							63										
						52			49						43		41								
						73					31	30		28	27	26			23			20	19		
										16	15	14		12		10				6					
SALEABLE	NOT APPLICABLE	34566-5843	0	H	ST GRY		79					74	73	72	71			68	67		65	64	63	62	61
							59		57			54		52										42	41
								38				34	33				29		27		25				
								18			15	14			11	10	9	8	7						
SALEABLE	NOT APPLICABLE	34566-5853	0	H	ST GRY		79					74	73	72	71			68	67		65	64	63	62	61
							59		57			54		52									43	42	41
								38					33				29		27		25				
								18			15	14			11	10	9	8	7						
SALEABLE	NOT APPLICABLE	34566-5863	0	C	BLUE	72		70				66			63	62			59		57	56	55		53
						52	51					46		44		42		40	39		37	36		34	33
						73				32		30				26	25			22	21		19	18	
											15	14				10	9			6			3		
SALEABLE	NOT APPLICABLE	34566-5873	0	B	ST GRY	72										62	61								
						52				48	47	46		44	43		41	40							
						73						30										20	19	18	
										16	15	14										4			
SALEABLE	NOT APPLICABLE	34566-5883	0	B	ST GRY	72										62	61								
						52				48	47	46			43		41	40							
						73						30										20	19	18	
										16	15	14										4			

MX123 52/66/73/80-WAY RECEPTACLE ASSY SEALED PIN OUT SHEET

STATUS	GM PART #	HRNS CONN ASSY			TPA	GROMMET CAP																			
		MATERIAL/PART NUMBER	WIRE DRESS OPTION	KEY OPTION Fp	COLOR OPTION Fp	NUMBERS INDICATE CAVITIES OPEN FOR CIRCUITS Fp																			
SALEABLE	NOT APPLICABLE	34566-5893	0	C	BLUE				69		67	66				62		60			57		55	54	
						52	51	50		48		46	45	44		42					37		35	34	33
						73				32				28	27	26							19	18	
										16	15	14	13	12	11	10	9								
SALEABLE	NOT APPLICABLE	34566-5913	0	C	BLUE				69		67	66		64			61	60			57			54	
						52	51	50	49	48		46	45	44			41				37			34	33
						73				32				28	27		25							18	
										16	15	14	13	12	11	10	9								
SALEABLE	NOT APPLICABLE	34566-5933	0	C	BLUE	72		70		68		66			63	62			59		57	56	55		53
						52	51			48	47	46		44		42		40	39					34	33
						73				32		30				26	25		23	22	21				
											15	14				10	9		7	6	5	4			
SALEABLE	NOT APPLICABLE	34566-5943	0	C	BLUE	72		70		68	67	66			63	62			59		57	56	55		53
						52	51		49	48	47	46		44		42		40	39					34	33
						73				32		30			27	26	25			22	21	20			
											15	14	13			10	9			6	5	4			
SALEABLE	NOT APPLICABLE	34566-5953	0	A	BLACK		71	70	69				65	64	63	62	61	60		58	57	56	55	54	53
						52	51		49	48	47		45	44	43	42	41				37	36		34	
						73				32		30	29	28	27	26		24					19	18	
										16	15		13	12	11	10							3		
SALEABLE	NOT APPLICABLE	34566-5963	0	B	ST GRY	72	71	70		68	67	66				62	61	60	59	58	57	56	55	54	53
						52	51	50		48	47	46				42	41	40	39	38	37	36	35	34	33
						73				32	31	30	29	28	27	26	25	24						18	
										16	15	14	13			10	9	8					3		
SALEABLE	NOT APPLICABLE	34566-5973	0	C	BLUE	72		70		68	67	66			63	62			59		57	56	55		53
						52	51			48	47	46		44		42		40	39					34	33
						73				32		30			27	26	25			22	21		19	18	
											15	14				10	9			6	5	4	3		
SALEABLE	NOT APPLICABLE	34566-5983	0	C	BLUE				69		67	66		64		62		60			57		55	54	
						52	51	50		48		46	45	44		42					37		35	34	33
						73				32				28	27	26							19	18	
										16	15	14	13	12	11	10	9								
SALEABLE	NOT APPLICABLE	34566-5993	0	A	BLACK		71	70	69		67	66	65		63	62	61	60		58	57	56	55	54	53
						52	51	50	49		47		45	44	43	42	41	40	39		37	36	35	34	
						73				32	31	30	29	28	27	26	25	24	23		21	20	19	18	17
										16	15	14	13	12	11	10	9	8		6	5		3		1
SALEABLE	NOT APPLICABLE	34566-6013	0	B	ST GRY				69		67		65				61	60	59	58	57			54	53
							51	50	49	48	47	46	45		43			40	39		37			34	33
						73				32	31	30	29			26		24	23	22	21	20		18	
										16	15	14	13			10	9	8	7	6	5	4			
SALEABLE	NOT APPLICABLE	34566-6023	0	A	BLACK	72	71	70	69	68	67							60	59	58	57	56		54	53
						52	51	50	49	48	47		45	44	43			40	39	38	37	36	35	34	33
						73				32	31	30	29	28				24	23	22	21	20	19		17
										16	15		13	12	11	10			7	6	5	4	3	2	1
SALEABLE	NOT APPLICABLE	34566-6033	0	A	BLACK			70	69						63	62	61			58	57	56	55	54	53
						52	51		49					44	43	42	41				37	36		34	
						73				32			29	28	27	26					21		19	18	
										16	15		13	12	11	10		8			5		3		
SALEABLE	NOT APPLICABLE	34566-6043	0	B	ST GRY					68	67	66	65	64						58			55		
												46	45							38			35		
						73				32		30	29	28	27					22			19		17
										16						10									1
SALEABLE	NOT APPLICABLE	34566-6053	0	B	ST GRY	72										62	61								
						52				48	47	46			43		41	40							
						73						30										20	19	18	
										16	15	14										4		2	
SALEABLE	NOT APPLICABLE	34566-6063	0	C	BLUE				69		67	66		64		62		60			57		55	54	
						52	51	50		48		46	45	44		42					37		35	34	33
						73				32				28	27	26							19	18	17
										16	15	14	13	12	11	10	9								

MX123 52/66/73/80-WAY RECEPTACLE ASSY SEALED PIN OUT SHEET

STATUS	GM PART #	HRNS CONN ASSY			TPA	GROMMET CAP																				
		MATERIAL/PART NUMBER	WIRE DRESS OPTION	KEY OPTION Fp	COLOR OPTION Fp	NUMBERS INDICATE CAVITIES OPEN FOR CIRCUITS Fp																				
SALEABLE	NOT APPLICABLE	34566-6073	0	C	BLUE				69		67	66		64			61	60			57			54	
						52	51	50	49	48		46	45	44			41				37			34	33
						73				32				28	27		25							18	17
										16	15	14	13	12	11	10	9								
SALEABLE	NOT APPLICABLE	34566-6083	0	C	BLUE	72		70		68	67	66			63	62			59		57				53
						52	51			48	47	46		44		42		40	39		37	36		34	33
						73				32		30				26	25			22	21				
											15	14				10	9			6	5	4		2	
SALEABLE	NOT APPLICABLE	34566-6093	0	B	ST GRY	72		70			67				63	62	61	60	59						
						52						46			43		41	40							
						73									27							20	19	18	
										16		14			11							4			
SALEABLE	NOT APPLICABLE	34566-6113	0	A	BLACK	72	71	70	69	68		66	65	64	63	62	61	60		58	57	56	55	54	53
						52	51	50	49	48		46	45	44	43	42	41	40	39	38	37	36		34	33
						73				32	31	30	29	28	27	26	25		23	22	21	20	19	18	
										16	15	14	13	12	11	10	9	8	7	6	5	4	3	2	
SALEABLE	NOT APPLICABLE	34566-6123	0	C	BLUE				69		67	66		64		62		60			57			54	
						52	51	50		48		46	45	44		42					37			34	33
						73								28	27	26									
										16	15	14	13	12	11	10	9	8	7						
SALEABLE	NOT APPLICABLE	34566-6133	9	C	BLUE	72		70		68	67				63	62			59		57				53
						52	51			48	47			44		42		40	39	38	37	36		34	33
						73				32		30				26	25	24		22	21				
											15	14					9	8		6	5	4		2	
SALEABLE	NOT APPLICABLE	34566-6173	9	B	ST GRY						67	66													
										48	47						41								
						73				32	31	30	29		27	26	25	24		22	21		19	18	17
										16	15	14	13		11	10	9	8	7	6	5	4	3		1
SALEABLE	NOT APPLICABLE	34566-6183	9	A	BLACK							66													
										48	47						41								
						73				32	31	30	29		27	26	25	24		22	21		19	18	17
										16	15	14	13		11	10	9	8	7	6	5	4	3		1
SALEABLE	NOT APPLICABLE	34566-6193	9	B	ST GRY	72	71	70	69	68	67	66	65	64		62	61	60	59	58	57	56	55	54	
						52	51	50	49			46		44			41	40		38	37	36			
						73				32	31	30	29	28	27	26	25	24			21	20		18	17
										16	15	14	13	12		10	9	8	7	6	5	4	3	2	
SALEABLE	NOT APPLICABLE	34566-6213	9	A	BLACK						67	66													
										48	47						41								
						73				32	31	30	29		27	26	25	24		22	21		19	18	17
										16	15	14	13		11	10	9	8	7	6	5	4	3		1
SALEABLE	NOT APPLICABLE	34566-6223	9	C	BLUE	72		70		68		66			63	62			59		57				53
						52	51			48	47	46		44				40	39					34	33
						73				32		30			27	26	25			22	21	20			
											15	14	13			10	9			6	5	4			
SALEABLE	NOT APPLICABLE	34566-6233	9	B	ST GRY	72		70		68		66						60	59				55	54	53
						52		50		48		46						40	39				35	34	33
						73				32	31	30	29	28	27	26	25	24							17
										16						10		8						2	1
SALEABLE	NOT APPLICABLE	34566-6243	9	A	BLACK		71	70	69					64	63			60	59	58	57	56	55	54	53
						52	51	50	49				45	44	43	42	41		39		37	36		34	
						73				32		30		28		26							19	18	
										16	15	14		12		10							3		
SALEABLE	NOT APPLICABLE	34566-6253	9	C	BLUE	72		70		68	67	66			63	62			59		57				53
						52	51		49	48	47	46		44				40	39		37	36		34	33
						73				32		30			27	26	25	24		22	21	20			
											15	14	13			10	9	8		6	5	4		2	
SALEABLE	NOT APPLICABLE	34566-6263	9	B	ST GRY	72	71	70		68	67	66				62	61	60	59	58	57	56	55	54	53
						52	51	50		48	47	46				42	41	40	39	38	37	36	35	34	33
						73				32	31	30	29	28	27	26	25	24						18	17
										16	15	14	13			10		8					3	2	1

molex

MX123 52/66/73/80-WAY RECEPTACLE ASSY SEALED PIN OUT SHEET

STATUS	GM PART #	HRNS CONN ASSY			TPA	GROMMET CAP																			
		MATERIAL/PART NUMBER	WIRE DRESS OPTION	KEY OPTION Fp	COLOR OPTION Fp	NUMBERS INDICATE CAVITIES OPEN FOR CIRCUITS Fp																			
SALEABLE	NOT APPLICABLE	34566-6273	9	B	ST GRY		71	70	69				65	64	63	62	61	60		58	57	56	55	54	53
						52	51	50	49	48	47		45	44	43	42	41		39		37	36		34	
						73				32		30	29	28	27	26		24					19	18	
										16	15	14	13	12	11	10							3		
SALEABLE	NOT APPLICABLE	34566-6283	9	C	BLUE	72		70		68	67	66			63	62			59		57				53
						52	51			48	47	46		44				40	39					34	33
						73				32		30			27	26	25			22	21				
											15	14				10	9			6	5	4			
SALEABLE	NOT APPLICABLE	34566-6293	9	B	ST GRY	72	71	70		68	67	66				62	61	60	59	58	57	56	55	54	53
						52	51	50		48	47	46				42	41	40	39	38	37	36	35	34	33
						73				32	31	30	29	28	27	26	25	24							17
										16	15	14	13			10		8						2	1
SALEABLE	NOT APPLICABLE	34566-6313	9	B	ST GRY			70	69						63	62	61	60		58	57	56	55	54	53
						52	51	50	49					44	43	42	41		39		37	36		34	
						73				32			29	28	27	26							19	18	
										16	15	14	13	12	11	10							3		
SALEABLE	NOT APPLICABLE	34566-6323	9	B	ST GRY		71	70	69					64	63			60	59	58	57	56	55	54	53
						52	51	50	49				45	44	43	42	41		39		37	36		34	
						73				32		30		28		26							19	18	
										16	15	14		12		10							3		
SALEABLE	NOT APPLICABLE	34566-6333	9	C	BLUE	72		70		68	67	66			63	62			59		57	56	55		53
						52	51			48	47	46		44				40	39					34	33
						73				32		30			27	26	25			22	21		19	18	
											15	14				10	9			6	5	4	3		
SALEABLE	NOT APPLICABLE	34566-6343	9	A	BLACK			70	69						63	62	61	60		58	57	56	55	54	53
						52	51	50	49					44	43	42	41	40	39		37	36		34	
						73				32			29	28	27	26							19	18	17
										16	15	14	13	12	11	10							3	2	1
SALEABLE	NOT APPLICABLE	34566-6353	9	C	BLUE	72		70		68		66			63	62			59	58	57	56	55		53
						52	51			48	47	46		44				40	39					34	33
						73				32		30			27	26	25		23	22	21	20			17
											15	14	13			10	9		7	6	5	4			1
SALEABLE	NOT APPLICABLE	34566-6363	9	B	ST GRY	72		70		68		66						60	59				55	54	53
						52		50		48		46						40	39				35	34	33
						73				32	31	30	29	28	27	26	25	24	23				19	18	17
										16						10		8	7					2	1
SALEABLE	NOT APPLICABLE	34566-6373	9	A	BLACK	72	71	70	69		67			64	63			60	59	58	57	56	55	54	53
						52	51	50	49		47		45	44	43	42	41	40	39		37	36		34	
						73				32		30		28		26			23		21		19	18	17
										16	15	14		12		10		8			5		3	2	1
SALEABLE	NOT APPLICABLE	34566-6383	9	A	BLACK	72	71	70	69	68		66	65	64	63		61	60			57	56		54	53
						52	51	50	49	48		46	45	44	43	42	41	40	39	38	37	36		34	33
						73				32	31	30	29	28					23	22	21				
											15	14	13	12			9		7	6	5			2	1
SALEABLE	NOT APPLICABLE	34566-6393	9	C	BLUE		71	70	69		67	66	65	64		62	61	60		58	57		55	54	
						52	51	50	49	48	47	46	45	44		42	41			38	37		35	34	33
						73				32				28	27	26	25						19	18	17
										16	15	14	13	12	11	10	9								
SALEABLE	NOT APPLICABLE	34566-6413	9	B	ST GRY	72				68	67				63	62	61	60	59				55		
						52				48	47	46		44	43		41	40		38	37	36	35		
						73						30			27							20	19	18	17
										16	15	14			11			8				4			1
SALEABLE	NOT APPLICABLE	34566-6423	9	C	BLUE	72	71	70	69		67	66	65	64								56		54	
						52	51	50	49		47	46	45	44					39	38				34	
						73					31	30	29	28		26	25		23	22	21				17
										16	15	14	13	12			9		7	6	5				
SALEABLE	NOT APPLICABLE	34566-6433	9	A	BLACK	72		70			67				63			60	59	58	57	56	55		
						52	51			48	47	46			43	42		40	39	38	37	36	35		
						73								28	27					22	21			18	17
														12	11		9		7					2	1

molex

MX123 52/66/73/80-WAY RECEPTACLE ASSY SEALED PIN OUT SHEET

STATUS	GM PART #	HRNS CONN ASSY			TPA	GROMMET CAP																				
		MATERIAL/PART NUMBER	WIRE DRESS OPTION	KEY OPTION Fp	COLOR OPTION Fp	NUMBERS INDICATE CAVITIES OPEN FOR CIRCUITS Fp																				
SALEABLE	NOT APPLICABLE	34566-6443	9	B	ST GRY	72	71	70	69	68	67	66	65	64	63		61	60			57	56	55		
						52	51	50	49	48	47	46	45	44	43		41	40		38	37	36	35	34	33
						73				32	31	30	29	28		26	25	24	23	22	21	20	19	18	17
										16	15	14	13	12	11		9	8	7	6	5	4	3	2	1
SALEABLE	NOT APPLICABLE	34566-6453	0	C	BLUE		71	70	69		67		65	64		62	61	60			57			54	
						52	51	50	49	48	47	46	45	44		42	41				37			34	33
						73				32				28	27	26	25							18	17
										16	15	14	13	12	11	10	9	8	7						
SALEABLE	NOT APPLICABLE	34566-6463	0	B	ST GRY	72				68	67					62	61						55		
						52				48	47	46			43			40							
						73						30										20	19	18	
										16	15	14						8				4		2	
SALEABLE	NOT APPLICABLE	34566-6473	9	C	BLUE			70	69		67	66		64		62		60			57		55	54	
						52	51	50		48		46	45	44		42					37		35	34	33
						73				32				28	27	26							19	18	17
										16	15	14	13	12	11	10	9	8	7						
SALEABLE	NOT APPLICABLE	34566-6483	9	A	BLACK	72	71	70	69	68		66	65	64	63		61	60			57	56		54	53
						52	51	50	49	48		46	45	44	43			40	39	38	37	36		34	33
						73				32	31	30	29	28		26	25		23	22	21	20			
											15	14	13	12			9		7	6	5			2	
SALEABLE	NOT APPLICABLE	34566-6493	9	B	ST GRY	72		70								62	61						55		
						52				48	47	46			43		41	40							
						73						30										20	19	18	
										16	15	14										4		2	
SALEABLE	NOT APPLICABLE	34566-6513	0	B	ST GRY	72				68	67					62	61						55	54	
						52						46			43			40							
						73																20	19	18	17
										16	15	14						8				4	3	2	
SALEABLE	NOT APPLICABLE	34566-6523	0	B	ST GRY					68	67			64					59	58				54	
												46	45						39	38					
						73				32		30	29	28	27				23	22					17
											15		13		11	10				6					1
SALEABLE	NOT APPLICABLE	34566-6533	9	B	ST GRY					68	67			64											
												46	45												
						73				32		30	29	28	27										17
																10			7						1
SALEABLE	NOT APPLICABLE	34566-6543	9	A	BLACK	72	71	70	69	68		66	65	64	63		61	60			57	56		54	53
						52	51	50	49	48		46	45	44	43			40	39	38	37	36		34	33
						73				32	31	30	29	28		26	25		23	22	21	20			
											15	14	13	12			9		7	6	5	4		2	
SALEABLE	NOT APPLICABLE	34566-6553	9	A	BLACK	72	71	70	69		67			64	63			60	59	58	57	56	55	54	53
						52	51	50	49		47		45	44	43	42	41	40	39		37	36		34	
						73				32		30		28		26							19	18	17
											15	14				10		8			5		3	2	1
SALEABLE	NOT APPLICABLE	34566-6563	9	C	BLUE	72		70		68		66			63	62			59	58	57				53
						52	51			48	47	46		44				40	39					34	33
						73				32		30			27	26	25		23	22	21	20			17
							15	14	13							10	9		7	6	5	4			1
SALEABLE	NOT APPLICABLE	34566-6573	9	A	BLACK	72	71	70	69		67			64	63			60	59	58	57	56	55	54	53
						52	51	50	49		47		45	44	43	42	41	40	39		37	36		34	
						73				32		30		28		26			23		21		19	18	
										16	15	14		12		10		8			5		3		
SALEABLE	NOT APPLICABLE	34566-6583	9	A	BLACK			70	69						63	62	61	60		58	57	56	55	54	53
						52	51	50	49					44	43	42	41	40	39		37	36		34	
						73				32			29	28	27	26							19	18	
										16	15	14	13	12	11	10							3		
SALEABLE	NOT APPLICABLE	34566-6593	0	C	BLUE				69		67			64		62		60			57		55	54	
						52	51	50		48		46	45	44		42					37		35	34	33
						73				32				28	27	26						20	19	18	17
										16	15	14	13	12	11	10	9								

MX123 52/66/73/80-WAY RECEPTACLE ASSY SEALED PIN OUT SHEET

STATUS	GM PART #	HRNS CONN ASSY			TPA	GROMMET CAP																				
		MATERIAL/PART NUMBER	WIRE DRESS OPTION	KEY OPTION Fp	COLOR OPTION Fp	NUMBERS INDICATE CAVITIES OPEN FOR CIRCUITS Fp																				
SALEABLE	NOT APPLICABLE	34566-6613	0	A	BLACK	72	71	70	69			66		64	63		61	60			57	56		54	53
						52	51	50	49			46	45	44	43			40	39	38	37	36		34	33
						73				32	31	30	29	28		26	25		23	22	21				
										16	15	14	13	12			9		7	6	5			2	1
SALEABLE	NOT APPLICABLE	34566-6623	9	B	ST GRY					68	67			64					59	58				54	
												46	45						39	38					
						73				32		30	29	28	27				23	22					17
											15		13		11	10				6					1
SALEABLE	NOT APPLICABLE	34566-6633	9	C	BLUE				69		67	66		64		62		60			57			54	
						52	51	50		48		46	45	44		42					37			34	33
						73								28	27	26									
										16	15	14	13	12	11	10	9	8	7						
SALEABLE	NOT APPLICABLE	34566-6643	9	C	BLUE		71			68	67		65	64	63		61	60		58	57			54	
						52	51	50		48			45		43		41			38	37			34	33
						73								28	27		25							18	
										16	15	14	13	12	11	10	9	8	7						
SALEABLE	NOT APPLICABLE	34566-6653	9	B	ST GRY	72				68						62	61	60	59				55		
						52				48	47	46		44	43		41	40		38	37	36	35		
						73						30										20	19	18	
										16		14						8			5	4			1
SALEABLE	NOT APPLICABLE	34566-6663	9	A	BLACK	72	71	70	69	68		66	65	64	63			60			57	56		54	
						52	51	50	49	48		46	45	44	43	42		40	39	38	37	36		34	
						73				32	31	30	29	28		26	25		23	22	21	20			
											15	14	13	12			9		7	6	5	4		2	
SALEABLE	NOT APPLICABLE	34566-6673	9	B	ST GRY	72	71	70	69	68	67	66	65	64	63		61	60	59		57	56	55		
						52	51	50	49	48	47	46	45	44	43		41	40	39	38	37	36	35	34	33
						73				32	31	30	29	28		26		24	23	22	21	20	19	18	17
										16	15	14	13	12	11		9	8	7	6	5	4	3	2	1
SALEABLE	NOT APPLICABLE	34566-6683	9	A	BLACK	72		70			67				63			60	59	58	57				
						52				48	47	46			43	42		40	39	38	37				
						73				32	31	30	29	28	27					22	21				
										16	15	14	13	12	11		9			6				2	1
SALEABLE	NOT APPLICABLE	34566-6693	9	C	BLUE	72	71	70	69		67	66	65	64								56		54	
						52	51	50	49		47	46	45	44					39	38				34	
						73					31	30	29	28		26	25	24	23	22	21				17
										16	15	14	13	12			9	8	7	6	5				
SALEABLE	TBD	34822-0063	9	A	BLACK		63	62	61	60	59					54	53		51		49	66			
							47									38	37		35		33				
						65								28			25			22	21	20	19	18	17
											15	14	13					8	7				3	2	1
SALEABLE	NOT APPLICABLE	34566-6713	9	A	BLACK	72	71	70	69	68		66	65	64	63		61	60			57	56		54	53
						52	51	50	49	48		46	45	44	43	42	41	40	39	38	37	36		34	33
						73				32	31	30	29	28		26	25		23	22	21				
											15	14	13	12			9		7	6	5			2	1
SALEABLE	NOT APPLICABLE	34566-6723	0	H	ST GRY		79					74	73						67		65	64	63	62	61
							59						53	52								44	43	42	41
								38					33						27		25				
								18			15	14	13	12		10	9	8	7						
SALEABLE	NOT APPLICABLE	34566-6733	0	G	BLUE			78	77		75	74		72		70						64	63		
						60		58	57		55	54		52	51	50	49		47		45				
						40	39	38	37				33	32	31				27	26					
						20	19	18	17							10	9	8		6		4	3	2	1
SALEABLE	NOT APPLICABLE	34566-6743	9	C	BLUE		71		69	68	67		65	64	63		61	60			57				
						52	51	50		48		46	45		43		41				37			34	33
						73								28	27		25								
										16	15	14	13	12	11	10	9	8	7						
SALEABLE	NOT APPLICABLE	34566-6753	9	A	BLACK	72	71	70	69	68		66	65	64			61	60			57	56		54	53
						52	51	50	49	48		46	45	44	43	42		40	39	38	37	36		34	33
						73					31	30	29	28					23	22	21	20			
											15	14	13	12					7	6	5	4		2	

molex

MX123 52/66/73/80-WAY RECEPTACLE ASSY SEALED PIN OUT SHEET

STATUS	GM PART #	HRNS CONN ASSY			TPA	GROMMET CAP																			
		MATERIAL/PART NUMBER	WIRE DRESS OPTION	KEY OPTION Fp	COLOR OPTION Fp	NUMBERS INDICATE CAVITIES OPEN FOR CIRCUITS Fp																			
SALEABLE	NOT APPLICABLE	34566-6763	9	B	ST GRY	72				68						62	61						55		
						52		50	49			46	45		43			40						34	
						73							29							22	21	20	19	18	
										16		14						8		6	5	4			
SALEABLE	NOT APPLICABLE	34566-6773	0	C	BLUE	72		70		68		66			63	62			59	58	57				53
						52	51		49	48	47	46		44		42		40	39					34	33
						73				32		30				26	25			22	21		19	18	17
							15	14								10	9			6	5	4			1
SALEABLE	NOT APPLICABLE	34566-6783	0	B	ST GRY	72		70		68		66						60	59				55	54	53
						52		50		48		46			43			40	39				35	34	33
						73				32	31	30	29	28	27	26	25	24	23						17
										16						10		8	7					2	1
SALEABLE	NOT APPLICABLE	34566-6793	0	B	ST GRY	72		70		68		66		64	63			60	59				55	54	53
						52		50		48		46			43			40	39				35	34	33
						73				32	31	30	29	28	27	26	25	24	23			20			17
										16						10		8	7		5	4		2	1
SALEABLE	NOT APPLICABLE	34566-6813	9	A	BLACK		71	70	69	68	67		65	64	63	62	61	60		58	57	56	55	54	53
						52	51	50	49	48	47		45	44	43	42	41	40	39		37	36		34	
						73				32		30	29	28	27	26	25	24			21			18	
										16	15	14	13	12	11	10	9	8			5		3		
SALEABLE	NOT APPLICABLE	34566-6823	9	C	BLUE	72		70		68	67	66			63	62			59		57				53
						52	51		49	48	47	46		44			41	40	39		37	36	35	34	33
						73				32		30			27	26	25	24		22	21	20			
							15	14	13							10	9	8		6	5	4		2	
SALEABLE	NOT APPLICABLE	34566-6833	0	A	BLACK			70	69						63			60	59	58	57	56	55	54	53
						52	51		49	48	47			44	43	42	41	40			37	36		34	33
						73				32				28		26							19	18	
										16	15			12		10							3		
SALEABLE	NOT APPLICABLE	34566-6843	0	A	BLACK	72	71	70	69	68		66	65	64	63		61	60			57	56		54	53
						52	51	50	49	48		46	45	44	43			40	39	38	37	36		34	33
						73				32	31	30	29	28		26	25		23	22	21	20			17
							15	14	13	12							9		7	6	5	4		2	
SALEABLE	NOT APPLICABLE	34566-6853	0	C	BLUE				69		67	66		64		62	61	60			57		55	54	
						52	51	50	49	48		46	45	44		42	41				37		35	34	33
						73				32				28	27	26	25						19	18	17
										16	15	14	13	12	11	10	9	8	7						
SALEABLE	NOT APPLICABLE	34566-6863	0	A	BLACK	72	71	70	69	68		66	65	64	63		61	60			57	56		54	53
						52	51	50	49	48		46	45	44	43	42		40	39	38	37	36		34	33
						73				32	31	30	29	28		26	25		23	22	21	20			
							15	14	13	12							9		7	6	5	4		2	
SALEABLE	NOT APPLICABLE	34566-6873	9	B	ST GRY	72				68	67				63	62	61	60	59				55		53
						52				48	47	46		44	43		41	40		38	37	36	35		
						73						30			27							20	19	18	17
										16	15	14			11			8				4			1
SALEABLE	NOT APPLICABLE	34566-6883	9	A	BLACK	72		70			67				63			60	59	58	57	56	55		
						52	51			48	47	46			43	42		40	39	38	37	36	35		
						73								28	27					22	21			18	17
														12	11		9		7		5			2	1
SALEABLE	NOT APPLICABLE	34566-6893	0	B	ST GRY	72	71	70	69	68	67	66	65	64	63	62	61	60	59		57	56	55		
						52	51	50	49	48	47	46	45	44	43		41	40	39	38	37	36	35	34	33
						73				32	31	30	29	28		26		24	23	22	21	20	19	18	17
										16	15	14	13	12	11		9	8	7	6	5	4	3	2	1
SALEABLE	NOT APPLICABLE	34566-6913	9	A	BLACK	72	71	70	69	68	67	66	65	64	63			60	59	58	57	56	55	54	
						52	51	50	49	48	47	46	45	44	43	42		40	39	38	37	36	35	34	
						73				32	31	30	29	28	27	26	25		23	22	21	20		18	17
										16	15	14	13	12	11		9		7	6	5	4		2	1
SALEABLE	NOT APPLICABLE	34566-6923	9	C	BLUE	72	71	70	69		67	66	65	64			61	60		58	57	56		54	
						52	51	50	49	48	47	46	45	44			41		39	38	37			34	33
						73				32	31	30	29	28	27	26	25	24	23	22	21			18	17
										16	15	14	13	12	11	10	9	8	7	6	5				

molex

MX123 52/66/73/80-WAY RECEPTACLE ASSY SEALED PIN OUT SHEET

STATUS	GM PART #	HRNS CONN ASSY			TPA	GROMMET CAP																			
		MATERIAL/PART NUMBER	WIRE DRESS OPTION	KEY OPTION Fp	COLOR OPTION Fp	NUMBERS INDICATE CAVITIES OPEN FOR CIRCUITS Fp																			
SALEABLE	NOT APPLICABLE	34566-6933	9	B	ST GRY	72				68	67				63	62	61	60	59				55		53
						52				48	47	46		44	43		41	40		38	37	36	35		
						73						30			27					22	21	20	19	18	17
										16	15	14			11			8		6		4			1
SALEABLE	NOT APPLICABLE	34566-6943	9	A	BLACK	72	71	70	69	68		66	65	64	63		61	60			57	56		54	53
						52	51	50	49	48		46	45	44	43	42	41	40	39	38	37	36		34	33
						73				32	31	30	29	28					23	22	21				
											15	14	13	12					7	6	5			2	1
SALEABLE	NOT APPLICABLE	34566-6953	0	A	BLACK	72	71	70	69			66		64	63		61	60			57	56		54	53
						52	51	50	49			46	45	44	43			40	39	38	37	36		34	33
						73				32	31	30	29	28		26	25		23	22	21	20			
										16	15	14	13	12			9		7	6	5	4		2	1
SALEABLE	NOT APPLICABLE	34566-6963	0	B	ST GRY	72		70		68	67					62	61						55		
						52				48	47	46			43			40							
						73						30										20	19	18	
										16	15	14						8				4		2	
SALEABLE	NOT APPLICABLE	34566-6973	0	C	BLUE		71	70	69		67		65	64		62	61	60			57		55	54	
						52	51	50	49	48	47	46	45	44		42	41				37		35	34	33
						73				32				28	27	26	25						19	18	17
										16	15	14	13	12	11	10	9	8	7						
SALEABLE	NOT APPLICABLE	34566-6983	0	C	BLUE		71		69		67		65	64		62		60			57			54	
						52	51	50		48	47	46	45	44		42					37			34	33
						73								28	27	26								18	
										16	15	14	13	12	11	10	9	8	7						
SALEABLE	NOT APPLICABLE	34566-6993	0	G	BLUE			78	77	76									67	66	65				
						40	39	38	37	36	35	34	33	32			29	28			25				21
						20	19	18	17	16	15	14	13	12									3		1
SALEABLE	NOT APPLICABLE	34566-7013	9	A	BLACK		71	70	69					64	63	62	61	60	59	58	57	56	55	54	53
						52	51	50	49				45	44	43	42	41		39		37	36		34	
						73				32			29	28	27	26							19	18	
										16	15	14	13	12	11	10							3		
SALEABLE	NOT APPLICABLE	34566-7023	0	A	BLACK	72	71	70	69	68		66	65	64			61	60			57	56		54	53
						52	51	50	49	48		46	45	44	43			40	39	38	37	36		34	33
						73					31	30	29	28		26	25		23	22	21	20			
											15	14	13	12			9		7	6	5	4		2	
SALEABLE	NOT APPLICABLE	34566-7033	0	A	BLACK			70	69				65		63	62	61	60		58	57	56	55	54	53
						52	51		49					44	43	42	41				37	36		34	
						73				32			29	28	27	26					21		19	18	
										16	15		13	12	11	10		8			5		3		
SALEABLE	NOT APPLICABLE	34566-7043	0	B	ST GRY	72				68	67				63	62	61	60	59				55		
						52						46			43		41	40							
						73									27							20	19	18	
										16		14			11			8				4			
SALEABLE	NOT APPLICABLE	34566-7053	0	C	BLUE		71		69		67		65	64		62	61	60			57			54	
						52	51	50	49	48	47	46	45	44		42	41				37			34	33
						73								28	27	26	25								
										16	15	14	13	12	11	10	9	8	7						
SALEABLE	NOT APPLICABLE	34566-7063	0	C	BLUE	72		70		68	67	66			63	62			59		57				53
						52	51			48	47	46		44				40	39					34	33
						73				32		30				26	25			22	21				
											15	14	13			10	9			6	5	4			
SALEABLE	NOT APPLICABLE	34566-7073	9	F	NATURAL				69	68										58	57				
															43	42				38	37				33
						73						30											19	18	17
																							3	2	1
SALEABLE	NOT APPLICABLE	34566-7083	9	B	ST GRY																				
						73																			
										16	15	14	13	12	11	10		8	7				3	2	1

molex

MX123 52/66/73/80-WAY RECEPTACLE ASSY SEALED PIN OUT SHEET

STATUS	GM PART #	HRNS CONN ASSY			TPA	GROMMET CAP																			
		MATERIAL/PART NUMBER	WIRE DRESS OPTION	KEY OPTION Fp	COLOR OPTION Fp	NUMBERS INDICATE CAVITIES OPEN FOR CIRCUITS Fp																			
SALEABLE	NOT APPLICABLE	34566-7093	9	B	ST GRY	72	71	70	69	68	67	66	65	64	63				59						53
						52	51	50	49	48	47	46	45	44	43				39					34	33
						73				32	31	30	29	28	27	26	25	24	23						17
										16	15	14	13	12	11	10		8	7				3	2	1
SALEABLE	NOT APPLICABLE	34566-7113	9	G	BLUE	80	79	78		76					71				67						
						60	59	58	57			54			51	50	49	48	47			44			41
						40	39		37				33	32		30	29	28	27		25	24			
						20	19	18						12	11		9	8			5		3	2	
SALEABLE	NOT APPLICABLE	34566-7123	9	G	BLUE	80	79	78							71				67						
						60	59	58	57			54			51	50	49	48	47			44			41
						40	39						33	32		30	29	28	27		25	24			
						20	19	18						12	11		9	8			5		3	2	
SALEABLE	NOT APPLICABLE	34566-7133	9	B	ST GRY															58				54	53
																42									
						73									27		25								
																10									
SALEABLE	NOT APPLICABLE	34566-7143	0	A	BLACK			70	69						63			60	59	58	57	56	55	54	53
						52	51		49	48	47			44	43	42	41				37	36		34	33
						73				32				28		26							19	18	
										16	15			12		10							3		
SALEABLE	NOT APPLICABLE	34566-7153	0	C	BLUE	72		70		68		66			63	62			59	58	57				53
						52	51		49	48	47	46		44		42		40	39		37	36		34	33
						73				32		30				26	25	24		22	21		19	18	17
											15	14				10	9	8		6	5	4		2	1
SALEABLE	NOT APPLICABLE	34566-7163	0	A	BLACK	72		70	69	68	67						61	60				56	55	54	53
						52		50	49	48	47		45	44	43		41	40					35	34	33
						73							29	28			25	24				20	19	18	17
										16	15				11		9	8	7	6	5	4	3	2	1
SALEABLE	NOT APPLICABLE	34566-7173	0	B	ST GRY					68	67	66	65	64	63					58			55		
												46	45		43					38				34	
						73				32		30	29	28	27					22					17
										16						10									
SALEABLE	NOT APPLICABLE	34566-7183	0	B	ST GRY	72	71	70	69	68	67	66	65	64	63	62	61	60	59	58	57	56	55	54	53
						52	51	50	49	48	47	46	45	44	43	42	41	40	39	38	37	36	35	34	33
						73				32	31	30	29	28	27	26	25	24		22	21	20	19	18	17
										16	15	14	13	12	11	10	9	8	7	6	5	4	3	2	1
SALEABLE	NOT APPLICABLE	34566-7193	0	A	BLACK	72		70	69						63	62	61	60		58	57	56	55	54	53
						52	51		49					44	43	42	41				37	36		34	
						73				32			29	28	27	26							19	18	17
										16	15		13	12	11	10							3	2	1
SALEABLE	NOT APPLICABLE	34566-7213	0	A	BLACK			70	69						63					58		56		54	
						52	51		49		47			44	43	42	41		39			36		34	
						73				32				28		26							19	18	17
										16				12		10							3	2	1
SALEABLE	NOT APPLICABLE	34566-7223	0	C	BLUE	72		70		68		66			63	62			59		57				53
						52	51			48	47	46		44		42		40	39		37	36		34	33
						73				32		30				26	25	24		22	21	20			
							15	14	13							10	9	8		6	5	4		2	
SALEABLE	NOT APPLICABLE	34566-7233	9	A	BLACK	72										62	61				57	56	55	54	
						52	51					46	45		43			40			37		35	34	
						73				32		30	29				25					20			
										16	15		13		11	10	9					4			
SALEABLE	NOT APPLICABLE	34566-7243	9	A	BLACK	72										62	61			58	57	56	55	54	
						52	51			48		46	45		43		41	40			37		35	34	
						73				32		30	29				25					20			
										16	15		13		11	10	9					4	3		
SALEABLE	TBD	34822-0073	0	A	BLACK		63	62	61	60	59					54	53		51		49	66			
							47									38	37		35		33				
						65								28			25			22	21	20	19	18	17
											15	14	13					8	7				3	2	1

molex

MX123 52/66/73/80-WAY RECEPTACLE ASSY SEALED PIN OUT SHEET

STATUS	GM PART #	HRNS CONN ASSY			TPA	GROMMET CAP																				
		MATERIAL/PART NUMBER	WIRE DRESS OPTION	KEY OPTION Fp	COLOR OPTION Fp	NUMBERS INDICATE CAVITIES OPEN FOR CIRCUITS Fp																				
SALEABLE	TBD	34822-0083	9	A	BLACK		63	62	61	60	59					54	53		51		49	66				
							47								39	38	37		35		33					
						65								28			25			22	21	20	19	18	17
											15	14	13					8	7				3	2	1
SALEABLE	NOT APPLICABLE	34566-7253	0	B	ST GRY	72										62	61								
						52				48	47	46		44	43		41	40							
						73						30										20	19	18	
										16		14										4			
SALEABLE	NOT APPLICABLE	34566-7263	0	C	BLUE				69		67	66		64		62		60			57			54	
						52	51	50		48		46	45	44		42					37			34	33
						73								28	27	26								18	
										16	15	14	13	12	11	10	9	8	7						
SALEABLE	NOT APPLICABLE	34566-7273	0	C	BLUE				69		67	66		64		62		60			57		55	54	
						52	51	50		48		46	45	44		42					37		35	34	33
						73				32				28	27	26							19	18	17
										16	15	14	13	12	11	10	9	8	7						
SALEABLE	NOT APPLICABLE	34566-7283	0	C	BLUE				69		67	66		64			61	60			57			54	
						52	51	50	49	48		46	45	44			41				37			34	33
						73								28	27		25							18	
										16	15	14	13	12	11	10	9	8	7						
SALEABLE	NOT APPLICABLE	34566-7293	9	A	BLACK	72	71	70	69	68	67	66	65	64	63				59						53
						52	51	50	49	48	47	46	45	44	43				39					34	33
						73				32	31	30	29	28	27	26	25	24	23						17
										16	15	14	13	12	11	10		8	7				3	2	1
SALEABLE	NOT APPLICABLE	34566-7313	0	B	ST GRY	72					67					62	61						55		
						52				48	47	46			43			40							
						73						30								22	21	20	19	18	
										16		14								6		4			
SALEABLE	NOT APPLICABLE	34566-7333	9	B	ST GRY	72	71	70	69	68	67	66	65	64	63	62	61	60	59		57	56	55		
						52	51	50	49	48	47	46	45	44	43		41	40	39	38	37	36	35	34	33
						73				32	31	30	29	28		26		24	23	22	21	20	19	18	17
										16	15	14	13	12	11		9	8	7	6	5	4	3	2	1
SALEABLE	NOT APPLICABLE	34566-7343	9	B	ST GRY					68	67			64	63				59	58			55	54	
												46	45	44	43				39	38			35		
						73				32		30	29	28	27				23	22			19		17
							15		13	12		10	9							6		4			1
SALEABLE	NOT APPLICABLE	34566-7353	9	C	BLUE				69		67	66		64		62		60			57		55	54	
						52	51	50		48	47	46	45	44		42					37		35	34	33
						73				32				28	27	26							19	18	17
										16	15	14	13	12	11	10	9	8	7						
SALEABLE	NOT APPLICABLE	34566-7363	0	B	ST GRY	72		70		68						62	61	60	59				55		
						52						46		44	43		41	40							
						73																20	19	18	17
										16	15	14						8				4			
SALEABLE	NOT APPLICABLE	34566-7373	0	A	BLACK	72	71	70	69	68		66	65	64			61	60			57	56		54	53
						52	51	50	49	48		46	45	44	43	42		40	39	38	37	36		34	33
						73					31	30	29	28		26	25		23	22	21	20			
							15	14	13	12			9		7	6	5	4		2					
SALEABLE	NOT APPLICABLE	34566-7383	0	C	BLUE		71	70			67	66	65	64			61	60			57			54	
						52	51	50	49	48	47		45	44			41				37			34	33
						73				32				28	27		25								17
										16	15	14	13	12	11	10	9	8	7						
SALEABLE	NOT APPLICABLE	34566-7393	0	B	ST GRY	72										62	61						55		
						52				48	47	46		44	43			40							
						73																20	19	18	
										16	15	14										4			
SALEABLE	NOT APPLICABLE	34566-7413	0	A	BLACK	72	71	70	69	68		66	65	64	63		61	60			57	56		54	53
							51	50	49	48		46	45	44	43	42		40	39	38	37	36		34	33
						73				32	31	30	29	28		26	25		23	22	21	20			
							15	14	13	12			9		7	6	5	4		2					

molex

MX123 52/66/73/80-WAY RECEPTACLE ASSY SEALED PIN OUT SHEET

STATUS	GM PART #	HRNS CONN ASSY			TPA	GROMMET CAP																				
		MATERIAL/PART NUMBER	WIRE DRESS OPTION	KEY OPTION Fp	COLOR OPTION Fp	NUMBERS INDICATE CAVITIES OPEN FOR CIRCUITS Fp																				
SALEABLE	NOT APPLICABLE	34566-7423	0	C	BLUE			70	69		67			64			61	60			57			54	
						52	51	50	49	48	47	46	45	44			41				37			34	33
						73				32				28	27		25							18	17
										16	15	14	13	12	11	10	9	8	7						
SALEABLE	NOT APPLICABLE	34566-7433	0	B	ST GRY	72				68						62	61	60	59				55		
						52				48	47	46		44	43		41	40		38	37	36	35		
						73						30										20	19	18	17
										16	15	14						8				4			1
SALEABLE	NOT APPLICABLE	34566-7443	0	A	BLACK	72	71	70	69	68		66	65	64	63			60			57	56		54	
						52	51	50	49	48		46	45	44	43	42		40	39	38	37	36		34	
						73					31	30	29	28		26	25		23	22	21	20			
											15	14	13	12			9		7	6	5	4		2	
SALEABLE	NOT APPLICABLE	34566-7453	0	C	BLUE		71	70			67	66	65	64			61	60		58	57			54	
						52	51	50	49	48	47		45	44			41			38	37			34	33
						73				32				28	27		25							18	17
										16	15	14	13	12	11	10	9	8	7						
SALEABLE	NOT APPLICABLE	34566-7463	0	B	ST GRY	72				68						62	61						55		
						52				48	47	46			43			40							
						73						30								22	21	20	19	18	
										16	15	14						8		6		4		2	
SALEABLE	NOT APPLICABLE	34566-7473	0	B	ST GRY	72				68	67				63	62	61						55		
						52				48	47	46			43			40							
						73						30			27					22	21	20	19	18	
										16		14			11			8		6		4			
SALEABLE	NOT APPLICABLE	34566-7483	0	B	ST GRY	72				68						62	61						55		
						52				48	47	46			43			40							
						73						30								22	21	20	19	18	17
										16	15	14						8		6		4		2	
SALEABLE	NOT APPLICABLE	34566-7493	0	C	BLUE				69		67			64		62		60			57		55	54	
						52	51	50		48	47	46	45	44		42					37		35	34	33
						73				32				28	27	26							19	18	17
										16	15	14	13	12	11	10	9	8	7						
SALEABLE	NOT APPLICABLE	34566-7513	9	A	BLACK	72	71	70	69	68		66	65	64	63		61	60			57	56		54	53
						52	51	50	49	48		46	45	44	43			40	39	38	37	36		34	33
						73				32	31	30	29	28					23	22	21	20			
											15	14	13	12					7	6	5	4		2	
SALEABLE	NOT APPLICABLE	34566-7523	0	A	BLACK	72								64		62	61		59	58	57	56	55	54	
						52	51			48	47	46	45		43		41	40			37				33
						73				32		30	29		27	26	25	24				20			
										16	15		13		11	10	9					4			
SALEABLE	NOT APPLICABLE	34566-7533	0	G	BLUE	80	79	78							71	70			67						
						60	59	58	57			54			51	50	49	48	47		45	44		42	41
						40	39		37	36		34	33	32		30	29	28	27		25	24	23	22	21
						20	19	18					13	12	11		9	8			5		3	2	1
~~SALEABLE~~	~~NOT APPLICABLE~~	34566-7543 ~~SAME AS P/N 34566-1553~~	~~0~~	~~A~~	~~BLACK~~																				
						73																			
~~SALEABLE~~	~~NOT APPLICABLE~~	34566-7553 ~~SAME AS P/N 34566-1983~~	~~0~~	~~B~~	~~ST GRY~~																				
						73																			
~~SALEABLE~~	~~NOT APPLICABLE~~	34566-7563 ~~SAME AS P/N 34566-1993~~	~~0~~	~~C~~	~~BLUE~~																				
						73																			
SALEABLE	NOT APPLICABLE	34566-7573	0	B	ST GRY	72		70		68						62	61						55		
						52				48	47	46			43			40							
						73						30								22	21	20	19	18	17
										16	15	14						8		6		4		2	

molex

MX123 52/66/73/80-WAY RECEPTACLE ASSY SEALED PIN OUT SHEET

STATUS	GM PART #	HRNS CONN ASSY			TPA	GROMMET CAP																				
		MATERIAL/PART NUMBER	WIRE DRESS OPTION	KEY OPTION Fp	COLOR OPTION Fp	NUMBERS INDICATE CAVITIES OPEN FOR CIRCUITS Fp																				
SALEABLE	NOT APPLICABLE	34566-7583	9	A	BLACK	72		70			67				63			60	59	58	57				
						52				48	47	46			43	42		40	39	38	37				
						73				32	31	30	29	28	27					22	21				
										16	15	14	13	12	11		9		7					2	1
SALEABLE	NOT APPLICABLE	34566-7593	9	A	BLACK	72		70	69	68				64		62	61		59	58	57	56	55	54	53
						52	51	50		48	47	46	45		43		41	40			37		35		33
						73				32		30	29		27	26	25	24				20	19	18	
										16	15	14	13	12	11	10	9	8			5	4	3	2	1
SALEABLE	TBD	34822-0093	9	A	BLACK		63	62	61	60	59					54	53		51		49	66			
							47									38	37		35		33				
						65								28			25			22	21	20	19	18	17
											15	14	13					8	7				3	2	1
SALEABLE	TBD	34822-0103	0	A	BLACK		63					58	57	56	55	54	53		51		49	66			
							47						41	40		38	37		35		33				
						65								28	27	26	25			22				18	17
												14							7			4	3	2	1
SALEABLE	TBD	34822-0113	9	A	BLACK				61	60	59	58		56	55				51		49	66			
												42													
						65																			17
																10		8						2	
SALEABLE	NOT APPLICABLE	34822-0123	9	C	BLUE	64	63	62	61	60					55	54						66			
						48	47	46	45			42			39			36	35						
						65					31				27								19		
										16						10				6		4			1
SALEABLE	NOT APPLICABLE	34566-7613	9	H	ST GRY	80	79	78			75				71	70			67						
						60	59		57			54			51	50	49	48	47		45	44		42	41
						40	39		37	36		34	33	32		30	29	28	27		25	24	23	22	21
						20		18					13	12	11		9	8			5		3	2	1
SALEABLE	NOT APPLICABLE	34566-7623	9	G	BLUE	80	79	78			75				71	70			67						
						60	59	58	57			54			51	50	49	48	47		45	44		42	41
						40	39		37	36		34	33	32		30	29	28	27		25	24	23	22	21
						20	19	18					13	12	11		9	8			5		3	2	1
SALEABLE	TBD	34822-0133	0	C	BLUE	64	63	62	61	60					55	54						66			
						48	47	46	45			42			39			36	35						
						65					31				27								19		
										16						10				6		4			1
SALEABLE	NOT APPLICABLE	34566-7633	9	A	BLACK	72	71	70	69	68	67	66	65	64	63			60	59	58	57	56	55	54	
						52	51	50	49	48	47	46	45	44	43	42	41	40	39	38	37	36	35	34	
						73				32	31	30	29	28	27	26	25		23	22	21	20		18	17
										16	15	14	13	12	11		9		7	6	5	4		2	1
SALEABLE	NOT APPLICABLE	34566-7643	9	B	ST GRY					68	67			64					59	58					
												46	45						39	38					
						73				32		30	29	28	27				23	22					17
																10			7						1
SALEABLE	TBD	34822-0143	0	A	BLACK				61	60	59	58		56	55				51		49	66			
												42													
						65				32															17
										16						10		8						2	
SALEABLE	NOT APPLICABLE	34566-7653	0	B	ST GRY	72		70								62	61						55		
						52				48	47	46			43			40							
						73						30								22	21	20	19	18	
										16	15	14								6		4		2	
SALEABLE	NOT APPLICABLE	34566-7663	0	B	ST GRY	72		70		68						62	61	60	59				55		
						52				48	47	46		44	43		41	40		38	37	36	35		33
						73						30								22	21	20	19	18	17
										16	15	14						8		6		4			1
SALEABLE	NOT APPLICABLE	34566-7673	0	C	BLUE		71	70	69		67	66	65	64			61	60	59	58	57			54	
						52	51	50	49	48	47	46	45	44			41		39	38	37			34	33
						73				32				28	27		25		23					18	17
										16	15	14	13	12	11	10	9	8	7						

molex

MX123 52/66/73/80-WAY RECEPTACLE ASSY SEALED PIN OUT SHEET

STATUS	GM PART #	HRNS CONN ASSY			TPA	GROMMET CAP																				
		MATERIAL/PART NUMBER	WIRE DRESS OPTION	KEY OPTION Fp	COLOR OPTION Fp	NUMBERS INDICATE CAVITIES OPEN FOR CIRCUITS Fp																				
SALEABLE	NOT APPLICABLE	34566-7683	9	B	ST GRY	72	71	70	69	68	67	66	65	64	63	62	61	60	59		57	56	55			
						52	51	50	49	48	47	46	45	44	43		41	40	39	38	37	36	35	34	33	
						73				32	31	30	29	28		26	25	24	23	22	21	20	19	18	17	
										16	15	14	13	12	11		9	8	7	6	5	4	3	2	1	
SALEABLE	NOT APPLICABLE	34566-7693	9	A	BLACK	72								64		62	61				57	56	55	54		
						52	51					46	45		43			40			37		35	34		
						73				32		30	29		27		25					20				
										16	15		13		11	10	9					4				
SALEABLE	NOT APPLICABLE	34566-7713	9	A	BLACK	72								64		62	61			58	57	56	55	54		
						52	51			48		46	45		43		41	40			37		35	34		
						73				32		30	29		27		25					20				
										16	15		13		11	10	9					4	3			
SALEABLE	NOT APPLICABLE	34566-7723	9	A	BLACK	72								64		62	61				57	56	55	54	53	
						52	51					46	45		43			40			37					
						73				32		30	29		27		25					20				
										16	15		13		11	10	9					4				
SALEABLE	NOT APPLICABLE	34566-7733	9	A	BLACK	72								64		62	61			58	57	56	55	54	53	
						52	51			48		46	45		43		41	40			37					
						73				32		30	29		27		25					20				
										16	15		13		11	10	9					4	3			
SALEABLE	NOT APPLICABLE	34566-7743	0	C	BLUE	72		70		68	67	66			63	62			59		57				53	
						52	51		49	48	47	46		44			41	40	39		37	36	35	34	33	
						73				32		30			27	26	25	24		22	21	20				
											15	14	13			10	9	8		6	5	4		2		
SALEABLE	NOT APPLICABLE	34566-7753	0	A	BLACK		71	70	69	68	67			64	63	62	61	60	59	58	57	56	55	54	53	
						52	51	50	49				45	44	43	42	41		39	38	37	36		34		
						73				32	31		29	28	27	26	25						19	18		
										16	15	14	13	12	11	10	9	8					3			
SALEABLE	NOT APPLICABLE	34566-7763	0	F	NATURAL																					
						73																				
SALEABLE	NOT APPLICABLE	34566-7773	0	B	ST GRY	72		70			67				63	62	61	60	59							
						52						46			43		41	40								
						73									27					22	21	20	19	18		
										16		14			11					6		4				
SALEABLE	TBD	34822-0153	9	A	BLACK		63	62	61	60	59					54	53		51		49	66				
							47									38	37		35		33					
						65								28			25			22	21	20	19	18	17	
											15	14	13					8	7				3	2	1	
SALEABLE	NOT APPLICABLE	34566-7783	0	A	BLACK	72	71	70	69	68		66	65	64	63			60			57	56		54		
						52	51	50	49	48		46	45	44	43	42	41	40	39	38	37	36		34		
						73				32	31	30	29	28		26	25		23	22	21					
											15	14	13	12			9		7	6	5			2	1	
SALEABLE	NOT APPLICABLE	34566-7793	0	A	BLACK	72		70			67	66	65		63			60	59	58	57	56	55			
						52	51		49	48	47	46	45		43	42		40	39	38	37	36	35			
						73								28	27				23	22	21			18	17	
														12	11		9							2	1	
SALEABLE	NOT APPLICABLE	34566-7813	0	A	BLACK			70	69	68	67				63	62	61	60	59	58	57	56	55	54	53	
						52	51	50	49					44	43	42	41	40	39	38	37	36		34		
						73				32			29	28	27	26	25				21		19	18		
										16	15	14	13	12	11	10	9	8			5		3			
SALEABLE	NOT APPLICABLE	34566-7823	0	B	ST GRY	72				68	67				63	62	61	60	59							
						52				48	47	46		44	43		41	40		38	37	36	35			
						73						30			27							20	19	18		
										16		14			11			8				4			1	
SALEABLE	NOT APPLICABLE	34566-7833	0	B	ST GRY	72	71	70	69	68	67	66	65	64	63		61	60	59		57	56	55			
						52	51	50	49	48	47	46	45	44	43		41	40	39	38	37	36	35	34	33	
						73				32	31	30	29	28		26	25	24	23	22	21	20	19	18	17	
										16	15	14	13	12				8	7	6	5	4	3	2	1	

MX123 52/66/73/80-WAY RECEPTACLE ASSY SEALED PIN OUT SHEET

STATUS	GM PART #	HRNS CONN ASSY			TPA	GROMMET CAP																			
		MATERIAL/PART NUMBER	WIRE DRESS OPTION	KEY OPTION Fp	COLOR OPTION Fp	NUMBERS INDICATE CAVITIES OPEN FOR CIRCUITS Fp																			
SALEABLE	NOT APPLICABLE	34566-7843	9	C	BLUE		71				67		65	64		62	61	60		58	57			54	
						52	51	50	49	48	47		45	44		42	41			38	37			34	33
						73								28	27	26	25							18	
										16	15	14	13	12	11	10	9								
SALEABLE	NOT APPLICABLE	34566-7853	9	C	BLUE	72	71	70	69		67	66		64										54	
						52	51	50	49		47	46		44					39	38					
						73						30	29	28	27	26	25	24	23	22	21				17
										16	15	14	13	12	11	10	9	8	7	6	5				
SALEABLE	NOT APPLICABLE	34566-7863	9	C	BLUE	72		70		68	67	66			63	62			59		57				53
						52	51			48	47	46		44				40	39		37	36	35	34	33
						73				32		30			27	26	25	24		22	21				
											15	14				10	9	8		6	5	4		2	
SALEABLE	NOT APPLICABLE	34566-7873	9	A	BLACK		71		69				65	64			61	60		58		56	55	54	
								50					45		43	42				38			35		
						73					31		29	28					23				19	18	17
										16				12	11								3		1
SALEABLE	NOT APPLICABLE	34566-7883	9	A	BLACK	72				68	67	66	65												
										48	47							40		38			35		33
						73					31	30					25	24	23	22	21	20	19		17
																	9	8	7	6	5	4		2	1
SALEABLE	NOT APPLICABLE	34566-7893	9	A	BLACK	72	71	70	69	68		66	65	64	63		61	60			57	56		54	53
						52	51	50	49	48		46	45	44	43	42		40	39	38	37	36		34	33
						73				32	31	30	29	28					23	22	21	20			
											15	14	13	12					7	6	5	4		2	
SALEABLE	TBD	34822-0163	0	A	BLACK	64	63									54	53		51		49	66			
																38	37		35		33				
						65								28					23		21	20	19	18	17
											15	14	13					8	7			4	3	2	1
SALEABLE	NOT APPLICABLE	34566-7913	9	G	BLUE	80	79	78			75				71	70			67						61
						60	59	58	57			54			51	50	49	48	47		45	44		42	41
						40	39		37	36		34	33	32		30	29	28	27		25	24	23	22	21
						20	19	18					13	12	11		9	8			5		3	2	1
SALEABLE	NOT APPLICABLE	34566-7923	0	C	BLUE		71	70			67			64			61	60			57			54	
						52	51	50	49	48	47		45	44			41				37			34	33
						73				32				28	27		25							18	17
										16	15	14	13	12	11	10	9	8	7						
SALEABLE	NOT APPLICABLE	34566-7933	0	A	BLACK	72	71	70	69	68		66	65	64	63		61	60			57	56		54	53
						52	51	50	49	48		46	45	44	43			40	39	38	37	36		34	33
						73				32	31	30	29	28					23	22	21	20			
											15	14	13	12					7	6	5	4		2	
SALEABLE	NOT APPLICABLE	34566-7943	0	B	ST GRY	72										62	61	60	59				55		
						52				48	47	46			43		41	40		38	37	36	35		
						73					31	30								22	21	20	19	18	17
										16	15	14								6		4			1
SALEABLE	NOT APPLICABLE	34566-7953	0	B	ST GRY	72										62	61	60	59				55		
						52				48	47	46			43		41	40		38	37	36	35		
						73					31	30								22	21	20	19	18	17
										16	15	14								6		4		2	
SALEABLE	NOT APPLICABLE	34566-7963	9	A	BLACK	72	71	70	69	68		66	65	64	63		61	60			57	56		54	53
						52	51	50	49	48		46	45	44	43	42		40	39	38	37	36		34	33
						73				32	31	30	29	28		26	25		23	22	21	20			
											15	14	13	12			9		7	6	5	4		2	
SALEABLE	NOT APPLICABLE	34566-7973	9	B	ST GRY	72										62	61	60	59				55		
						52		50	49	48	47	46	45		43		41	40		38	37	36	35	34	
						73						30	29							22	21	20	19	18	17
										16	15	14								6		4			1
SALEABLE	NOT APPLICABLE	34566-7983	9	B	ST GRY	72										62	61	60	59				55		
						52		50	49	48	47	46	45		43		41	40						34	33
						73						30	29							22	21	20	19	18	17
										16	15	14								6		4			

MX123 52/66/73/80-WAY RECEPTACLE ASSY SEALED PIN OUT SHEET

STATUS	GM PART #	HRNS CONN ASSY			TPA	GROMMET CAP																				
		MATERIAL/PART NUMBER	WIRE DRESS OPTION	KEY OPTION Fp	COLOR OPTION Fp	NUMBERS INDICATE CAVITIES OPEN FOR CIRCUITS Fp																				
SALEABLE	NOT APPLICABLE	34566-7993	9	C	BLUE			70	69		67	66		64			61	60			57			54	
						52	51	50	49	48	47	46	45	44			41				37			34	33
						73				32				28	27		25							18	17
										16	15	14	13	12	11	10	9	8	7						
SALEABLE	NOT APPLICABLE	34566-8013	9	C	BLUE		71				67		65	64			61	60	59		57			54	
						52	51	50		48	47		45	44			41		39		37			34	33
						73				32				28	27		25		23					18	
										16	15	14	13	12	11	10	9	8	7						
SALEABLE	TBD	34822-0173	9	A	BLACK	64						58	57	56	55	54		52		50		66				
						48		46	45	44	43	42	41	40				36		34						
						65				32	31	30	29		27	26		24	23							
										16				12	11	10	9			6	5	4				
SALEABLE	NOT APPLICABLE	34566-8023	9	C	BLUE	72			69	68					63	62			59			56	55		53
												46			43	42		40	39			36	35		
						73					31	30	29			26		24	23	22	21	20	19		
																		8	7	6	5	4	3	2	1
SALEABLE	NOT APPLICABLE	34566-8033	9	B	ST GRY		71	70	69		67	66	65	64	63					58	57	56		54	
							51	50	49				45			42			39					34	33
						73				32	31		29	28	27	26	25	24	23						
													13	12	11	10	9		7		5		3	2	
SALEABLE	NOT APPLICABLE	34566-8043	9	A	BLACK						67					62	61		59	58			55		53
											47					42							35		33
						73									27	26	25	24				20	19	18	17
										16					11	10	9	8				4	3		1
SALEABLE	NOT APPLICABLE	34566-8053	9	A	BLACK	72				68	67	66							59						
												46						40		38			35		33
						73					31						25		23	22	21	20	19		17
																	9	8	7	6	5	4		2	1
SALEABLE	NOT APPLICABLE	34566-8063	9	C	BLUE		71		69				65	64			61	60		58		56	55	54	
								50					45		43	42				38			35		
						73					31		29	28					23				19	18	17
										16				12	11				7				3		1
SALEABLE	NOT APPLICABLE	34566-8073	9	B	ST GRY				69				65	64	63										
									49				45	44	43										
						73													23	22	21	20	19		
														12	11		9		7	6	5	4			
SALEABLE	NOT APPLICABLE	34566-8083	9	B	ST GRY											62			59	58				54	53
																42			39						
						73									27										
																10	9								
SALEABLE	NOT APPLICABLE	34566-8093	9	A	BLACK		71		69	68		66	65	64		62	61							54	53
								50	49				45	44			41							34	33
						73				32	31	30	29			26	25	24	23			20	19		
										16	15	14	13			10		8		6		4	3		
SALEABLE	NOT APPLICABLE	34566-8113	9	C	BLUE					68					63	62	61	60	59	58	57		55		53
										48					43	42	41	40			37	36	35		33
						73				32					27			24				20	19	18	
															11	10		8			5	4	3	2	1
SALEABLE	NOT APPLICABLE	34566-8123	0	G	BLUE	80	79						73	72		70	69	68	67	66	65	64		62	61
							59						53	52						46		44		42	41
										36	35	34									25	24	23	22	21
							19			16	15	14													
SALEABLE	NOT APPLICABLE	34566-8133	0	G	BLUE	80	79	78	77		75			72	71	70	69	68		66					
						60	59	58	57	56	55		53		51	50	49	48	47	46	45	44			
						40	39		37	36	35	34		32	31	30	29	28		26		24	23	22	21
							19	18	17						11							4	3		1
SALEABLE	NOT APPLICABLE	34566-8143	0	G	BLUE	80	79	78	77	76	75	74	73	72		70	69	68	67	66	65	64	63	62	61
						60	59	58	57	56	55	54	53	52	51	50		48	47	46	45	44	43	42	41
						40	39	38	37	36	35	34	33	32	31	30	29	28	27	26	25	24	23	22	21
						20	19	18	17	16	15	14	13	12	11	10	9	8	7	6	5	4	3	2	1

molex

MX123 52/66/73/80-WAY RECEPTACLE ASSY SEALED PIN OUT SHEET

STATUS	GM PART #	HRNS CONN ASSY			TPA	GROMMET CAP																				
		MATERIAL/PART NUMBER	WIRE DRESS OPTION	KEY OPTION Fp	COLOR OPTION Fp	NUMBERS INDICATE CAVITIES OPEN FOR CIRCUITS Fp																				
SALEABLE	NOT APPLICABLE	34566-8153	0	C	BLUE	72	71	70	69	68	67	66	65	64	63	62	61	60	59	58	57	56	55		
						52	51	50								42	41						35	34	33
						73								28	27									18	
										16		14	13										3		
SALEABLE	NOT APPLICABLE	34566-8163	9	B	ST GRY					68	67			64	63				59	58			55	54	
											47	46	45	44	43				39	38			35		
						73				32	31	30	29	28	27				23	22			19		17
											15		13	12	11	10	9			6		4			1
SALEABLE	NOT APPLICABLE	34566-8173	0	B	ST GRY	72		70		68	67				63	62	61	60	59						
						52						46			43		41	40							
						73									27					22	21	20	19	18	
										16		14			11			8		6		4			
SALEABLE	NOT APPLICABLE	34566-8183	9	H	ST GRY										71										
																	49								
SALEABLE	NOT APPLICABLE	34566-8193	0	G	BLUE		79	78	77	76	75	74			71				67		65		63		
						60	59	58	57	56	55	54		52					47		45		43		
						40		38	37				33	32	31	30	29		27	26					
						20		18	17						11	10	9	8	7	6	5	4	3	2	1
SALEABLE	NOT APPLICABLE	34566-8213	0	H	ST GRY							74	73						67		65	64	63	62	61
													53	52								44	43	42	41
								38					33						27		25				
						20				16	15	14	13	12		10	9	8		6	5			2	
SALEABLE	NOT APPLICABLE	34566-8223	9	A	BLACK	72										62	61		59		57		55		
						52	51											40			37				
						73				32			29				25					20			
										16	15	14		12	11	10	9								
SALEABLE	NOT APPLICABLE	34566-8233	9	G	BLUE				77	76	75	74	73	72		70	69	68		66	65	64	63	62	61
										56	55		53	52						46	45		43	42	
								38	37	36	35	34			31					26			23	22	21
						20	19		17	16	15	14	13			10			7	6		4			1
SALEABLE	NOT APPLICABLE	34566-8243	9	G	BLUE				77		75	74	73	72		70	69	68		66	65	64	63	62	61
										56	55		53	52						46	45		43	42	
								38		36	35	34			31					26			23	22	21
						20	19		17	16	15	14	13			10			7	6		4			1
SALEABLE	NOT APPLICABLE	34566-8253	9	G	BLUE				77	76	75	74	73	72		70	69	68		66	65	64	63	62	61
										56	55		53	52						46	45		43	42	
								38	37	36	35	34			31					26			23	22	21
									17	16	15	14	13			10			7	6		4			1
SALEABLE	NOT APPLICABLE	34566-8263	9	G	BLUE				77		75	74	73	72		70	69	68		66	65	64	63	62	61
										56	55		53	52						46	45		43	42	
								38		36	35	34			31					26			23	22	21
									17	16	15	14	13			10			7	6		4			1
SALEABLE	NOT APPLICABLE	34566-8273	9	G	BLUE	80	79	78							71				67						
						60	59	58	57			54			51	50	49	48	47			44			41
						40	39						33	32		30	29	28	27		25	24			
								18						12	11		9	8			5		3	2	
SALEABLE	NOT APPLICABLE	34566-8283	9	G	BLUE	80	79	78		76					71				67						
						60	59	58	57			54			51	50	49	48	47			44			41
						40	39		37				33	32		30	29	28	27		25	24			
								18						12	11		9	8			5		3	2	
SALEABLE	NOT APPLICABLE	34566-8293	9	A	BLACK		71	70	69	68	67	66	65		63			60	59	58					
								50	49	48	47			44		42			39	38		36	35	34	33
						73					31			28		26		24	23	22	21		19	18	17
												14		12				8	7	6	5		3	2	1
SALEABLE	NOT APPLICABLE	34566-8313	9	A	BLACK		71	70	69		67	66	65		63			60	59	58					
								50	49	48	47			44		42	41		39	38		36	35	34	33
						73					31			28		26		24	23	22	21		19	18	17
														12				8	7	6			3	2	1

MX123 52/66/73/80-WAY RECEPTACLE ASSY SEALED PIN OUT SHEET

STATUS	GM PART #	HRNS CONN ASSY			TPA	GROMMET CAP																			
		MATERIAL/PART NUMBER	WIRE DRESS OPTION	KEY OPTION Fp	COLOR OPTION Fp	NUMBERS INDICATE CAVITIES OPEN FOR CIRCUITS Fp																			
SALEABLE	NOT APPLICABLE	34566-8323	9	A	BLACK		71	70	69	68	67	66	65		63			60							53
								50	49		47			44		42			39	38		36			33
						73					31			28		26		24	23	22	21		19	18	17
												14		12				8	7	6	5			2	1
SALEABLE	NOT APPLICABLE	34566-8333	9	A	BLACK		71	70	69	68	67	66	65		63			60		58					53
								50	49	48	47			44		42	41		39	38		36			33
						73					31			28		26		24	23	22	21		19	18	17
												14		12				8	7	6	5		3	2	1
SALEABLE	NOT APPLICABLE	34566-8343	9	A	BLACK		71	70	69	68	67	66	65		63			60	59						
								50	49		47			44		42			39	38		36	35	34	33
						73					31			28		26		24	23	22	21		19	18	17
												14		12				8	7	6	5			2	1
SALEABLE	NOT APPLICABLE	34566-8353	9	A	BLACK	72								64		62	61				57	56	55	54	53
						52	51					46	45		43		41	40			37				
						73				32		30	29		27		25					20			
										16	15		13		11	10	9					4			
SALEABLE	NOT APPLICABLE	34566-8363	9	A	BLACK	72				68				64		62	61				57	56	55	54	53
						52	51					46	45		43			40			37				
						73				32		30	29		27		25					20			
										16	15	14	13		11	10	9				5	4			
SALEABLE	NOT APPLICABLE	34566-8373	9	A	BLACK	72								64		62	61		59	58	57	56	55	54	
						52	51			48		46	45		43		41	40			37		35	34	
						73				32		30	29		27		25					20			
										16	15		13		11	10	9					4	3		
SALEABLE	NOT APPLICABLE	34566-8383	9	A	BLACK	72								64		62	61		59		57	56	55	54	
						52	51					46	45		43			40			37		35	34	
						73				32		30	29		27		25					20			
										16	15		13		11	10	9					4			
SALEABLE	NOT APPLICABLE	34566-8393	0	A	BLACK	72		70							63	62						56	55	54	53
						52	51		49	48					43							36	35	34	33
						73					31	30	29	28	27			24	23	22	21	20	19	18	17
										16	15	14	13	12		10	9	8	7	6			3	2	1
SALEABLE	NOT APPLICABLE	34566-8413	0	A	BLACK	72		70							63	62						56	55	54	53
						52	51		49	48					43							36	35	34	33
						73					31	30	29	28	27			24	23	22	21	20	19	18	17
										16	15	14		12		10	9	8	7	6			3	2	1
SALEABLE	NOT APPLICABLE	34566-8423	0	C	BLUE				69		67			64		62	61	60			57			54	
						52	51	50	49	48		46	45	44		42	41				37			34	33
						73								28	27	26	25								
										16	15	14	13	12	11	10	9	8	7						
SALEABLE	NOT APPLICABLE	34566-8433	0	H	ST GRY		79	78	77	76	75	74	73				69								61
						20											9				5				1
SALEABLE	NOT APPLICABLE	34566-8443	0	C	BLUE		71	70			67	66	65	64			61	60	59	58	57			54	
						52	51	50		48	47		45	44			41		39	38	37			34	33
						73				32				28	27		25		23					18	17
										16	15	14	13	12	11	10	9	8	7	6	5				
SALEABLE	NOT APPLICABLE	34566-8453	0	A	BLACK	72	71	70	69	68		66	65	64	63			60			57	56		54	
						52	51	50	49	48		46	45	44	43	42		40	39	38	37	36		34	
						73				32	31	30	29	28					23	22	21	20			
											15	14	13	12					7	6	5	4		2	
SALEABLE	NOT APPLICABLE	34566-8463	0	B	ST GRY	72		70		68						62	61	60	59				55		
						52				48	47	46		44	43		41	40		38	37	36	35		
						73						30								22	21	20	19	18	
										16	15	14						8		6		4			1
SALEABLE	NOT APPLICABLE	34566-8473	0	C	BLUE		71	70			67	66	65	64		62	61	60		58	57		55	54	
						52	51	50	49	48	47		45	44		42	41			38	37		35	34	33
						73				32				28	27	26	25						19	18	17
										16	15	14	13	12	11	10	9	8	7	6	5				

molex

MX123 52/66/73/80-WAY RECEPTACLE ASSY SEALED PIN OUT SHEET

STATUS	GM PART #	HRNS CONN ASSY			TPA	GROMMET CAP																			
		MATERIAL/PART NUMBER	WIRE DRESS OPTION	KEY OPTION Fp	COLOR OPTION Fp	NUMBERS INDICATE CAVITIES OPEN FOR CIRCUITS Fp																			
SALEABLE	NOT APPLICABLE	34566-8483	0	A	BLACK	72	71	70	69	68		66	65	64	63		61	60			57	56		54	53
						52	51	50	49	48		46	45	44	43	42		40	39	38	37	36		34	33
						73				32	31	30	29	28					23	22	21	20			
											15	14	13	12					7	6	5	4		2	
SALEABLE	NOT APPLICABLE	34566-8493	0	B	ST GRY	72		70		68	67					62	61	60	59				55		
						52				48	47	46		44	43			40							33
						73						30								22	21	20	19	18	17
										16	15	14						8		6		4			
SALEABLE	NOT APPLICABLE	34566-8513	9	A	BLACK	72	71	70	69	68		66	65	64	63		61	60			57	56		54	53
						52	51	50	49	48		46	45	44	43			40	39	38	37	36		34	33
						73				32	31	30	29	28				24	23	22					
											15	14	13	12					7	6	5			2	
SALEABLE	NOT APPLICABLE	34566-8523	9	B	ST GRY	72		70		68						62	61						55		
						52				48	47	46			43			40							
						73						30								22	21	20	19	18	17
										16	15	14						8		6		4		2	
SALEABLE	NOT APPLICABLE	34566-8533	9	C	BLUE			70			67	66	65	64			61	60			57			54	
						52	51	50	49	48	47		45	44			41				37			34	33
						73				32				28	27		25							18	17
										16	15	14	13	12	11	10									
SALEABLE	NOT APPLICABLE	34566-8543	9	C	BLUE		71		69		67	66	65	64				60			57			54	
						52	51	50	49	48	47	46	45	44							37			34	33
						73				32				28	27										
										16	15	14	13	12	11	10	9	8	7						
SALEABLE	NOT APPLICABLE	34566-8553	0	B	ST GRY	72				68						62	61	60	59				55		
						52						46			43		41	40							
						73														22	21	20			
										16	15	14						8		6		4			
SALEABLE	NOT APPLICABLE	34566-8563	0	A	BLACK	72		70			67				63			60	59	58	57	56	55		
						52	51			48	47	46			43	42		40	39	38	37	36	35		
						73								28						22	21			18	17
														12	11		9		7					2	1
SALEABLE	NOT APPLICABLE	34566-8573	0	B	ST GRY	72	71	70	69	68	67	66	65	64	63		61	60	59		57	56	55		
						52	51	50	49	48	47	46	45	44	43		41	40	39	38	37	36	35		33
						73				32	31	30	29	28		26		24	23	22	21	20	19		
										16	15	14	13	12			9	8	7	6	5	4	3		
SALEABLE	NOT APPLICABLE	34566-8583	0	C	BLUE	72	71	70	69		67	66	65	64				60				56		54	
						52	51	50	49		47	46	45	44				40	39	38				34	
						73					31	30		28		26	25	24	23	22	21				17
										16	15	14	13	12			9	8	7	6	5				
SALEABLE	NOT APPLICABLE	34566-8593	0	B	ST GRY	72				68						62	61	60	59				55		
						52				48	47	46			43		41	40		38	37	36	35		
						73						30								22	21	20	19	18	
										16	15	14						8		6		4			1
SALEABLE	TBD	34822-0183	0	A	BLACK	64	63	62	61	60	59					54	53		51		49	66			
																38	37		35		33				
						65												24	23	22	21	20	19	18	17
											15	14	13					8	7			4	3	2	1
SALEABLE	TBD	34822-0193	0	A	BLACK	64	63									54	53		51		49	66			
																38	37		35		33				
						65								28				24	23		21	20	19	18	17
											15	14	13					8	7			4	3	2	1
SALEABLE	TBD	34822-0203	0	A	BLACK	64	63	62	61	60	59					54	53		51		49	66			
																38	37		35		33				
						65					31			28				24	23	22	21	20	19	18	17
											15	14	13					8	7			4		2	1
SALEABLE	TBD	34822-0213	0	A	BLACK	64	63	62	61	60	59					54	53		51		49	66			
																38	37		35		33				
						65					31							24	23	22	21	20	19	18	17
											15	14	13					8	7			4	3	2	1

MX123 52/66/73/80-WAY RECEPTACLE ASSY SEALED PIN OUT SHEET

STATUS	GM PART #	HRNS CONN ASSY			TPA	GROMMET CAP																				
		MATERIAL/PART NUMBER	WIRE DRESS OPTION	KEY OPTION Fp	COLOR OPTION Fp	NUMBERS INDICATE CAVITIES OPEN FOR CIRCUITS Fp																				
SALEABLE	NOT APPLICABLE	34566-8613	0	C	BLUE		71	70			67	66	65	64			61	60	59	58	57			54	
						52	51	50		48	47		45	44			41		39	38	37			34	33
						73				32				28	27		25		23					18	17
										16	15	14	13	12	11	10	9	8	7						
SALEABLE	NOT APPLICABLE	34566-8623	9	C	BLUE					68			65		63	62	61		59	58	57	56	55		53
										48			45		43	42	41				37	36	35	34	33
						73				32	31											20	19	18	
																						4	3	2	1
SALEABLE	NOT APPLICABLE	34566-8633	0	B	ST GRY	72										62	61								
						52				48	47	46			43			40							
						73						30								22	21	20	19	18	17
										16	15	14								6		4			
SALEABLE	NOT APPLICABLE	34566-8643	0	C	BLUE		71	70			67	66		64			61	60			57			54	
						52	51	50	49	48			45	44			41				37			34	33
						73				32				28	27		25							18	17
										16	15	14	13	12	11	10	9	8	7						
SALEABLE	NOT APPLICABLE	34566-8653	9	C	BLUE		71		69		67	66	65	64	63		61	60			57				
						52	51	50		48	47	46	45		43		41				37			34	33
						73								28	27		25								
										16	15	14	13	12	11	10	9	8	7						
SALEABLE	NOT APPLICABLE	34566-8663	0	B	ST GRY	72	71	70	69					64	63		61	60		58	57	56	55		
						52	51	50	49						43					38	37	36			33
						73				32		30	29	28		26	25	24	23	22	21	20			
										16	15	14	13	12	11	10	9	8	7	6	5	4			
SALEABLE	NOT APPLICABLE	34822-0223	0	A	BLACK	64	63	62	61	60	59					54	53		51		49	66			
																38	37		35		33				
						65					31			28				24	23	22	21	20	19	18	17
											15	14	13					8	7			4	3	2	1
SALEABLE	NOT APPLICABLE	34566-8673	0	F	NATURAL	72		70		68	67	66			63	62			59		57				53
						52	51		49	48	47	46		44			41	40	39		37	36	35	34	33
		73								32		30			27	26	25	24		22	21	20			
							15	14	13							10	9	8		6	5	4		2	
SALEABLE	NOT APPLICABLE	34566-8683	0	B	ST GRY	72		70		68	67	66			63	62			59		57				53
						52	51		49	48	47	46		44			41	40	39		37	36	35	34	33
		73								32		30			27	26	25	24		22	21	20			
							15	14	13							10	9	8		6	5	4		2	
SALEABLE	NOT APPLICABLE	34566-8693	0	A	BLACK	72		70		68	67	66			63	62			59		57				53
						52	51		49	48	47	46		44			41	40	39		37	36	35	34	33
		73								32		30			27	26	25	24		22	21	20			
							15	14	13							10	9	8		6	5	4		2	
SALEABLE	NOT APPLICABLE	34566-8713	9	B	ST GRY	72	71	70	69					64	63		61	60		58	57	56	55		
						52	51	50	49						43					38	37	36			33
		73								32		30	29	28		26	25	24	23	22	21	20			
										16	15	14	13	12	11	10	9	8	7	6	5	4			
SALEABLE	NOT APPLICABLE	34566-8723	0	C	BLUE		71	70				66		64			61	60			57			54	
						52	51	50	49	48			45	44			41				37			34	33
		73								32				28	27		25							18	17
										16	15	14	13	12	11	10	9	8	7						
SALEABLE	NOT APPLICABLE	34566-8733	0	A	BLACK	72	71	70	69	68		66	65	64	63			60			57	56		54	
						52	51	50	49	48		46	45	44	43	42		40	39	38	37	36		34	
		73								32	31	30	29	28					23	22	21	20			
							15	14	13	12									7	6	5	4	3	2	
SALEABLE	NOT APPLICABLE	34566-8743	0	C	BLUE	72	71	70	69		67	66		64										54	
						52	51	50	49		47	46		44					39	38					
		73										30	29	28	27	26	25	24	23	22	21				17
						16	15	14	13	12	11	10	9	8	7	6	5								
SALEABLE	NOT APPLICABLE	34566-8753	0	B	ST GRY	72	71	70	69	68	67	66	65	64	63		61	60		58	57	56	55	54	53
						52	51	50	49	48	47	46	45	44	43			40			37	36	35	34	33
		73								32		30	29	28		26	25	24			21		19		
						16		14	13	12	11	10	9	8		6	5							2	1

molex

MX123 52/66/73/80-WAY RECEPTACLE ASSY SEALED PIN OUT SHEET

STATUS	GM PART #	HRNS CONN ASSY			TPA	GROMMET CAP																			
		MATERIAL/PART NUMBER	WIRE DRESS OPTION	KEY OPTION Fp	COLOR OPTION Fp	NUMBERS INDICATE CAVITIES OPEN FOR CIRCUITS Fp																			
SALEABLE	NOT APPLICABLE	34566-8763	0	A	BLACK	72	71	70			67	66							59	58	57	56	55	54	53
						52	51	50			47	46							39		37	36	35		33
						73				32	31	30	29	28	27	26					21			18	17
										16	15	14	13	12	11	10		8	7				3	2	1
SALEABLE	12672857	34822-0243	9	A	BLACK	64	63	62	61	60	59					54	53		51		49	66			
							47									38	37		35		33				
						65								28			25	24		22	21	20	19	18	17
											15	14	13	12				8	7			4	3	2	1
SALEABLE	NOT APPLICABLE	34822-0253	0	A	BLACK		63	62	61	60	59					54	53		51		49	66			
																38	37		35		33				
						65					31			28				24	23	22	21	20	19	18	17
											15	14	13					8	7			4	3	2	1
SALEABLE	NOT APPLICABLE	34822-0263	9	C	BLUE	64	63	62		60	59		57	56	55	54	53	52	51	50	49	66			
						48	47	46	45			42			39		37	36	35	34	33				
						65				32		30	29	28	27	26	25	24	23	22	21		19	18	17
										16	15	14	13	12	11	10	9	8	7	6			3	2	1
SALEABLE	NOT APPLICABLE	34822-0273	9	A	BLACK	64	63									54	53		51		49	66			
							47									38	37		35		33				
						65								28						22		20	19	18	17
											15	14	13	12				8	7			4	3	2	1
SALEABLE	NOT APPLICABLE	34822-0283	0	A	BLACK				61	60	59	58		56	55				51		49	66			
												42													
						65				32															17
										16								8						2	
SALEABLE	NOT APPLICABLE	34822-0293	0	A	BLACK	64	63									54	53		51		49	66			
							47									38	37		35		33				
						65								28						22		20	19	18	17
											15	14	13	12				8	7			4	3	2	1
SALEABLE	NOT APPLICABLE	34566-8773	9	B	ST GRY	72		70		68						62	61	60	59				55		
						52				48	47	46			43			40							
						73						30								22	21	20	19	18	17
										16	15	14						8		6		4		2	
SALEABLE	NOT APPLICABLE	34566-8783	9	A	BLACK	72	71	70	69	68		66	65	64	63		61	60			57	56		54	53
						52	51	50	49	48		46	45	44	43			40	39	38	37	36		34	33
						73				32	31	30	29	28					23	22	21				
											15	14	13	12					7	6	5			2	
SALEABLE	NOT APPLICABLE	34566-8793	9	C	BLUE		71	70			67	66	65				61	60			57			54	
						52	51	50	49	48	47		45	44			41				37			34	33
						73				32				28	27		25							18	17
										16	15	14	13	12	11	10	9	8	7						
SALEABLE	NOT APPLICABLE	34566-8813	9	B	ST GRY	72	71	70	69	68	67		65	64	63		61	60	59		57	56	55	54	53
						52	51	50	49	48	47	46	45	44	43	42		40	39			36	35	34	33
						73				32	31	30	29	28	27	26	25	24	23	22	21				
										16	15	14	13	12	11	10	9	8	7	6		4	3	2	
SALEABLE	NOT APPLICABLE	34566-8823	9	C	BLUE	72	71	70	69		67	66		64				60						54	
						52	51	50	49		47	46		44				40	39						
						73						30	29	28	27	26	25	24	23	22	21				17
										16	15	14	13	12	11	10	9	8	7	6	5				
SALEABLE	NOT APPLICABLE	34566-8833	9	C	BLUE	72		70		68	67	66			63	62			59		57			54	53
						52	51		49	48	47	46		44			41	40	39		37	36	35	34	33
						73				32		30			27	26	25	24		22	21	20			17
											15	14	13			10	9	8	7	6	5	4		2	1
SALEABLE	NOT APPLICABLE	34566-8843	0	C	BLUE	72	71	70	69		67	66		64										54	
						52	51	50	49		47	46		44			41		39	38					
						73						30	29	28	27	26	25	24	23	22	21				17
										16	15	14	13	12	11	10	9	8	7	6	5				
SALEABLE	NOT APPLICABLE	34566-8853	0	B	ST GRY	72				68	67				63	62	61	60	59				55		
						52				48	47	46		44	43		41	40		38	37	36	35		
						73						30			27					22	21	20	19	18	
										16		14			11			8		6		4			1

molex

MX123 52/66/73/80-WAY RECEPTACLE ASSY SEALED PIN OUT SHEET

STATUS	GM PART #	HRNS CONN ASSY			TPA	GROMMET CAP																				
		MATERIAL/PART NUMBER	WIRE DRESS OPTION	KEY OPTION Fp	COLOR OPTION Fp	NUMBERS INDICATE CAVITIES OPEN FOR CIRCUITS Fp																				
SALEABLE	NOT APPLICABLE	34566-8863	0	B	ST GRY	72	71	70	69					64	63		61			58	57	56	55		
						52	51	50	49						43					38	37	36			33
						73				32		30	29	28		26	25	24	23	22	21	20			
										16		14	13	12	11	10	9	8	7	6	5	4			
SALEABLE	NOT APPLICABLE	34566-8873	0	B	ST GRY	72	71	70	69					64	63		61			58	57	56	55		
						52	51	50	49						43					38	37	36			33
						73				32	31	30	29	28		26	25	24	23	22	21	20			
										16	15	14	13	12	11	10	9	8	7	6	5	4			
SALEABLE	NOT APPLICABLE	34566-8883	0	B	ST GRY	72	71	70	69	68	67	66	65	64	63		61	60	59	58	57	56	55		
						52	51	50	49	48	47	46	45	44	43		41	40	39	38	37	36	35	34	33
						73				32	31	30	29	28	27	26	25	24	23	22	21	20	19	18	17
										16	15	14	13	12	11	10	9	8	7	6	5	4	3	2	1
SALEABLE	NOT APPLICABLE	34566-8893	0	A	BLACK	72		70			67	66	65		63			60	59	58	57	56	55		
						52	51		49	48	47	46	45		43	42		40	39	38	37	36	35		
						73								28	27				23	22	21			18	17
														12	11		9		7					2	1
SALEABLE	NOT APPLICABLE	34566-8913	0	A	BLACK	72	71	70	69	68		66	65	64	63			60			57	56		54	
						52	51	50	49	48		46	45	44	43	42	41	40	39	38	37	36		34	
						73				32	31	30	29	28					23	22	21				
											15	14	13	12					7	6	5			2	1
SALEABLE	NOT APPLICABLE	34566-8923	0	A	BLACK		71	70	69	68	67			64	63	62	61	60	59		57	56	55	54	53
						52	51	50	49			46	45	44	43	42	41	40	39	38	37	36		34	
						73				32			29	28	27	26	25				21			18	
										16	15	14	13	12	11	10	9	8			5		3		
SALEABLE	NOT APPLICABLE	34566-8933	0	C	BLUE	72	71		69	68		66	65		63				59	58		56			53
															43				39	38		36			
						73					31	30	29					24	23	22	21	20			
																				6	5	4	3	2	1
SALEABLE	NOT APPLICABLE	34566-8943	0	B	ST GRY	72				68						62	61						55		
						52						46			43			40							
						73														22	21	20	19	18	17
										16	15	14						8		6		4	3	2	
SALEABLE	NOT APPLICABLE	34566-8953	9	C	BLUE	72	71	70	69		67	66		64				60						54	
						52	51	50	49		47	46		44				40	39	38					
						73						30	29	28	27	26	25	24	23	22	21				17
										16	15	14	13	12	11	10	9	8	7	6	5				
SALEABLE	NOT APPLICABLE	34566-8963	0	B	ST GRY	72										62	61	60	59				55		
						52				48	47	46			43		41	40		38	37	36	35		
						73						30								22	21	20	19	18	17
										16	15	14								6		4			1
SALEABLE	NOT APPLICABLE	34566-8973	0	A	BLACK	72	71	70	69	68		66	65	64	63			60			57	56		54	
						52	51	50	49	48		46	45	44	43	42		40	39	38	37	36		34	
						73				32	31	30	29	28					23	22	21				17
											15	14	13	12					7	6	5			2	
SALEABLE	NOT APPLICABLE	34566-8983	0	C	BLUE		71	70			67	66		64			61	60			57			54	
						52	51	50	49	48	47		45	44			41				37			34	33
						73				32				28	27		25							18	17
										16	15	14	13	12	11	10	9	8	7						
SALEABLE	NOT APPLICABLE	34822-0303	0	A	BLACK																	66			
						65																			
SALEABLE	NOT APPLICABLE	34822-0313	0	A	BLACK		63	62	61	60	59					54	53				49	66			
																38	37		35		33				
						65					31			28				24	23	22	21	20	19	18	17
										16	15	14	13					8	7			4	3	2	1
SALEABLE	NOT APPLICABLE	34566-8993	0	B	ST GRY							66				62				58					
																	41			38	37				
						73																	19	18	17
																					5				1

MX123 52/66/73/80-WAY RECEPTACLE ASSY SEALED PIN OUT SHEET

STATUS	GM PART #	HRNS CONN ASSY			TPA	GROMMET CAP																			
		MATERIAL/PART NUMBER	WIRE DRESS OPTION	KEY OPTION Fp	COLOR OPTION Fp	NUMBERS INDICATE CAVITIES OPEN FOR CIRCUITS Fp																			
SALEABLE	NOT APPLICABLE	34566-9013	0	A	BLACK				69	68			65	64	63	62	61	60							
									49	48			45	44	43	42	41	40		38				34	
						73											25	24	23	22		20	19		
																	9			6	5	4			
SALEABLE	NOT APPLICABLE	34566-9023	0	B	ST GRY											62			59						
																42	41		39	38					
						73					31				27				23	22		20		18	17
											15								7			4	3		
SALEABLE	NOT APPLICABLE	34822-0323	9	A	BLACK			62	61	60	59	58	57	56	55			52		50		66			
		48	47	46	45	44	43	42	41	40	39							36		34					
		65				32	31	30	29		27	26	25			23				21					
											11	10	9							6	5				
SALEABLE	NOT APPLICABLE	34566-9033	0	C	BLUE	72		70			67				63			60	59	58	57	56	55		
		52	51	50	49		47	46	45	44									39	38				34	
		73					31	30	29	28		26	25	24	23	22	21								17
						16	15	14	13	12			9	8	7	6	5								
SALEABLE	NOT APPLICABLE	34566-9043	0	C	BLUE	72	71	70	69		67	66	65	64										54	
		52	51	50	49		47	46	45	44									39	38					
		73						30	29	28		26	25	24	23	22	21								17
						16	15	14	13	12			9	8	7	6	5								
SALEABLE	NOT APPLICABLE	34566-9053	0	C	BLUE	72	71	70	69	68		66	65	64			61	60			57	56		54	53
		52	51	50	49	48		46	45	44	43	42		40	39	38	37	36		34	33
		73					31	30	29	28					23	22	21	20			
							15	14	13	12					7	6	5	4		2	
SALEABLE	NOT APPLICABLE	34566-9063	0	B	ST GRY	72				68						62	61	60	59				55		
		52						46		44	43		41	40										
		73																		22	21	20	19	18	17
						16	15	14						8		6		4			
SALEABLE	NOT APPLICABLE	34566-9073	0	B	ST GRY	72	71	70	69	68	67	66	65	64	63		61	60	59		57	56	55		
		52	51	50	49	48	47	46	45	44	43		41	40	39	38	37	36	35	34	33
		73				32	31	30	29	28		26		24	23	22	21	20	19	18	17
						16	15	14	13	12			9	8	7	6	5	4	3	2	1
SALEABLE	NOT APPLICABLE	34566-9083	0	A	BLACK	72		70			67				63			60	59	58	57	56	55		
		52	51			48	47	46			43	42		40	39	38	37	36	35		
		73								28	27					22	21			18	17
										12	11		9		7					2	1
SALEABLE	NOT APPLICABLE	34566-9093	0	A	BLACK	72		70			67				63			60	59	58	57	56	55		
		52	51			48	47	46			43	42		40	39	38	37	36	35		
		73								28	27					22	21			18	17
										12	11		9							2	1
SALEABLE	NOT APPLICABLE	34566-9113	0	A	BLACK	72	71	70	69	68		66	65	64			61	60			57	56		54	53
		52	51	50	49	48		46	45	44	43	42		40	39	38	37	36		34	33
		73					31	30	29	28					23	22	21	20			
							15	14	13	12		10			7	6	5	4		2	
SALEABLE	NOT APPLICABLE	34566-9123	0	G	BLUE			78	77	76	75	74		72		70						64	63		
		60		58	57	56	55	54		52	51	50	49		47		45								
		40	39	38	37				33	32	31				27	26									
		20	19	18	17							10	9	8		6		4	3	2	1
SALEABLE	NOT APPLICABLE	34822-0333	0	A	BLACK							58	57	56	55			52		50		66			
		48		46	45	44	43	42	41	40	39				36			34							
		65				32	31	30	29		27	26				23									
						16					11	10	9				6	5							
SALEABLE	NOT APPLICABLE	34822-0343	0	A	BLACK				61			58										66			
						44	43		41	40		38													
		65					31																		
																				5	4				
SALEABLE	NOT APPLICABLE	34822-0353	0	A	BLACK	64						58	57	56	55			52		50		66			
		48	47	46	45	44	43	42	41	40	39				36			34							
		65				32		30	29		27	26													
						16				12	11	10	9			6	5								

MX123 52/66/73/80-WAY RECEPTACLE ASSY SEALED PIN OUT SHEET

STATUS	GM PART #	HRNS CONN ASSY			TPA	GROMMET CAP																			
		MATERIAL/PART NUMBER	WIRE DRESS OPTION	KEY OPTION Fp	COLOR OPTION Fp	NUMBERS INDICATE CAVITIES OPEN FOR CIRCUITS Fp																			
SALEABLE	NOT APPLICABLE	34566-9143	9	F	NATURAL	72	71	70			67	66	65	64	63	62	61	60	59			56	55	54	53
						52	51	50	49	48	47	46	45	44			41	40	39			36	35	34	
						73				32	31		29	28	27	26	25	24	23	22	21	20			
										16	15	14	13	12	11	10	9	8	7	6	5	4			
SALEABLE	NOT APPLICABLE	34566-9153	9	B	ST GRY							66				62				58					
																	41			38	37				
						73																20	19	18	17
																		8			5				1
SALEABLE	NOT APPLICABLE	34566-9163	9	B	ST GRY					68	67	66	65			62		60	59					54	53
										48	47	46	45	44		42	41	40	39				35	34	
						73					31				27								19	18	17
											15												3	2	1
SALEABLE	NOT APPLICABLE	34566-9173	0	B	ST GRY								65			62				58					
																	41			38	37				
						73																	19	18	17
																					5				1
SALEABLE	NOT APPLICABLE	34822-0363	9	C	BLUE				61			58										66			
										44	43		41	40		38									
						65					31											20			
																					5	4			
SALEABLE	NOT APPLICABLE	34822-0373	9	A	BLACK	64	63	62	61	60					55			52	51		49	66			
						48	47	46	45							38									
						65				32		30	29		27					22	21	20	19	18	17
														12	11	10					5	4	3	2	1
SALEABLE	NOT APPLICABLE	34822-0383	9	A	BLACK	64	63	62	61	60			57					52	51		49	66			
						48	47	46	45					40											
						65				32		30	29		27					22	21	20	19	18	17
														12	11	10					5	4	3	2	1
SALEABLE	NOT APPLICABLE	34822-0393	0	A	BLACK	64	63	62	61	60			57					52	51		49	66			
						48	47	46	45							38									
						65				32		30	29		27					22	21	20	19	18	17
														12	11	10					5	4	3	2	1
SALEABLE	NOT APPLICABLE	34822-0403	9	A	BLACK	64	63									54	53		51		49	66			
																38	37		35		33				
						65					31			28						22		20	19	18	17
											15	14	13	12	11			8	7			4	3	2	1
SALEABLE	NOT APPLICABLE	34822-0413	0	A	BLACK	64	63									54	53		51		49	66			
																38	37		35		33				
						65								28						22		20	19	18	17
											15	14	13	12				8	7			4	3	2	1
SALEABLE	NOT APPLICABLE	34822-0423	9	A	BLACK						59	58	57	56		54	53			50		66			
										44	43	42	41	40	39		37	36	35	34	33				
						65					31			28		26	25	24	23						
										16	15	14	13				9	8	7	6					
SALEABLE	NOT APPLICABLE	34566-9183	9	B	ST GRY	72	71	70	69	68	67		65	64	63	62	61	60	59		57	56	55	54	53
						52	51	50	49	48	47	46	45	44	43	42		40	39			36	35	34	33
						73				32	31	30	29	28	27	26	25	24	23	22	21		19		
										16	15	14	13	12	11	10	9		7	6		4	3	2	
SALEABLE	NOT APPLICABLE	34566-9193	9	F	NATURAL				69	68										58	57				
															43	42				38	37				33
						73						30											19	18	17
																		8					3	2	1
SALEABLE	NOT APPLICABLE	34822-0433	0	A	BLACK	64	63	62		60	59		57	56	55	54	53	52	51	50	49	66			
						48	47	46	45			42			39		37	36	35	34	33				
						65				32		30	29	28	27	26	25	24	23	22	21	20	19	18	17
										16	15	14	13	12	11	10	9	8	7	6			3	2	1
SALEABLE	NOT APPLICABLE	34822-0443	0	A	BLACK	64	63	62		60	59		57	56	55	54	53	52	51	50	49	66			
						48	47	46	45			42			39		37	36	35	34	33				
						65				32	31	30	29	28	27	26	25	24	23	22	21	20	19	18	17
										16	15	14	13	12	11	10	9	8	7	6			3	2	1

MX123 52/66/73/80-WAY RECEPTACLE ASSY SEALED PIN OUT SHEET

STATUS	GM PART #	HRNS CONN ASSY			TPA	GROMMET CAP																				
		MATERIAL/PART NUMBER	WIRE DRESS OPTION	KEY OPTION Fp	COLOR OPTION Fp	NUMBERS INDICATE CAVITIES OPEN FOR CIRCUITS Fp																				
SALEABLE	NOT APPLICABLE	34822-0453	0	A	BLACK						59	58	57	56		54	53			50		66				
										44	43	42	41	40	39		37	36	35	34	33					
						65					31			28		26	25	24	23							
										16	15	14	13				9	8	7	6						
SALEABLE	NOT APPLICABLE	34566-9213	0	B	ST GRY					68	67	66	65	64					59	58	57		55	54	53	
			51	50	49	48		46	45		43	42	41	40	39	38	37		35		33					
		73				32	31	30				26		24	23	22		20								
						16			13			10	9	8	7	6	5	4	3	2						
SALEABLE	NOT APPLICABLE	34566-9223	9	B	ST GRY	72										62	61	60	59				55			
			52			48	47	46					41	40		38	37	36	35							
		73						30								22	21	20	19	18						
						16	15	14								6		4	3		1					
SALEABLE	NOT APPLICABLE	34566-9233	9	C	BLUE		71				67		65	64			61	60	59		57			54		
			52	51	50	48	47		45	44			41		39		37			34	33					
		73				32				28	27		25		23					18						
						16	15	14	13	12	11	10	9	8	7	6	5									
SALEABLE	NOT APPLICABLE	34566-9243	9	B	ST GRY	72	71	70	69					64	63		61			58	57	56	55			
			52	51	50	49					43									38	37	36			33	
		73				32		30	29	28		26	25	24	23	22	21	20								
						16		14	13	12	11	10	9	8	7	6	5	4								
SALEABLE	NOT APPLICABLE	34566-9253	9	B	ST GRY	72	71	70	69	68	67		65	64	63	62	61	60	59		57	56	55	54	53	
			52	51	50	49	48	47	46	45	44	43	42		40	39				36	35	34	33			
		73				32	31	30	29	28	27	26	25	24	23	22	21									
						16	15	14	13	12	11	10	9		7	6		4	3	2						
SALEABLE	NOT APPLICABLE	34566-9263	9	B	ST GRY	72				68						62	61	60	59				55			
			52					46			43		41	40												
		73														22	21	20								
						16	15	14						8		6		4								
SALEABLE	NOT APPLICABLE	34822-0463	0	A	BLACK	64	63	62		60	59		57	56	55	54	53	52	51	50	49	66				
			48	47	46	45		43	42			39		37	36	35	34	33								
		65					32		30	29	28	27	26	25	24	23	22	21	20	19	18	17				
							16	15	14	13	12	11	10	9	8	7	6			3	2	1				
SALEABLE	NOT APPLICABLE	34822-0473	9	C	BLUE	64	63	62		60	59		57	56	55	54	53		51		49	66				
			48	47	46	45			42			39		37		35		33								
		65					32											21		19	18	17				
							16	15												3	2	1				
SALEABLE	NOT APPLICABLE	34822-0483	9	A	BLACK	64	63									54	53		51		49	66				
																38	37		35		33					
		65									28				24	23		21	20	19	18	17				
							15	14	13						8	7			4	3	2	1				
SALEABLE	NOT APPLICABLE	34566-9273	9	B	ST GRY	72	71	70	69	68	67		65	64	63		61	60	59		57	56	55	54	53	
					50	49	48	47	46		44	43	42		40	39			36	35	34	33				
		73				32	31	30	29	28	27	26	25	24	23	22	21									
						16	15	14	13	12	11	10	9		7	6		4	3	2						
SALEABLE	NOT APPLICABLE	34822-0493	0	C	BLUE	64	63	62		60	59		57	56	55	54	53	52	51	50	49	66				
			48	47	46	45			42			39		37	36	35	34	33								
		65					32		30	29	28	27	26	25	24	23	22	21	20	19	18	17				
							16	15	14	13	12	11	10	9	8	7	6			3	2	1				
SALEABLE	NOT APPLICABLE	34566-9283	9	G	BLUE	80	79	78							71				67							
			60	59	58	57			54			51	50	49	48	47			44			41				
			40	39		37				33	32		30	29	28	27		25	24							
					18						12	11		9	8			5		3	2					
SALEABLE	NOT APPLICABLE	34566-9293	9	G	BLUE	80	79	78							71				67							
			60	59	58	57			54			51	50	49	48	47			44			41				
			40	39		37				33	32		30	29	28	27		25	24							
			20	19	18						12	11		9	8			5		3	2					
SALEABLE	NOT APPLICABLE	34566-9313	9	A	BLACK	72								64		62	61			58	57	56	55	54	53	
			52	51			48		46	45		43		41	40				37							
		73					32		30	29		27		25						20						
							16	15		13		11	10	9					4							

molex

MX123 52/66/73/80-WAY RECEPTACLE ASSY SEALED PIN OUT SHEET

STATUS	GM PART #	HRNS CONN ASSY			TPA	GROMMET CAP																			
		MATERIAL/PART NUMBER	WIRE DRESS OPTION	KEY OPTION Fp	COLOR OPTION Fp	NUMBERS INDICATE CAVITIES OPEN FOR CIRCUITS Fp																			
SALEABLE	NOT APPLICABLE	34566-9323	9	A	BLACK	72								64		62	61		59	58	57	56	55	54	53
						52	51			48		46	45		43		41	40			37		35	34	
						73				32		30	29		27		25					20			
										16	15		13		11	10	9					4	3		
SALEABLE	NOT APPLICABLE	34566-9333	9	A	BLACK	72								64		62	61		59	58	57	56	55	54	
						52	51			48		46	45		43		41	40			37		35	34	
						73				32		30	29		27		25					20			
										16	15		13		11	10	9					4			
SALEABLE	NOT APPLICABLE	34566-9343	9	C	BLUE	72		70	69	68		66			63	62				58		56	55		53
									49			46			43	42		40		38		36	35		
						73					31	30	29			26		24		22	21	20	19		17
																						4	3	2	1
SALEABLE	NOT APPLICABLE	34822-0503	0	A	BLACK	64		62	61	60	59	58				54	53		51			66			
						48	47									38	37	36		34					
						65						30	29	28		26		24			21				17
											15		13				9		7			4	3	2	1
SALEABLE	NOT APPLICABLE	34822-0513	9	A	BLACK		63	62	61		59					54	53				49	66			
																38	37		35		33				
						65					31			28				24		22	21	20	19	18	17
											15	14	13	12				8	7			4	3	2	1
SALEABLE	NOT APPLICABLE	34566-9353	9	A	BLACK	72								64		62	61			58	57	56	55	54	53
						52	51			48		46	45		43		41	40			37		35	34	
						73				32		30	29		27		25					20			
										16	15		13		11	10	9					4			
SALEABLE	NOT APPLICABLE	34566-9363	9	A	BLACK	72								64		62	61				57	56	55	54	53
						52	51					46	45		43			40			37		35	34	
						73				32		30	29		27		25					20			
										16	15		13		11	10	9					4			
SALEABLE	NOT APPLICABLE	34566-9373	9	G	BLUE	80									71					66		64			
							59		57								49								
							39									30									
						20																			
SALEABLE	NOT APPLICABLE	34566-9383	9	A	BLACK	72	71	70	69	68				64	63	62	61		59	58	57	56	55	54	53
						52	51	50		48	47	46	45	44	43		41	40	39	38	37		35	34	33
						73				32		30	29		27	26	25	24				20	19	18	17
										16	15	14	13	12	11	10	9	8	7			4	3	2	1
SALEABLE	NOT APPLICABLE	34566-9393	0	B	ST GRY	72	71	70	69	68	67		65	64	63		61	60	59		57	56	55	54	53
						52	51	50	49	48	47	46	45	44	43	42		40	39			36	35	34	33
						73				32	31	30	29	28	27	26	25	24	23	22	21	20			
										16	15	14	13	12	11	10	9	8	7	6		4	3	2	
SALEABLE	NOT APPLICABLE	34566-9413	9	H	ST GRY																				
SALEABLE	NOT APPLICABLE	34566-9423	0	A	BLACK	72	71	70			67	66								58	57	56	55	54	53
						52	51	50			47	46							39		37	36	35		33
						73				32	31	30	29	28	27	26								18	17
										16	15	14	13	12	11	10		8	7				3	2	1
SALEABLE	NOT APPLICABLE	34566-9433	0	B	ST GRY	72	71	70	69	68	67	66	65	64	63		61			58	57	56	55	54	53
						52	51	50	49	48	47	46	45	44				40	39		37	36	35	34	33
						73						30	29	28	27	26	25	24			21				
										16		14	13	12		10	9	8		6	5			2	1
SALEABLE	NOT APPLICABLE	34566-9443	9	B	ST GRY	72	71	70	69	68	67		65	64	63	62	61	60	59		57	56	55	54	53
								50	49	48	47	46		44	43	42		40	39			36	35	34	33
						73				32	31	30	29	28	27	26	25	24	23	22	21				
										16	15	14	13	12	11	10	9		7	6		4	3	2	
SALEABLE	NOT APPLICABLE	34566-9453	0	A	BLACK	72	71	70	69		67			64			61	60	59		57	56	55	54	53
						52	51			48			45	44			41	40	39	38	37	36	35	34	
						73					31	30	29		27	26	25			22			19	18	
										16	15	14	13	12	11	10	9	8	7	6	5			2	

molex

MX123 52/66/73/80-WAY RECEPTACLE ASSY SEALED PIN OUT SHEET

STATUS	GM PART #	HRNS CONN ASSY			TPA	GROMMET CAP																			
		MATERIAL/PART NUMBER	WIRE DRESS OPTION	KEY OPTION Fp	COLOR OPTION Fp	NUMBERS INDICATE CAVITIES OPEN FOR CIRCUITS Fp																			
SALEABLE	NOT APPLICABLE	34566-9463	0	G	BLUE	80	79	78			75									66	65	64			
							59													46			43	42	41
							39	38	37		35					30				26	25	24		22	21
						20		18	17	16				12				8	7	6	5		3	2	1
SALEABLE	NOT APPLICABLE	34566-9473	0	G	BLUE	80	79	78			75									66	65	64		62	
							59						53							46			43	42	41
							39	38	37		35					30				26	25	24		22	21
						20		18	17	16				12				8	7	6	5		3	2	1
SALEABLE	NOT APPLICABLE	34566-9483	0	G	BLUE	80	79	78			75									66	65	64			
																				46			43	42	41
							39	38	37		35					30				26	25	24		22	21
						20		18	17	16				12				8	7	6	5		3	2	1
SALEABLE	NOT APPLICABLE	34566-9493	0	G	BLUE	80	79	78			75									66	65				
							59													46			43	42	41
							39	38	37		35					30				26	25	24		22	21
						20		18	17	16				12				8	7	6	5		3	2	1
SALEABLE	NOT APPLICABLE	34566-9513	0	G	BLUE	80	79	78	77	76	75	74	73	72	71	70	69	68	67	66	65	64	63	62	61
						60	59	58	57	56	55	54	53	52	51	50	49	48		46			43	42	41
							39	38	37		35					30				26	25	24		22	21
						20		18	17	16				12				8	7	6	5		3	2	1
SALEABLE	NOT APPLICABLE	34566-9523	0	G	BLUE	80	79	78			75									66	65	64		62	
							59		57				53							46			43	42	41
							39	38	37		35		33			30				26	25	24		22	21
						20		18	17	16								8	7	6	5		3	2	1
SALEABLE	NOT APPLICABLE	34822-0523	0	C	BLUE	64	63	62		60	59		57	56	55	54	53	52	51	50	49	66			
						48	47	46	45			42			39		37	36	35	34	33				
						65				32		30	29	28	27	26	25	24	23	22			19	18	17
										16	15	14	13	12	11	10	9	8	7	6			3	2	1
SALEABLE	NOT APPLICABLE	34566-9543	0	A	BLACK																				
									49	48	47	46	45	44	43			40		38	37	36		34	
						73				32	31		29	28	27		25	24	23	22		20	19	18	17
										16	15			12		10	9			6	5			2	1
SALEABLE	NOT APPLICABLE	34566-9553	0	C	BLUE							66	65	64	63	62		60	59		57	56	55	54	53
						52	51	50	49	48	47	46	45			42			39		37	36	35	34	33
						73				32		30	29	28	27	26	25	24	23	22			19	18	17
										16	15	14	13	12	11	10	9	8	7	6			3	2	1
SALEABLE	NOT APPLICABLE	34566-9563	0	C	BLUE	72	71	70	69		67	66	65	64				60				56		54	
						52	51	50	49	48	47	46	45	44				40	39	38				34	
						73					31	30		28		26	25	24	23	22	21	20			17
										16	15	14	13	12			9	8	7	6	5	4			
SALEABLE	NOT APPLICABLE	34566-9573	0	B	ST GRY	72	71	70	69	68	67		65	64	63		61	60	59		57	56	55	54	53
						52	51	50	49	48	47	46	45	44	43	42		40	39			36	35	34	33
						73				32	31	30	29	28	27	26	25	24	23	22	21				
										16	15	14	13	12	11	10	9	8	7	6		4	3	2	
SALEABLE	NOT APPLICABLE	34566-9583	0	B	ST GRY	72	71	70	69	68	67	66	65	64	63		61	60	59		57	56	55	54	
						52	51	50	49	48	47	46	45	44	43		41	40	39	38	37	36	35	34	33
						73				32	31	30	29	28		26		24	23	22	21	20	19	18	17
										16	15	14	13	12			9	8	7	6	5	4	3	2	1
SALEABLE	NOT APPLICABLE	34566-9593	0	A	BLACK	72		70			67				63			60	59	58	57	56	55		
						52	51			48	47				43	42		40	39	38	37	36	35		
						73								28	27									18	17
														12	11		9		7					2	1
SALEABLE	NOT APPLICABLE	34566-9613	0	C	BLUE		71	70	69		67	66	65	64				60				56			
						52	51	50	49		47	46	45	44				40	39					34	
						73					31	30		28		26	25	24	23	22	21	20	19	18	17
										16	15	14	13	12			9	8	7	6	5	4			
SALEABLE	NOT APPLICABLE	34566-9623	9	B	ST GRY	72	71	70						64	63		61			58	57	56	55		
						52	51	50							43					38	37	36			
						73				32		30	29	28		26	25	24	23	22	21	20			
										16		14	13		11	10	9	8	7	6	5	4			

MX123 52/66/73/80-WAY RECEPTACLE ASSY SEALED PIN OUT SHEET

STATUS	GM PART #	HRNS CONN ASSY			TPA	GROMMET CAP																			
		MATERIAL/PART NUMBER	WIRE DRESS OPTION	KEY OPTION Fp	COLOR OPTION Fp	NUMBERS INDICATE CAVITIES OPEN FOR CIRCUITS Fp																			
SALEABLE	NOT APPLICABLE	34566-9633	9	B	ST GRY	72	71	70	69	68	67		65	64	63		61	60	59		57	56	55	54	53
						52	51	50	49	48	47	46	45	44	43	42		40	39			36	35	34	33
						73				32	31	30	29	28	27	26	25	24	23	22	21	20			
										16	15	14	13	12	11	10	9		7	6			3	2	
SALEABLE	NOT APPLICABLE	34566-9643	9	A	BLACK				69					64	63		61		59						
						52				48				44	43		41		39	38			35	34	
						73						30	29												
																10					5			2	
SALEABLE	NOT APPLICABLE	34566-9653	9	G	BLUE	80														66	65				
							59		57																
							39									30									
						20																			
SALEABLE	NOT APPLICABLE	34566-9663	0	B	ST GRY	72	71	70	69	68	67	66	65	64	63		61			58	57	56	55	54	53
						52	51	50	49	48	47	46	45	44				40			37	36	35	34	33
						73				32		30	29	28		26	25	24			21				
										16		14	13	12		10	9	8		6	5			2	1
SALEABLE	NOT APPLICABLE	34822-0533	9	C	BLUE	64	63			60	59		57	56	55		53	52	51	50	49	66			
						48	47	46	45			42			39	38		36	35	34	33				
						65				32		30	29	28	27	26	25	24	23	22		20		18	17
										16		14	13	12	11	10	9	8	7	6			3	2	1
SALEABLE	NOT APPLICABLE	34822-0543	0	A	BLACK	64	63	62	61	60	59					54	53		51		49	66			
							47									38	37		35		33				
						65								28			25	24		22	21	20	19	18	17
											15	14	13	12				8	7			4	3	2	1
SALEABLE	NOT APPLICABLE	34822-0553	0	A	BLACK	64	63									54	53		51		49	66			
																38	37		35		33				
						65					31			28				24	23		21	20	19	18	17
											15	14	13					8	7			4	3	2	1
SALEABLE	NOT APPLICABLE	34822-0563	0	C	BLUE	64	63	62		60	59		57	56	55	54	53	52	51	50	49	66			
						48	47	46	45			42			39		37	36	35	34	33				
						65				32		30	29	28	27	26		24	23	22			19	18	17
										16	15	14	13	12	11	10	9	8	7	6			3	2	1
SALEABLE	NOT APPLICABLE	34566-9673	0	C	BLUE	72	71	70	69		67	66	65	64				60				56		54	
						52	51	50	49		47	46	45	44				40	39	38				34	
						73					31	30		28		26	25	24	23	22	21	20			17
										16	15	14	13	12			9	8	7	6	5	4			
SALEABLE	NOT APPLICABLE	34566-9683	0	B	ST GRY	72	71	70	69	68	67	66	65	64	63		61	60			57	56	55	54	
						52	51	50	49	48	47	46	45	44	43		41	40		38	37	36	35		33
						73				32	31	30	29	28		26		24	23	22	21	20	19		17
										16	15	14	13	12			9	8	7	6	5	4	3		1
SALEABLE	NOT APPLICABLE	34566-9693	0	A	BLACK	72		70			67				63			60	59	58	57	56	55		53
						52	51			48	47				43	42		40	39	38	37	36	35		33
						73								28										18	17
														12	11									2	1
SALEABLE	NOT APPLICABLE	34566-9713	0	B	ST GRY					68	67	66	65	64					59	58	57		55	54	53
							51	50	49	48		46	45		43	42		40	39	38	37		35		33
						73				32	31	30				26		24	23	22		20			
										16			13			10	9	8	7	6	5	4	3	2	
SALEABLE	NOT APPLICABLE	34566-9723	0	B	ST GRY	72	71	70	69	68	67	66	65	64	63		61			58	57	56	55		
						52	51	50	49	48	47	46	45		43			40			37	36			
						73				32		30	29	28		26	25	24			21		19		
										16		14	13	12	11	10	9	8		6	5				
SALEABLE	NOT APPLICABLE	34566-9733	0	A	BLACK	72	71	70			67	66							59						53
						52	51	50			47	46							39		37		35		33
						73						30	29	28	27	26					21				17
										16			13		11	10		8	7				3		1
SALEABLE	NOT APPLICABLE	34822-0573	0	A	BLACK	64	63									54	53		51		49	66			
																38	37		35		33				
						65								28				24		22		20	19	18	17
											15	14	13	12				8	7			4	3	2	1

molex

MX123 52/66/73/80-WAY RECEPTACLE ASSY SEALED PIN OUT SHEET

STATUS	GM PART #	HRNS CONN ASSY			TPA	GROMMET CAP																				
		MATERIAL/PART NUMBER	WIRE DRESS OPTION	KEY OPTION Fp	COLOR OPTION Fp	NUMBERS INDICATE CAVITIES OPEN FOR CIRCUITS Fp																				
SALEABLE	NOT APPLICABLE	34822-0583	0	A	BLACK						59	58	57	56		54	53			50		66				
										44			41				37	36	35	34	33					
						65					31			28		26	25	24	23							
										16	15	14	13				9	8		6						
SALEABLE	NOT APPLICABLE	34822-0593	0	A	BLACK	64	63	62		60	59		57	56	55	54	53		51		49	66				
		48	47	46	45			42						39			37		35		33					
		65				32															21		19	18	17	
						16	15																3	2	1	
SALEABLE	NOT APPLICABLE	34566-9743	0	B	ST GRY	72	71	70	69	68	67		65	64	63		61	60	59		57	56	55	54	53	
				50	49	48	47	46		44	43	42		40	39			36	35	34	33					
		73				32	31	30	29	28	27	26	25	24	23	22	21									
						16	15	14	13	12	11	10	9	8	7	6			3	2						
SALEABLE	NOT APPLICABLE	34566-9753	0	C	BLUE	72	71	70	69		67	66	65	64				60				56		54		
		52	51	50	49		47	46	45	44		42	41	40	39											
		73					31	30		28		26	25	24	23	22	21	20								
						16	15	14	13	12			9	8	7	6	5	4								
SALEABLE	NOT APPLICABLE	34566-9763	0	G	BLUE			78	77	76								67	66	65						
							55											47		45						
		40	39	38	37	36	35	34	33	32			29	28			26	25						22	21	
		20	19	18	17	16	15	14	13	12													3		1	
SALEABLE	NOT APPLICABLE	34566-9773	0	A	BLACK	72	71	70			67	66							59						53	
		52	51	50			47	46											39		37		35		33	
		73						30	29	28	27	26									21				17	
						16			13	12	11	10		8	7								3		1	
SALEABLE	NOT APPLICABLE	34566-9783	0	B	ST GRY	72	71	70	69	68	67		65	64	63	62	61	60	59		57	56	55	54	53	
				50	49	48	47	46		44	43	42		40	39			36	35	34	33					
		73				32	31	30	29	28	27	26	25	24	23	22	21									
						16	15	14	13	12	11	10	9	8	7	6			3	2						
SALEABLE	NOT APPLICABLE	34822-0603	0	C	BLUE	64	63	62		60	59		57	56	55	54	53		51		49	66				
		48	47	46	45			42			39		37		35		33									
		65				32																	19	18	17	
						16	15																3	2	1	
SALEABLE	NOT APPLICABLE	34822-0613	0	A	BLACK		63	62	61		59					54	53					66				
																38	37		35		33					
		65					31			28				24		22	21	20	19	18	17					
							15	14	13	12				8	7			4	3	2	1					
SALEABLE	NOT APPLICABLE	34566-9793	9	B	ST GRY	72	71		69	68	67		65	64	63		61			58	57	56	55	54	53	
		52	51	50	49	48	47			44	43		41			38	37	36								
		73							29	28		26	25	24	23	22		20								
						16		14	13	12		10	9	8	7	6	5	4								
SALEABLE	NOT APPLICABLE	34566-9813	9	A	BLACK	72	71	70			67	66	65	64	63	62	61		59				55	54	53	
		52	51				47	46	45	44	43	42	41		39			37	36	35	34	33				
		73						30	29				25											18	17	
									13		11			8	7				4	3		1				
SALEABLE	NOT APPLICABLE	34822-0623	0	A	BLACK	64	63	62		60	59		57	56	55	54	53	52	51	50	49	66				
		48	47	46	45			42			39		37	36	35	34	33									
		65				32	31	30	29	28	27	26	25	24	23	22			19	18	17					
						16	15	14	13	12	11	10	9	8	7	6			3	2	1					
SALEABLE	NOT APPLICABLE	34566-9823	0	A	BLACK	72	71	70	69	68	67		65	64	63		61	60	59		57	56	55	54	53	
		52	51	50	49	48	47	46	45	44	43	42		40	39			36	35	34	33					
		73				32	31	30	29	28	27	26	25	24	23	22	21									
						16	15	14	13	12	11	10	9	8	7	6			3	2						
SALEABLE	NOT APPLICABLE	34822-0633	0	A	BLACK		63	62	61		59					54	53				49	66				
																38	37		35		33					
		65				32	31			28				24		22	21	20	19	18	17					
							15	14	13	12				8	7			4	3	2	1					
SALEABLE	NOT APPLICABLE	34822-0643	9	C	BLUE	64	63			60	59		57	56	55		53	52	51	50	49	66				
		48	47	46	45			42			39	38		36	35	34	33									
		65				32		30	29	28	27	26	25	24	23	22		20		18	17					
						16	15	14	13	12	11	10	9	8	7	6			3	2	1					

molex

MX123 52/66/73/80-WAY RECEPTACLE ASSY SEALED PIN OUT SHEET

STATUS	GM PART #	HRNS CONN ASSY			TPA	GROMMET CAP																				
		MATERIAL/PART NUMBER	WIRE DRESS OPTION	KEY OPTION Fp	COLOR OPTION Fp	NUMBERS INDICATE CAVITIES OPEN FOR CIRCUITS Fp																				
SALEABLE	NOT APPLICABLE	34822-0653	0	A	BLACK	64	63	62	61		59					54	53				49	66				
																38	37		35		33					
						65					31			28				24		22	21	20	19	18	17	
											15	14	13	12				8	7			4	3	2	1	
SALEABLE	NOT APPLICABLE	34566-9833	9	B	ST GRY	72	71	70	69	68	67			64	63		61			58	57	56	55	54	53	
						52	51	50	49	48	47			44	43		41			38	37	36			33	
						73				32		30	29	28		26	25	24	23	22	21	20				
										16		14	13	12		10	9	8	7	6	5	4				
SALEABLE	NOT APPLICABLE	34566-9843	9	A	BLACK	72	71	70			67	66	65	64	63	62	61		59				55	54	53	
						52	51	50			47	46	45	44	43	42	41	40	39		37	36	35	34	33	
						73						30	29											18	17	
													13					8	7				3		1	
SALEABLE	NOT APPLICABLE	34566-9853	9	B	ST GRY	72	71	70	69	68	67		65	64	63	62	61	60	59	58	57	56	55	54	53	
						52	51	50	49	48	47	46	45	44	43	42		40	39			36	35	34	33	
						73				32	31	30	29	28	27	26	25	24	23	22	21	20				
										16	15	14	13	12	11	10	9		7	6			3	2		
SALEABLE	NOT APPLICABLE	34566-9863	0	B	ST GRY	72	71	70	69	68	67		65	64	63	62	61	60	59		57	56	55	54	53	
						52	51	50	49	48	47	46	45	44	43	42		40	39			36	35	34	33	
						73				32	31	30	29	28	27	26	25	24	23	22	21					
										16	15	14	13	12	11	10	9	8	7	6			3	2		
SALEABLE	NOT APPLICABLE	34566-0004	0	A	BLACK	72	71	70	69		67			64	63		61	60	59		57	56	55	54	53	
						52	51			48			45	44	43		41	40	39	38	37	36	35	34	33	
						73					31	30	29		27	26	25			22			19	18		
										16	15	14	13	12	11	10	9	8	7	6	5			2	1	
SALEABLE	NOT APPLICABLE	34566-0014	0	G	BLUE	80	79	78	77		75									66	65	64		62		
							59		57											46			43	42	41	
							39	38	37		35		33	32		30				26	25	24		22	21	
						20		18	17	16	15			12				8	7	6	5		3	2	1	
SALEABLE	NOT APPLICABLE	34566-0024	0	G	BLUE																					
SALEABLE	NOT APPLICABLE	34566-0034	0	G	BLUE	80	79	78			75									66	65	64		62		
							59		57				53							46			43	42	41	
							39	38	37		35		33	32		30				26	25	24		22	21	
						20		18	17	16				12				8	7	6	5		3	2	1	
SALEABLE	NOT APPLICABLE	34566-0044	0	A	BLACK	72	71	70	69		67			64			61	60	59		57	56	55	54	53	
						52	51			48			45	44			41	40	39	38	37	36	35	34	33	
						73					31	30	29		27	26	25			22			19	18		
										16	15	14	13	12	11	10	9	8	7	6	5		3	2		
SALEABLE	NOT APPLICABLE	34566-0054	0	G	BLUE	80	79	78	77		75									66	65	64		62		
							59		57											46			43	42	41	
							39	38	37		35		33			30				26	25	24		22	21	
						20		18	17	16	15			12				8	7	6	5		3	2	1	
SALEABLE	NOT APPLICABLE	34566-0064	0	A	BLACK	72	71	70	69		67			64	63		61	60	59		57	56	55	54	53	
						52	51			48			45	44	43		41	40	39	38	37	36	35	34		
						73					31	30	29		27	26	25			22			19	18		
										16	15	14	13	12	11	10	9	8	7	6	5			2	1	
SALEABLE	NOT APPLICABLE	34566-0084	0	A	BLACK			70	69		67			64			61	60	59		57	56	55	54	53	
						52	51			48			45	44			41	40	39	38	37	36	35	34	33	
						73					31	30	29		27	26	25			22			19			
										16	15	14	13	12	11	10		8	7	6	5		3	2		
SALEABLE	NOT APPLICABLE	34566-0094	0	B	ST GRY	72	71	70	69	68	67		65	64	63	62	61	60	59		57	56	55	54	53	
						52	51	50	49	48	47	46	45	44	43	42		40	39			36	35	34	33	
						73				32	31	30	29	28	27	26	25	24	23	22	21					
										16	15	14	13	12	11	10	9		7	6		4	3	2		
SALEABLE	NOT APPLICABLE	34566-0104	0	B	ST GRY	72	71	70	69	68	67		65	64	63	62	61	60	59		57	56	55	54	53	
								50	49	48	47	46		44	43	42		40	39			36	35	34	33	
						73				32	31	30	29	28	27	26	25	24	23	22	21					
										16	15	14	13	12	11	10	9		7	6		4	3	2		

molex

MX123 52/66/73/80-WAY RECEPTACLE ASSY SEALED PIN OUT SHEET

STATUS	GM PART #	HRNS CONN ASSY			TPA	GROMMET CAP																				
		MATERIAL/PART NUMBER	WIRE DRESS OPTION	KEY OPTION Fp	COLOR OPTION Fp	NUMBERS INDICATE CAVITIES OPEN FOR CIRCUITS Fp																				
SALEABLE	NOT APPLICABLE	34566-0114	0	B	ST GRY	72	71	70	69					64	63		61			58	57	56	55		
						52	51	50	49						43					38	37	36			33
						73				32		30	29	28		26	25	24	23	22	21	20			
										16	15	14	13	12	11	10	9	8	7	6	5	4			1
SALEABLE	NOT APPLICABLE	34566-0124	0	B	ST GRY	72										62	61	60	59				55		
						52				48	47	46						40							33
						73						30								22	21	20	19	18	17
										16	15	14								6		4	3		
SALEABLE	NOT APPLICABLE	34566-0134	0	B	ST GRY	72										62	61	60	59				55		
						52				48	47	46					41	40		38	37	36	35		
						73						30								22	21	20	19	18	
										16	15	14								6		4	3		1
SALEABLE	NOT APPLICABLE	34566-0144	9	B	ST GRY							66								58					
																	41			38	37				
						73																20	19	18	17
																		8			5	4			1
SALEABLE	NOT APPLICABLE	34822-0663	9	C	BLUE				61	60		58				54						66			
										44	43						37								
						65					31										21	20	19		
																					5	4			
SALEABLE	NOT APPLICABLE	34822-0673	0	A	BLACK	64						58	57	56	55			52	51	50		66			
						48	47	46	45	44	43	42	41	40	39			36		34					
						65				32		30	29		27	26	25								
										16				12	11	10	9			6	5				
SALEABLE	NOT APPLICABLE	34822-0683	9	A	BLACK		63	62	61	60	59					54	53				49	66			
										44						38	37		35		33				
						65					31			28				24	23	22	21	20	19	18	17
											15	14	13					8	7			4	3	2	1
SALEABLE	NOT APPLICABLE	34822-0693	9	C	BLUE			62	61			58				54						66			
										44	43		41	40			37								
						65					31											20	19		
																					5	4			
SALEABLE	NOT APPLICABLE	34566-0154	9	B	ST GRY	72	71	70	69	68	67	66	65	64	63	62	61	60	59		57	56	55	54	53
						52	51	50	49	48	47	46	45	44	43	42		40	39			36	35	34	33
						73				32	31	30	29	28	27	26	25	24	23	22	21				
										16	15	14	13	12	11	10	9	8	7	6			3	2	
SALEABLE	NOT APPLICABLE	34566-0164	0	G	BLUE	80	79	78	77		75									66	65	64		62	
							59		57				53							46		44	43	42	41
							39	38	37		35		33	32		30				26	25	24		22	21
						20		18	17	16				12	11			8	7	6	5		3	2	1
SALEABLE	NOT APPLICABLE	34566-0174	9	B	ST GRY	72	71	70			67	66						60			57				53
						52	51	50			47	46							39		37		35		33
						73						30	29	28			25	24	23	22		20	19		17
													13	12				8	7				3		1
SALEABLE	NOT APPLICABLE	34566-0184	9	B	ST GRY	72	71	70	69	68	67	66	65	64	63		61			58	57	56	55	54	53
						52	51	50	49	48	47	46	45	44	43	42	41	40			37	36			
						73				32		30	29	28		26	25	24			21				
										16		14	13	12	11	10	9	8		6	5				1

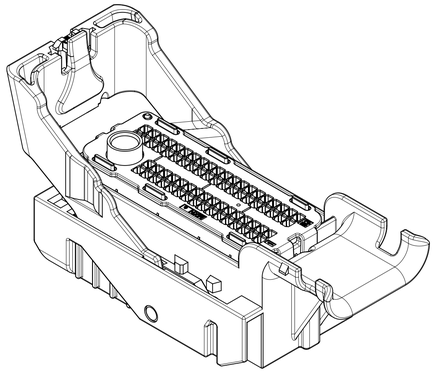

73 CKT
SCALE 3:2

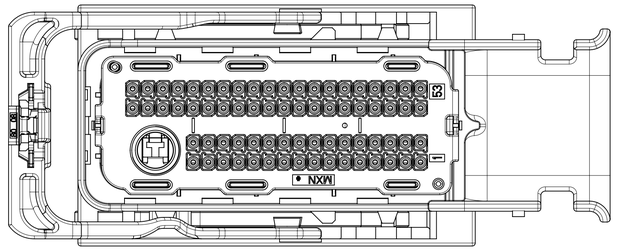

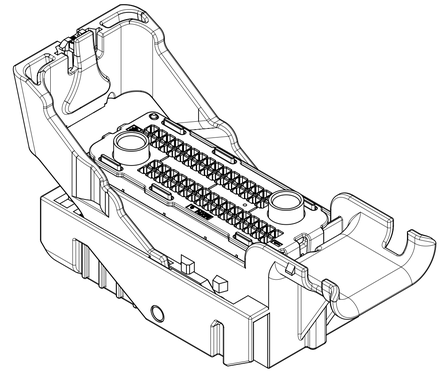

66 CKT
SCALE 3:2

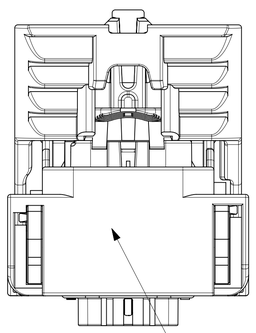

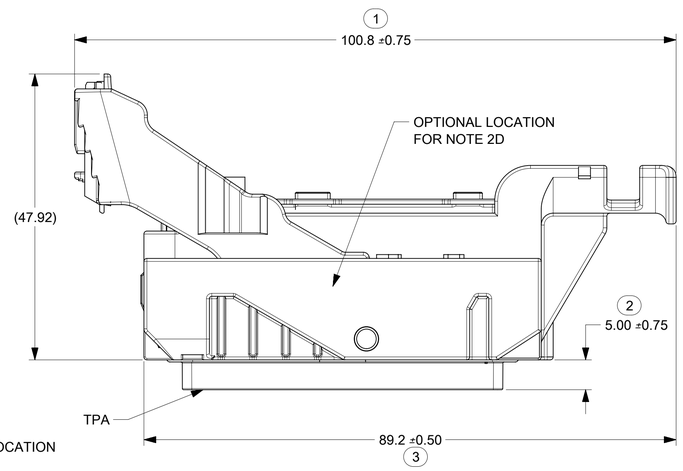

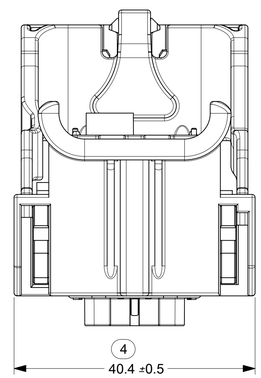

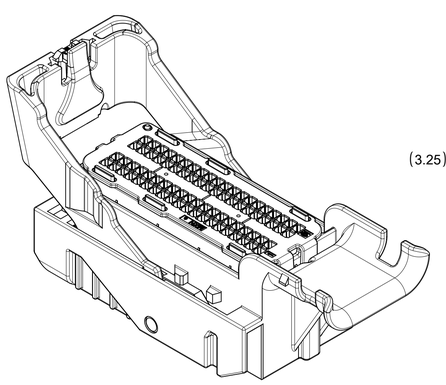

80 CKT
SCALE 3:2

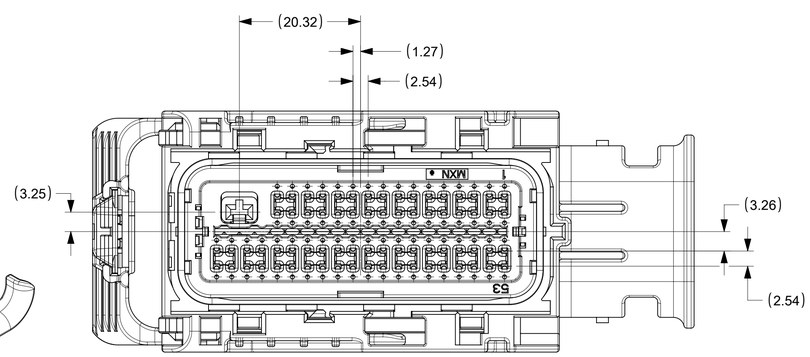

NOTES: UNLESS OTHERWISE SPECIFIED

1. MATERIAL:

A. RESIN: SEE COMPONENT DRAWINGS
B. COLOR: SEE TABLE

2. DESIGN - GENERAL:

A. THIS IS A 100% CAD GENERATED PART. THE CAD MATHEMATICAL DATA IS THE MASTER FOR THIS PART. FOR DIMENSIONAL OR ANY INFORMATION NOT SHOWN ON THIS DRAWING, ANALYZE THE CAD MODEL.
B. TOLERANCES:
a. LINEAR X.X ± 0.30
X.XX ± 0.10
X.XXX ± 0.10
b. ANGULAR X° ± 3.0°
C. CORNERS SHOWN AS SHARP TO BE R 0.2 MAX.
D. FOLLOWING PRODUCTION CODES TO BE PERMANENTLY MARKED & HUMAN READABLE TO A LETTER HEIGHT<3mm.
LINE #1: MATERIAL #:XXXXX-XXXX
LINE #2: DATE CODE: JJJY (JULIAN DAY, LAST DIGIT OF YEAR)
LINE #3: INSPECTION MACHINE CODE + SERIAL #: X_XXXXX
E-1. PARTS MUST BE FREE OF DISCOLORATION, SALT RESIDUE AND OTHER IMPERFECTIONS THAT AFFECT FIT OR FUNCTION.
E-2. SCRATCHES OR DENTS NOT TO EXCEED 0.13mm IN DEPTH.
F. CHANGES IN DESIGN FROM PART PREVIOUSLY APPROVED REQUIRES PRIOR ENGINEERING APPROVAL. THIS INCLUDES BUT IS NOT LIMITED TO DRAFT, MATERIAL OR PROCESSING.
G. SHALL CONFORM TO THE FOLLOWING PACKAGING SPECIFICATION : PK-31300-019

3. DESIGN - MANUFACTURING:

A. DRAFT TO BE WITHIN TOLERANCE.
B. ALLOWABLE FLASH 0.2 MAX HIGH X 0.13 MAX THICK.
C. ALLOWABLE PARTING LINE MISMATCH 0.2 MAX.
D. EJECTOR PINS MARK TO BE FLUSH TO 0.25 MAX DEPRESSED.
E. ALLOWABLE GATE VESTIGE TO BE FLUSH TO 0.25 MAX PROTRUSION.

4. SYSTEM REQUIREMENTS:
WHEN TESTED TO SAE/USCAR-2 REV: 3, APRIL 2001, AND GMW #3191, AUGUST 22, 2000 (DRAFT).

A. TPA (WITHOUT TERMINALS)
a. INSERTION FORCE FROM PRE-SET TO LOCK: ≥20N
b. REMOVAL FORCE FROM PRE-SET: ≥20N
B. CPA
a. INSERTION FORCE FROM PRE-SET TO LOCK WITH CONNECTOR UN-MATED: ≥60N
b. REMOVAL FORCE FROM PRE-SET: ≥30N
C. GROMMET CAP
a. REMOVAL FORCE FROM HOUSING WITH ENGAGED LATCHES: ≥110N
D. MATE ASSIST LEVER
a. INADVERTENT ACTUATION FORCE DURING SHIPPING, HANDLING OR PRE-ASSEMBLY: ≥190N

REV	DESCRIPTION
G63	CHANGE DIMENSION 47.92 AND 89.2±0.50 POSITION; CHANGE > TO ≥ IN NOTES 4; TAKE OFF MODEL NUMBERS IN SHEET 2~4
G62	UPDATE ALL VIEWS IN SHEET 1, SHEET 2 AND SHEET 3
G61	BOM MIGRATE TO 345660001-SD.pdf
G60	ADD NEW PIN CONFIGURATION 34822-0253 thru 34822-0293 , 34566-8773 thru 34566-8983, 34576-7663 thru 34576-7723
G59	UPDATED HARNESS ASSY PART# DESCRIPTIONS
G58	ADD NEW PIN CONFIGURATION 34566-8743 34566-8753 34566-8763 34822-0243
G56	TO RESOLVE ISSUES WITH VIEWS ON SHEETS 1, 2, 3 AND 4
G55	ADDED HARNESS CONNECTOR ASSEMBLY PART NUMBERS
G54	ADDED KNOCKOUT PATTERNS
G53	UPDATED DRAWING TO INCLUDE ISO WIRE AND AWG WIRE HRNS CONN ASSEMBLY PART NUMBERS
G52	ADD NEW PIN CONFIGURATION 34566-8613 34566-8623
G51	ADD NEW PIN CONFIGURATION 34566-8563 34566-8573 34566-8583 34566-8593 34822-0183 34822-0193 34822-0203 34822-0213
G50	ADD NEW PIN CONFIGURATION 34566-8543 34566-8553
G49	ADD NEW PIN CONFIGURATION 34566-8443 34566-8453 34566-8463 34566-8473 34566-8483 34566-8493 34566-8513 34566-8523 34566-8533
G48	ADD NEW PIN CONFIGURATION 34566-8393 34566-8413 34566-8423 34566-8433
G47	SHEETS SEQUENCE ARE CORRECTED
G46	ADD NEW PIN CONFIGURATION 34566-8223 34566-8233 34566-8243 34566-8253 34566-8263 34566-8273 34566-8283 34566-8293 34566-8313 34566-8323 34566-8333 34566-8343 34566-8353 34566-8363 34566-8373 34566-8383
G45	NX RE-MASTERING
G44	ADD NEW PIN CONFIGURATION 34566-8173
G43	ADD NEW PIN CONFIGURATION 34566-8163 34566-2493 SAME AS P/N 34566-3863

SYMBOLS	
E =	0
E =	0
E =	0
S =	0
▼ =	0
C =	0
☒ =	0
■ =	0
V =	0

THIS DRAWING CONTAINS INFORMATION THAT IS PROPRIETARY TO MOLEX ELECTRONIC TECHNOLOGIES, LLC AND SHOULD NOT BE USED WITHOUT WRITTEN PERMISSION

DIMENSION UNITS	SCALE
MM	2:1

GENERAL TOLERANCES (UNLESS SPECIFIED)

ANGULAR TOL	±	°
4 PLACES	±	
3 PLACES	±	
2 PLACES	±	
1 PLACE	±	
0 PLACES	±	

DRAFT WHERE APPLICABLE MUST REMAIN WITHIN DIMENSIONS

CURRENT REV DESC:

EC NO: 605052
DRWN: HKLIANG 2018/09/27
CHK'D: JDENG02 2018/10/10
APPR: JDENG02 2018/10/10

INITIAL REVISION:
DRWN: TYE 2016/05/06
APPR: SKRAJENDRANA 2016/08/22

THIRD ANGLE PROJECTION | DRAWING: D-SIZE | SERIES: 34566

molex

MX123
66/73/80CKT HRNS CONN ASSY

PRODUCT CUSTOMER DRAWING

DOCUMENT NUMBER	DOC TYPE	DOC PART	REVISION
SD-34566-001	PSD	000	G63

MATERIAL NUMBER	CUSTOMER	SHEET NUMBER
SEE TABLE	GENERAL MARKET	1 OF 8

DOCUMENT STATUS	P1	RELEASE DATE	2018/10/10 03:26:09

FORMAT: PS_PRODUCT_CUSTOMER_DWG
DATE: 2018/10/10

80 CKT

WIRE DRESS OPTION 0

HOUSING ONLY, SHOWN FOR CLARITY

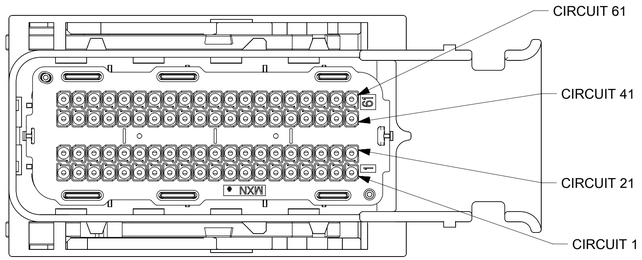

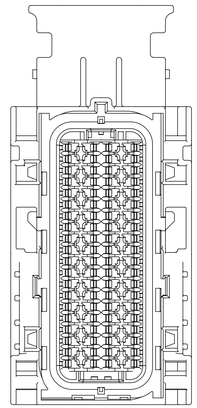

KEY G

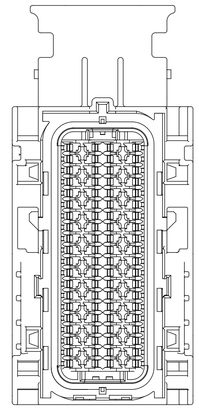

KEY H

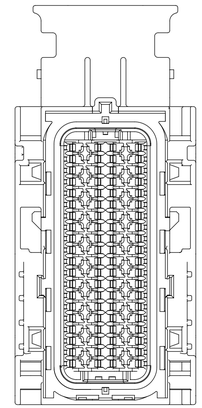

KEY J

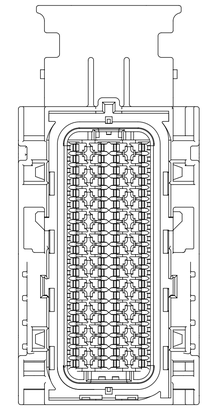

KEY K

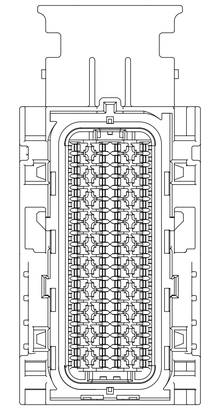

KEY L

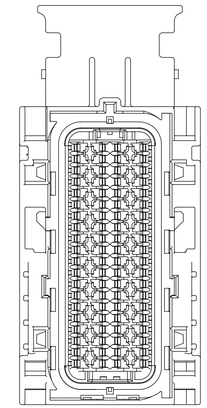

KEY M

WIRE DRESS OPTION 9

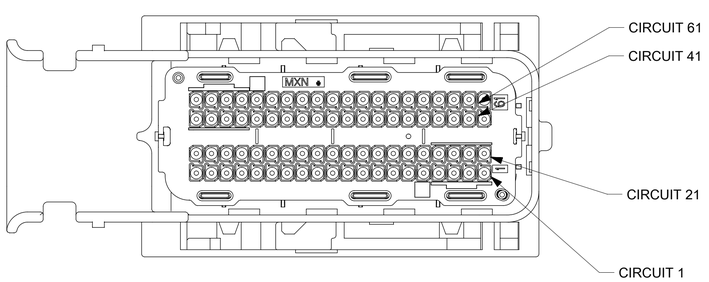

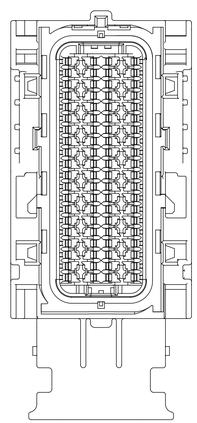

KEY G

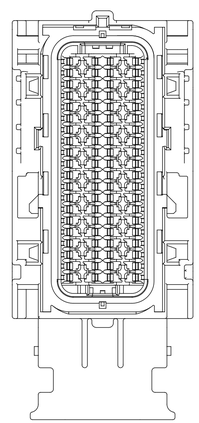

KEY H

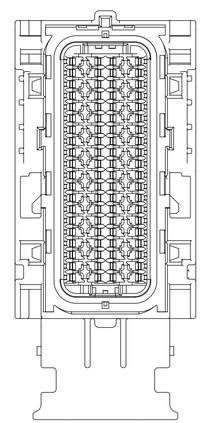

KEY J

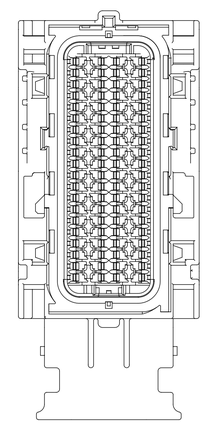

KEY K

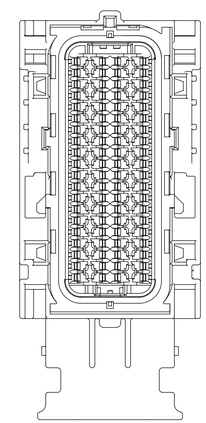

KEY L

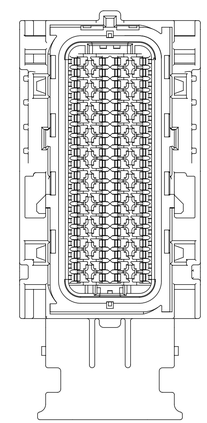

KEY M

SYMBOLS	
A	= 0
B	= 0
E	= 0
S	= 0
	= 0
C	= 0
	= 0
	= 0
D	= 0

THIS DRAWING CONTAINS INFORMATION THAT IS PROPRIETARY TO MOLEX ELECTRONIC TECHNOLOGIES, LLC AND SHOULD NOT BE USED WITHOUT WRITTEN PERMISSION

DIMENSION UNITS	SCALE
MM	
GENERAL TOLERANCES (UNLESS SPECIFIED)	
ANGULAR TOL ±	°
4 PLACES	±
3 PLACES	±
2 PLACES	±
1 PLACE	±
0 PLACES	±
DRAFT WHERE APPLICABLE MUST REMAIN WITHIN DIMENSIONS	

CURRENT REV DESC:

EC NO:	605052	
DRWN:	HKLIANG	2018/09/27
CHK'D:	JDENG02	2018/10/10
APPR:	JDENG02	2018/10/10

INITIAL REVISION:

DRWN:	TYE	2016/05/06
APPR:	SKRAJENDRANA	2016/08/22

molex

MX123
66/73/80CKT HRNS CONN ASSY

PRODUCT CUSTOMER DRAWING

DOCUMENT NUMBER	DOC TYPE	DOC PART	REVISION
SD-34566-001	PSD	000	G63

THIRD ANGLE PROJECTION	DRAWING	SERIES	MATERIAL NUMBER	CUSTOMER	SHEET NUMBER
	D-SIZE	34566	SEE TABLE	GENERAL MARKET	2 OF 8

DOCUMENT STATUS	P1	RELEASE DATE	2018/10/10 03:26:09

73 CKT

WIRE DRESS OPTION 0

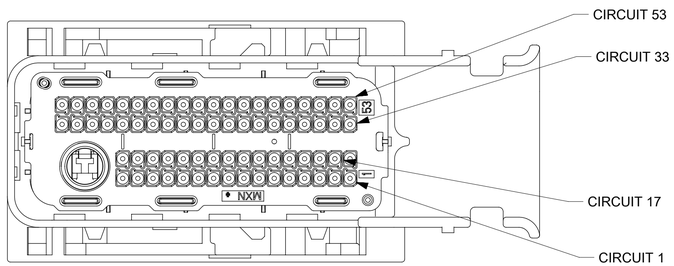

HOUSING ONLY, SHOWN FOR CLARITY

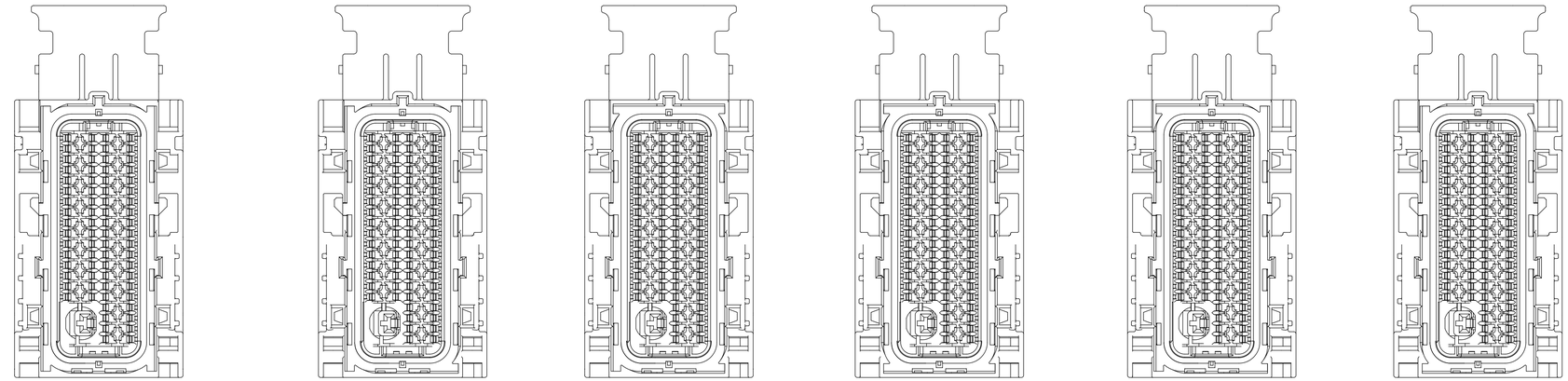

KEY A | KEY B | KEY C | KEY D | KEY E | KEY F

WIRE DRESS OPTION 9

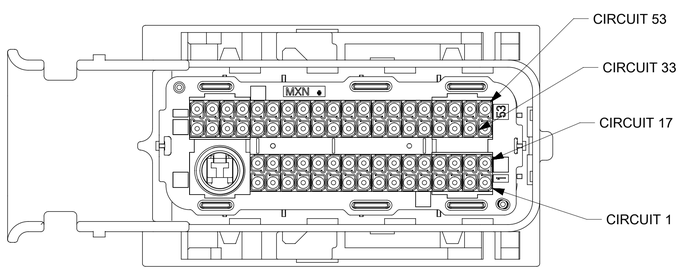

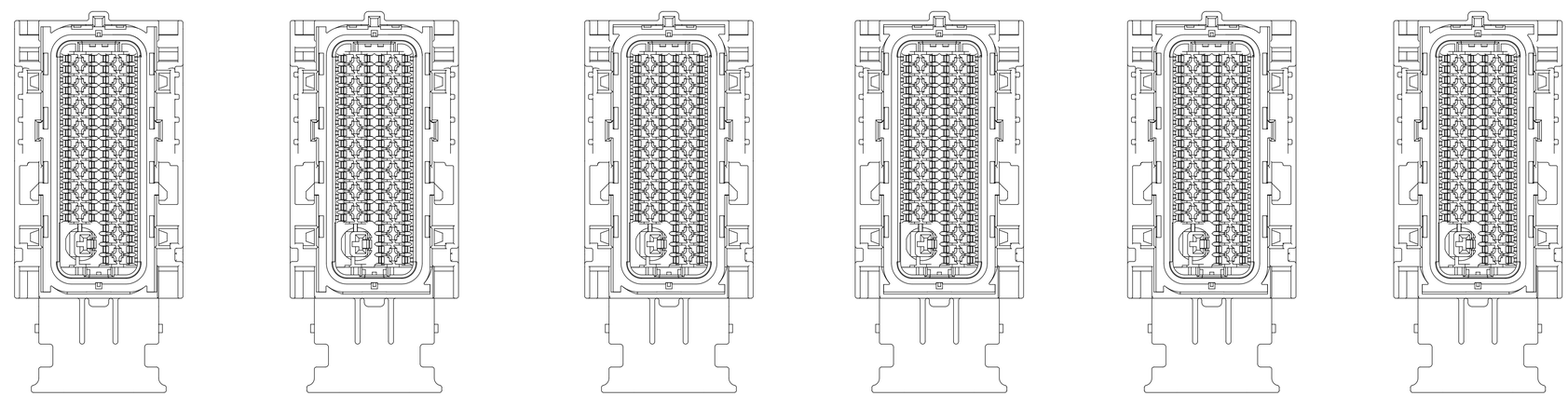

KEY A | KEY B | KEY C | KEY D | KEY E | KEY F

SYMBOLS	
A	= 0
B	= 0
E	= 0
S	= 0
	= 0
C	= 0
	= 0
	= 0
D	= 0

THIS DRAWING CONTAINS INFORMATION THAT IS PROPRIETARY TO MOLEX ELECTRONIC TECHNOLOGIES, LLC AND SHOULD NOT BE USED WITHOUT WRITTEN PERMISSION

DIMENSION UNITS	SCALE
MM	
GENERAL TOLERANCES (UNLESS SPECIFIED)	
ANGULAR TOL ± °	
4 PLACES	±
3 PLACES	±
2 PLACES	±
1 PLACE	±
0 PLACES	±
DRAFT WHERE APPLICABLE MUST REMAIN WITHIN DIMENSIONS	

CURRENT REV DESC:

EC NO: 605052
DRWN: HKLIANG 2018/09/27
CHK'D: JDENG02 2018/10/10
APPR: JDENG02 2018/10/10

INITIAL REVISION:
DRWN: TYE 2016/05/06
APPR: SKRAJENDRANA 2016/08/22

THIRD ANGLE PROJECTION | DRAWING: D-SIZE | SERIES: 34566

molex

MX123
66/73/80CKT HRNS CONN ASSY

PRODUCT CUSTOMER DRAWING

DOCUMENT NUMBER	DOC TYPE	DOC PART	REVISION
SD-34566-001	PSD	000	G63

MATERIAL NUMBER	CUSTOMER	SHEET NUMBER
SEE TABLE	GENERAL MARKET	3 OF 8

DOCUMENT STATUS	P1	RELEASE DATE	2018/10/10 03:26:09

TEMPLATE FORMAT - DO NOT MODIFY
REVISION: A
DATE: 2016/06/07

66 CKT

HOUSING ONLY, SHOWN FOR CLARITY

WIRE DRESS OPTION 0

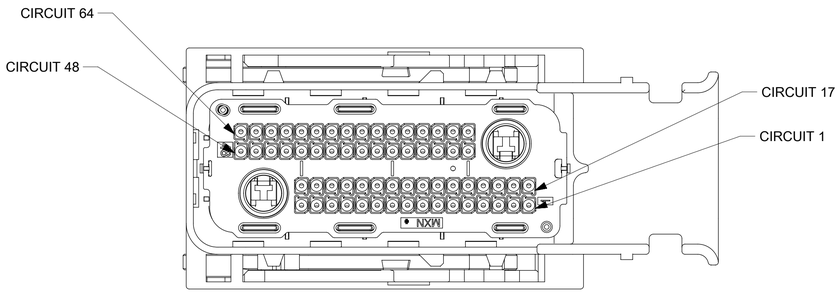

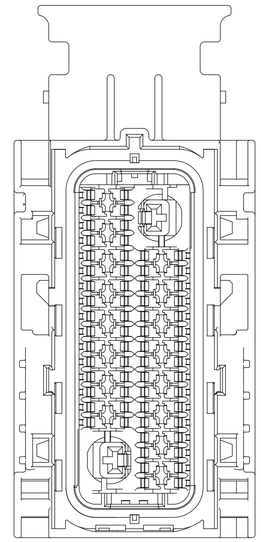

KEY A

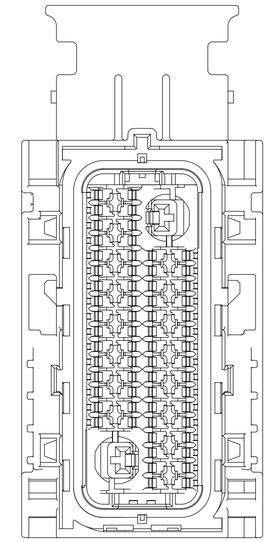

KEY C

WIRE DRESS OPTION 9

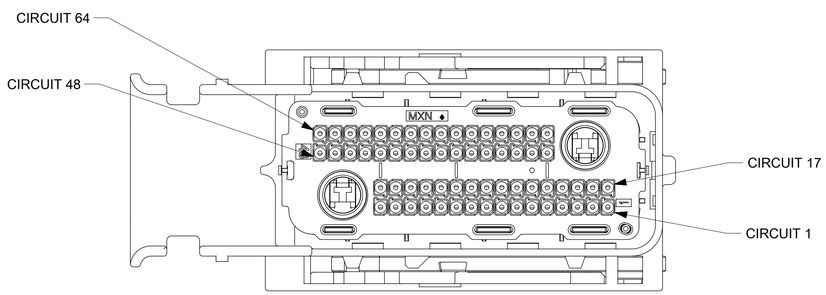

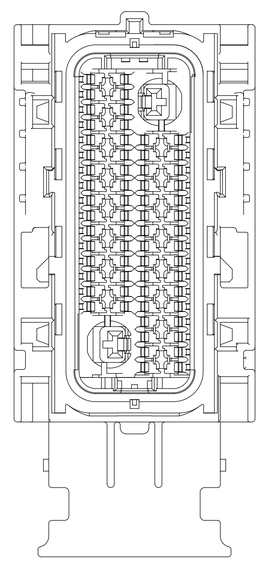

KEY A

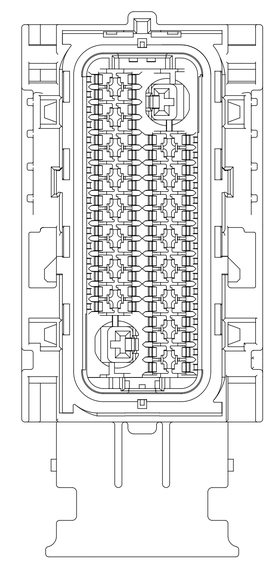

KEY C

SYMBOLS	
E = 0	
E = 0	
E = 0	
S = 0	
= 0	
C = 0	
= 0	
= 0	
= 0	

THIS DRAWING CONTAINS INFORMATION THAT IS PROPRIETARY TO MOLEX ELECTRONIC TECHNOLOGIES, LLC AND SHOULD NOT BE USED WITHOUT WRITTEN PERMISSION

DIMENSION UNITS	SCALE
MM	2:1

GENERAL TOLERANCES (UNLESS SPECIFIED)

ANGULAR TOL	±	°
4 PLACES	±	
3 PLACES	±	
2 PLACES	±	
1 PLACE	±	
0 PLACES	±	

DRAFT WHERE APPLICABLE MUST REMAIN WITHIN DIMENSIONS

CURRENT REV DESC:

EC NO:	605052	
DRWN:	HKLIANG	2018/09/27
CHK'D:	JDENG02	2018/10/10
APPR:	JDENG02	2018/10/10

INITIAL REVISION:

DRWN:	TYE	2016/05/06
APPR:	SKRAJENDRANA	2016/08/22

molex

MX123
66/73/80CKT HRNS CONN ASSY

PRODUCT CUSTOMER DRAWING

DOCUMENT NUMBER	DOC TYPE	DOC PART	REVISION
SD-34566-001	PSD	000	G63

THIRD ANGLE PROJECTION	DRAWING	SERIES	MATERIAL NUMBER	CUSTOMER	SHEET NUMBER
	D-SIZE	34566	SEE TABLE	GENERAL MARKET	4 OF 8

DOCUMENT STATUS	P1	RELEASE DATE	2018/10/10 03:26:09

HRNS ASSY
COMPONENT LIST

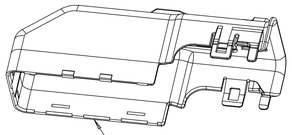

DRESS COVER
MATERIAL #: SEE HRNS ASSY TABLE

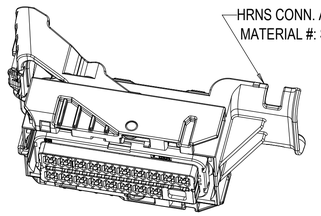

HRNS CONN. ASSY
MATERIAL #: SEE HRNS ASSY TABLE

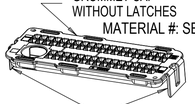

GROMMET CAP
WITHOUT LATCHES
MATERIAL #: SEE HRNS ASSY TABLE

LATCHES
NEED TO BE BROKEN OFF

AWG WIRE HRNS ASSY TABLE

	TESTED	HRNS ASSY				HRNS CONN ASSY	DRESS COVER	GROMMET CAP	MX64 WIRE ASSY PER E-33468-001							2.8mm YESC SEALED FEMALE TERMINAL TIN						TY-RAP	RUBBER BAND
		MATERIAL #	CIRCUIT ID	KEY OPTION	WIRE DRESS OPTION	MATERIAL #	MATERIAL #	MATERIAL #	MATERIAL #	RCPT PLATING	SAE WIRE SIZE #	WIRE TYPE	PIGTAIL OR LOOPED	"LMX" IN METERS 10%	QTY	MATERIAL #	SAE WIRE SIZE #	WIRE TYPE	PIGTAIL OR LOOPED	"LMX" IN METERS 10%	QTY	QTY	QTY
	NO	34070-9234	80	H	0	34566-0803	34565-0003	34571-0301	334670203	Ag	18	TXL	PGTL	3	80	N/A	N/A	N/A	N/A	N/A	N/A	6	0
	NO	34070-9934	73	A	0	34566-0103	34565-0003	34571-0101	334670203	Ag	18	TXL	PGTL	3	72	343670005	14	TXL	PGTL	3	1	6	0
	NO	34070-9834	73	B	0	34566-0203	34565-0003	34571-0101	334670203	Ag	18	TXL	PGTL	3	72	343670005	14	TXL	PGTL	3	1	6	0
H30	NO	34330-9214	80	H	0	34566-0803	34565-0003	N/A	334670204	Ag	18	TXL	LPD	1	40	N/A	N/A	N/A	N/A	N/A	N/A	3	1
	NO	34330-9914	73	A	0	34566-0103	34565-0003	N/A	334670204	Ag	18	TXL	LPD	1	36	343670005	14	TXL	LPD	3	1	3	1
	NO	34330-9814	73	B	0	34566-0203	34565-0003	N/A	334670204	Ag	18	TXL	LPD	1	36	343670005	14	TXL	LPD	3	1	3	1
H30	NO	34333-9214	80	H	0	34566-0803	34565-0003	34571-0301	334670205	Ag	18	PTFE	PGTL	1	40	N/A	N/A	N/A	N/A	N/A	N/A	3	0
	NO	34333-9914	73	A	0	34566-0103	34565-0003	34571-0101	334670205	Ag	18	PTFE	PGTL	1	72	N/A	14	PTFE	PGTL	1	1	3	0
	NO	34333-9814	73	B	0	34566-0203	34565-0003	34571-0101	334670205	Ag	18	PTFE	PGTL	1	72	N/A	14	PTFE	PGTL	1	1	3	0
	NO	34333-9234	80	H	0	34566-0803	34565-0003	34570-0301	334670206	Ag	18	PTFE	PGTL	3	80	N/A	N/A	N/A	N/A	N/A	N/A	6	0
	NO	34333-9934	73	A	0	34566-0103	34565-0003	34571-0101	334670206	Ag	18	PTFE	PGTL	3	72	343670006	14	PTFE	PGTL	3	1	6	0
	NO	34333-9834	73	B	0	34566-0203	34565-0003	34571-0101	334670206	Ag	18	PTFE	PGTL	3	72	343670006	14	PTFE	PGTL	3	1	6	0
	NO	34070-8734	66	A	0	34822-0013	34565-0003	34822-5011	334670203	Ag	18	TXL	PGTL	3	64	343670005	14	TXL	PGTL	3	2	3	0
	NO	34070-8754	66	A	0	34822-0013	34565-0003	34822-5011	334670203	Ag	18	TXL	PGTL	5	64	343670007	14	TXL	PGTL	5	2	10	0
	NO	34070-9434	73	F	0	34070-0603	34565-0003	34571-0101	334670203	Ag	18	TXL	PGTL	3	72	343670005	14	TXL	PGTL	3	1	6	0
	NO	34070-9434	73	F	9	34070-1803	34565-0003	34571-0501	334670203	Ag	18	TXL	PGTL	3	72	343670005	14	TXL	PGTL	3	1	6	0
	NO	34070-8534	66	C	0	34822-0033	34565-0003	34571-5011	334670203	Ag	18	TXL	PGTL	3	64	343670005	14	TXL	PGTL	3	2	3	0
	NO	34070-8704	66	A	0	34822-0013	34822-0033	34822-5031	N/A	N/A	N/A	N/A	N/A	N/A	N/A	343670005	14	TXL	PGTL	3	2	N/A	N/A
	NO	34070-8504	66	C	0	34822-0033	34822-0033	34822-5031	N/A	N/A	N/A	N/A	N/A	N/A	N/A	343670005	14	TXL	PGTL	3	2	N/A	N/A
	NO	34330-8734	66	A	0	34822-0013 (QTY2)	34565-0003	N/A	334670208	Ag	18	TXL	LPD	3	64	343670008	14	TXL	LPD	3	2	3	N/A

RUBBER BAND
DESCRIPTION: #84 3.5" X 0.5"

SUGGESTED SOURCE:
MANUFACTURER: ALLIANCE
PART #: 987-370
VENDOR: OFFICE DEPOT
VENDOR #: 109099

TY-RAP
DESCRIPTION: SIZE TY25 CABLE TIE

SUGGESTED SOURCE:
MANUFACTURER: THOMAS & BETTS
PART #: TY25M
VENDOR: CRESENT ELEC
VENDOR #: 104144

HRNS ASSY

MX64 WIRE ASSY LOOPED
MATERIAL #: SEE HRNS ASSY TABLE

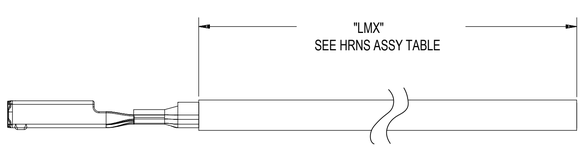

MX64 WIRE ASSY PIGTAIL
MATERIAL #: SEE HRNS ASSY TABLE

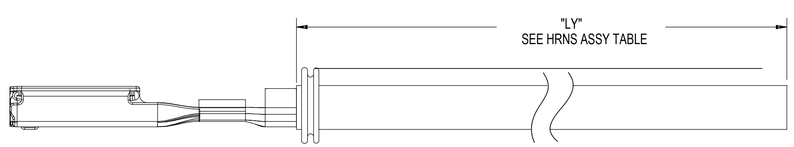

2.8mm YESC SEALED FEMALE PIGTAIL ASSY
MATERIAL #: SEE HRNS ASSY TABLE

PRODUCTION PART # FOR HARNESS ASSEMBLY (WITH WIRES) XXXXX-KKWP

XXXXX- SERIES NUMBER			
SERIES #	CKT SIZE	WIRE TYPE	WIRE DRESS
34070	73/80/66	TXL	PGTL
34330	73/80/66	TXL	LPD
34333	73/80/66	PTFE	PGTL

KK- HARNESS CONNECTOR KEY	
#	73/80 KEY
99	A
98	B
97	C
96	D
95	E
94	F
93	G
92	H
91	J
90	K
89	L
88	M
#	66 KEY
87	A
86	B
85	C

H13

W- MX64 CRIMPED LEAD WIRE LENGTH (m)

P- MX64 RECPT. TERMINAL PLATING
3 - Au
4 - Ag

NOTES: UNLESS OTHERWISE SPECIFIED APPLIES TO "HRNS ASSY" ONLY
1. REFER TO: PACKAGING DRAWING # PK-31300-078
2. FOR HRNS ASSY WITH WIRE ASSY SEE NEXT PAGE

THIS DRAWING CONTAINS INFORMATION THAT IS PROPRIETARY TO MOLEX ELECTRONIC TECHNOLOGIES, LLC AND SHOULD NOT BE USED WITHOUT WRITTEN PERMISSION

SYMBOLS	
EV	= 0
EC	= 0
EP	= 0
S	= 0
▼	= 0
C	= 0
☒	= 0
■	= 0
V	= 0

DIMENSION UNITS: MM
SCALE
GENERAL TOLERANCES (UNLESS SPECIFIED)
ANGULAR TOL ± °
4 PLACES ±
3 PLACES ±
2 PLACES ±
1 PLACE ±
0 PLACES ±
DRAFT WHERE APPLICABLE MUST REMAIN WITHIN DIMENSIONS

CURRENT REV DESC:

EC NO: 605052
DRWN: HKLIANG 2018/09/27
CHK'D: JDENG02 2018/10/10
APPR: JDENG02 2018/10/10

INITIAL REVISION:
DRWN: TYE 2016/05/06
APPR: SKRAJENDRANA 2016/08/22

THIRD ANGLE PROJECTION | DRAWING: D-SIZE | SERIES: 34566

molex

MX123
66/73/80CKT HRNS CONN ASSY

PRODUCT CUSTOMER DRAWING

DOCUMENT NUMBER	DOC TYPE	DOC PART	REVISION
SD-34566-001	PSD	000	G63

MATERIAL NUMBER	CUSTOMER	SHEET NUMBER
SEE TABLE	GENERAL MARKET	5 OF 8

DOCUMENT STATUS	P1	RELEASE DATE	2018/10/10 03:26:09

FORMAT: C-SIZE
TEMPLATE: 31000-001-01
DATE: 2016/05/06

AWG WIRE HRNS ASSY TABLE

	TESTED	HRNS ASSY MATERIAL #	HRNS ASSY CIRCUIT ID	HRNS ASSY KEY OPTION	HRNS ASSY WIRE DRESS OPTION	HRNS CONN ASSY MATERIAL #	DRESS COVER MATERIAL #	GROMMET CAP MATERIAL #	MX64 WIRE ASSY PER E-33468-001 MATERIAL #	MX64 RCPT PLATING	MX64 SAE WIRE SIZE #	MX64 WIRE TYPE	MX64 PIGTAIL OR LOOPED	MX64 "LMX" IN METERS 10%	MX64 QTY	2.8mm YESC SEALED FEMALE TERMINAL TIN MATERIAL #	2.8mm SAE WIRE SIZE #	2.8mm WIRE TYPE	2.8mm PIGTAIL OR LOOPED	2.8mm "LMX" IN METERS 10%	2.8mm QTY	TY-RAP QTY	RUBBER BAND QTY
	NO	34070-9933	73	A	0	34566-0103	34565-0003	34571-0101	334670103	Au	18	TXL	PGTL	3	72	343670005	14	TXL	PGTL	3	1	6	0
	NO	34070-9833	73	B	0	34566-0203	34565-0003	34571-0101	334670103	Au	18	TXL	PGTL	3	72	343670005	14	TXL	PGTL	3	1	6	0
	NO	34070-9913	73	A	0	34566-0103	34565-0003	34571-0101	334670102	Au	18	TXL	PGTL	1	72	343670005	14	TXL	PGTL	3	1	3	0
	NO	34070-9813	73	B	0	34566-0203	34565-0003	34571-0101	334670102	Au	18	TXL	PGTL	1	72	343670005	14	TXL	PGTL	3	1	3	0
	NO	34333-9913	73	A	0	34566-0103	34565-0003	34571-0101	334670105	Au	18	PTFE	PGTL	1	72	N/A	14	PTFE	PGTL	1	1	3	0
	NO	34333-9813	73	B	0	34566-0203	34565-0003	34571-0101	334670105	Au	18	PTFE	PGTL	1	72	N/A	14	PTFE	PGTL	1	1	3	0
	NO	34333-9933	73	A	0	34566-0103	34565-0003	34571-0101	334670106	Au	18	PTFE	PGTL	3	72	343670006	14	PTFE	PGTL	3	1	6	0
	NO	34333-9833	73	B	0	34566-0203	34565-0003	34571-0101	334670106	Au	18	PTFE	PGTL	3	72	343670006	14	PTFE	PGTL	3	1	6	0
	NO	34070-9233	80	H	0	34566-0803	34565-0003	34571-0301	334670103	Au	18	TXL	PGTL	3	80	N/A	N/A	N/A	N/A	N/A	N/A	6	0
	NO	34070-9213	80	H	0	34566-0803	34565-0003	34571-0301	334670102	Au	18	TXL	PGTL	1	80	N/A	N/A	N/A	N/A	N/A	N/A	3	0
	NO	34333-9213	80	H	0	34566-0803	34565-0003	34571-0301	334670105	Au	18	PTFE	PGTL	1	80	N/A	N/A	N/A	N/A	N/A	N/A	3	0
	NO	34333-9233	80	H	0	34566-0803	34565-0003	34571-0301	334670106	Au	18	PTFE	PGTL	3	80	N/A	N/A	N/A	N/A	N/A	N/A	6	0
	YES	34330-9913	73	A	0	34566-0103	34565-0003	N/A	334670104	Au	18	TXL	LPD	1	36	343670005	14	TXL	LPD	3	1	3	1
	YES	34330-9813	73	B	0	34566-0203	34565-0003	N/A	334670104	Au	18	TXL	LPD	1	36	343670005	14	TXL	LPD	3	1	3	1
H30	YES	34330-9213	80	H	0	34566-0803	34565-0003	34571-0301	334670104	Au	18	TXL	LPD	1	40	N/A	N/A	N/A	N/A	N/A	N/A	3	1
	NO	34070-9733	73	C	0	34566-0303	34565-0003	34571-0101	334670103	Au	18	TXL	PGTL	3	72	343670005	14	TXL	PGTL	3	1	6	0
	NO	34070-9713	73	C	0	34566-0303	34565-0003	34571-0101	334670102	Au	18	TXL	PGTL	1	72	343670005	14	TXL	PGTL	3	1	3	0
	NO	34330-9713	73	C	0	34566-0303	34565-0003	34571-0101	334670104	Au	18	TXL	LPD	1	36	343670005	14	TXL	LPD	3	1	3	1
	NO	34333-9713	73	C	0	34566-0303	34565-0003	34571-0101	334670105	Au	18	PTFE	PGTL	1	72	N/A	14	PTFE	PGTL	1	1	3	0
	NO	34333-9733	73	C	0	34566-0303	34565-0003	34571-0101	334670106	Au	18	PTFE	PGTL	3	72	343670006	14	PTFE	PGTL	3	1	6	0
	NO	34070-9333	80	G	0	34566-0703	34565-0003	34571-0301	334670103	Au	18	TXL	PGTL	3	80	N/A	N/A	N/A	N/A	N/A	N/A	6	0
	NO	34070-9313	80	G	0	34566-0703	34565-0003	34571-0301	334670102	Au	18	TXL	PGTL	1	80	N/A	N/A	N/A	N/A	N/A	N/A	3	0
H30	NO	34330-9313	80	G	0	34566-0703	34565-0003	34571-0301	334670104	Au	18	TXL	LPD	1	40	N/A	N/A	N/A	N/A	N/A	N/A	3	1
	NO	34333-9313	80	G	0	34566-0703	34565-0003	34571-0301	334670105	Au	18	PTFE	PGTL	1	80	N/A	N/A	N/A	N/A	N/A	N/A	3	0
	NO	34333-9333	80	G	0	34566-0703	34565-0003	34571-0301	334670106	Au	18	PTFE	PGTL	3	80	N/A	N/A	N/A	N/A	N/A	N/A	6	0
	NO	34070-9934	73	A	0	34566-0103	34565-0003	34571-0101	334670203	Ag	18	TXL	PGTL	3	72	343670005	14	TXL	PGTL	3	1	6	0
	NO	34070-9834	73	B	0	34566-0203	34565-0003	34571-0101	334670203	Ag	18	TXL	PGTL	3	72	343670005	14	TXL	PGTL	3	1	6	0
	NO	34070-9914	73	A	0	34566-0103	34565-0003	34571-0101	334670202	Ag	18	TXL	PGTL	1	72	343670005	14	TXL	PGTL	3	1	3	0
	NO	34070-9814	73	B	0	34566-0203	34565-0003	34571-0101	334670202	Ag	18	TXL	PGTL	1	72	343670005	14	TXL	PGTL	3	1	3	0
	NO	34070-9234	80	H	0	34566-0803	34565-0003	34571-0301	334670203	Ag	18	TXL	PGTL	3	80	N/A	N/A	N/A	N/A	N/A	N/A	6	0
	NO	34070-9214	80	H	0	34566-0803	34565-0003	34571-0301	334670202	Ag	18	TXL	PGTL	1	80	N/A	N/A	N/A	N/A	N/A	N/A	3	0
	YES	34330-9914	73	A	0	34566-0103	34565-0003	N/A	334670204	Ag	18	TXL	LPD	1	36	343670005	14	TXL	LPD	3	1	3	1
	YES	34330-9814	73	B	0	34566-0203	34565-0003	N/A	334670204	Ag	18	TXL	LPD	1	36	343670005	14	TXL	LPD	3	1	3	1
H30	YES	34330-9214	80	H	0	34566-0803	34565-0003	34571-0301	334670204	Ag	18	TXL	LPD	1	40	N/A	N/A	N/A	N/A	N/A	N/A	3	1
	NO	34070-9734	73	C	0	34566-0303	34565-0003	34571-0101	334670203	Ag	18	TXL	PGTL	3	72	343670005	14	TXL	PGTL	3	1	6	0
	NO	34070-9714	73	C	0	34566-0303	34565-0003	34571-0101	334670202	Ag	18	TXL	PGTL	1	72	343670005	14	TXL	PGTL	3	1	3	0
	NO	34330-9714	73	C	0	34566-0303	34565-0003	N/A	334670204	Ag	18	TXL	LPD	1	36	343670005	14	TXL	LPD	3	1	3	1
	NO	34070-9334	80	G	0	34566-0703	34565-0003	34571-0301	334670203	Ag	18	TXL	PGTL	3	80	N/A	N/A	N/A	N/A	N/A	N/A	6	0
	NO	34070-9314	80	G	0	34566-0703	34565-0003	34571-0301	334670202	Ag	18	TXL	PGTL	1	80	N/A	N/A	N/A	N/A	N/A	N/A	3	0
H30	NO	34330-9314	80	G	0	34566-0703	34565-0003	N/A	334670204	Ag	18	TXL	LPD	1	40	N/A	N/A	N/A	N/A	N/A	N/A	3	1
	NO	34070-9414	73	F	0	34566-0603	34565-0003	34571-0101	334670204	Ag	18	TXL	PGTL	1	72	343670001	14	TXL	PGTL	1	1	3	0
	NO	34070-9434	73	F	0	34566-0603	34565-0003	34571-0101	334670204	Ag	18	TXL	PGTL	3	72	343670005	14	TXL	PGTL	3	1	6	0
	NO	34333-9734	73	C	0	34566-0303	34565-0003	34571-0101	334670206	Ag	18	PTFE	PGTL	3	72	343670006	14	PTFE	PGTL	3	1	6	0

THIS DRAWING CONTAINS INFORMATION THAT IS PROPRIETARY TO MOLEX ELECTRONIC TECHNOLOGIES, LLC AND SHOULD NOT BE USED WITHOUT WRITTEN PERMISSION

SYMBOLS: = 0 (A) = 0 (E) = 0 (F) = 0 (S) = 0 = 0 (C) = 0 = 0 = 0 = 0

DIMENSION UNITS: MM
SCALE
GENERAL TOLERANCES (UNLESS SPECIFIED)
ANGULAR TOL ± °
4 PLACES ±
3 PLACES ±
2 PLACES ±
1 PLACE ±
0 PLACES ±
DRAFT WHERE APPLICABLE MUST REMAIN WITHIN DIMENSIONS

CURRENT REV DESC:

EC NO: 605052
DRWN: HKLIANG 2018/09/27
CHK'D: JDENG02 2018/10/10
APPR: JDENG02 2018/10/10

INITIAL REVISION:
DRWN: TYE 2016/05/06
APPR: SKRAJENDRANA 2016/08/22

THIRD ANGLE PROJECTION
DRAWING: D-SIZE
SERIES: 34566

molex

MX123
66/73/80CKT HRNS CONN ASSY

PRODUCT CUSTOMER DRAWING

DOCUMENT NUMBER	DOC TYPE	DOC PART	REVISION
SD-34566-001	PSD	000	G63

MATERIAL NUMBER	CUSTOMER	SHEET NUMBER
SEE TABLE	GENERAL MARKET	6 OF 8

DOCUMENT STATUS	P1	RELEASE DATE	2018/10/10 03:26:09

HRNS ASSY COMPONENT LIST

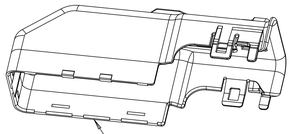

DRESS COVER
MATERIAL #: SEE HRNS ASSY TABLE

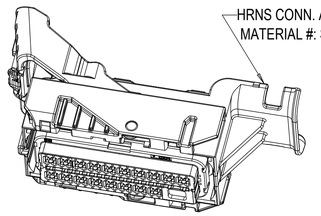

HRNS CONN. ASSY
MATERIAL #: SEE HRNS ASSY TABLE

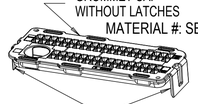

GROMMET CAP
WITHOUT LATCHES
MATERIAL #: SEE HRNS ASSY TABLE

LATCHES
NEED TO BE BROKEN OFF

ISO WIRE HRNS ASSY TABLE

TESTED	HRNS ASSY				HRNS CONN ASSY	DRESS COVER	GROMMET CAP	MX64 WIRE ASSY PER E-33468-001							2.8mm YESC SEALED FEMALE TERMINAL TIN						TY-RAP	RUBBER BAND
	MATERIAL #	CIRCUIT ID	KEY OPTION	WIRE DRESS OPTION	MATERIAL #	MATERIAL #	MATERIAL #	MATERIAL #	RCPT PLATING	WIRE SIZE mm²	WIRE TYPE	PIGTAIL OR LOOPED	"LMX" IN METERS 10%	QTY	MATERIAL #	WIRE SIZE # mm²	WIRE TYPE	PIGTAIL OR LOOPED	"LMX" IN METERS 10%	QTY	QTY	QTY
NO	2047789931	73	A	0	34566-0103	34565-0003	34571-0101	2047801003	Ag	0.35	ISO	PGTL	3	72	2047811003	2	ISO	PGTL	3	1	6	0
NO	2047789831	73	B	0	34566-0203	34565-0003	34571-0101	2047801003	Ag	0.35	ISO	PGTL	3	72	2047811003	2	ISO	PGTL	3	1	6	0
NO	2047789731	73	C	0	34566-0303	34565-0003	34571-0101	2047801003	Ag	0.35	ISO	PGTL	3	72	2047811003	2	ISO	PGTL	3	1	6	0
NO	2047789431	73	F	0	34566-0603	34565-0003	34571-0101	2047801003	Ag	0.35	ISO	PGTL	3	72	2047811003	2	ISO	PGTL	3	1	6	0
NO	2047789932	73	A	0	34566-0103	34565-0003	34571-0101	2047802003	Ag	0.50	ISO	PGTL	3	72	2047811003	2	ISO	PGTL	3	1	6	0
NO	2047789832	73	B	0	34566-0203	34565-0003	34571-0101	2047802003	Ag	0.50	ISO	PGTL	3	72	2047811003	2	ISO	PGTL	3	1	6	0
NO	2047789732	73	C	0	34566-0303	34565-0003	34571-0101	2047802003	Ag	0.50	ISO	PGTL	3	72	2047811003	2	ISO	PGTL	3	1	6	0
NO	2047789432	73	F	0	34566-0603	34565-0003	34571-0101	2047802003	Ag	0.50	ISO	PGTL	3	72	2047811003	2	ISO	PGTL	3	1	6	0
NO	2047789933	73	A	0	34566-0103	34565-0003	34571-0101	2047803003	Ag	0.75	ISO	PGTL	3	72	2047811003	2	ISO	PGTL	3	1	6	0
NO	2047789833	73	B	0	34566-0203	34565-0003	34571-0101	2047803003	Ag	0.75	ISO	PGTL	3	72	2047811003	2	ISO	PGTL	3	1	6	0
NO	2047789733	73	C	0	34566-0303	34565-0003	34571-0101	2047803003	Ag	0.75	ISO	PGTL	3	72	2047811003	2	ISO	PGTL	3	1	6	0
NO	2047789433	73	F	0	34566-0603	34565-0003	34571-0101	2047803003	Ag	0.75	ISO	PGTL	3	72	2047811003	2	ISO	PGTL	3	1	6	0
NO	2047799911	73	A	0	34566-0103	34565-0003	34571-0101	2047801101	Ag	0.35	ISO	LPD	1	72	2047811101	2	ISO	LPD	1	1	3	0
NO	2047799811	73	B	0	34566-0203	34565-0003	34571-0101	2047801101	Ag	0.35	ISO	LPD	1	72	2047811101	2	ISO	LPD	1	1	3	0
NO	2047799711	73	C	0	34566-0303	34565-0003	34571-0101	2047801101	Ag	0.35	ISO	LPD	1	72	2047811101	2	ISO	LPD	1	1	3	0
NO	2047799411	73	F	0	34566-0603	34565-0003	34571-0101	2047801101	Ag	0.35	ISO	LPD	1	72	2047811101	2	ISO	LPD	1	1	3	0
NO	2047799912	73	A	0	34566-0103	34565-0003	34571-0101	2047802101	Ag	0.50	ISO	LPD	1	72	2047811101	2	ISO	LPD	1	1	3	0
NO	2047799812	73	B	0	34566-0203	34565-0033	34571-0101	2047802101	Ag	0.50	ISO	LPD	1	72	2047811101	2	ISO	LPD	1	1	3	0
NO	2047799712	73	C	0	34566-0303	34565-0033	34571-0101	2047802101	Ag	0.50	ISO	LPD	1	72	2047811101	2	ISO	LPD	1	1	3	0
NO	2047799412	73	F	0	34566-0603	34565-0003	34571-0101	2047802101	Ag	0.50	ISO	LPD	1	72	2047811101	2	ISO	LPD	1	1	3	0
NO	2047799913	73	A	0	34566-0103	34565-0003	34571-0101	2047803101	Ag	0.75	ISO	LPD	1	72	2047811101	2	ISO	LPD	1	1	3	0
NO	2047799813	73	B	0	34566-0203	34565-0003	34571-0101	2047803101	Ag	0.75	ISO	LPD	1	72	2047811101	2	ISO	LPD	1	1	3	0
NO	2047799713	73	C	0	34566-0303	34565-0003	34571-0101	2047803101	Ag	0.75	ISO	LPD	1	72	2047811101	2	ISO	LPD	1	1	3	0
NO	2047799413	73	F	0	34566-0603	34565-0003	34571-0101	2047803101	Ag	0.75	ISO	LPD	1	72	2047811101	2	ISO	LPD	1	1	3	0
NO	2047789333	80	G	0	34566-0703	34565-0003	34571-0301	2047803003	Ag	0.75	ISO	PGTL	3	80	N/A	N/A	N/A	N/A	N/A	N/A	6	0
NO	2047789233	80	H	0	34566-0803	34565-0003	34571-0301	2047803003	Ag	0.75	ISO	PGTL	3	80	N/A	N/A	N/A	N/A	N/A	N/A	6	0

RUBBER BAND
DESCRIPTION: #84 3.5" X 0.5"

SUGGESTED SOURCE:
MANUFACTURER: ALLIANCE
PART #: 987-370
VENDOR: OFFICE DEPOT
VENDOR #: 109099

TY-RAP
DESCRIPTION: SIZE TY25 CABLE TIE

SUGGESTED SOURCE:
MANUFACTURER: THOMAS & BETTS
PART #: TY25M
VENDOR: CRESENT ELEC
VENDOR #: 104144

PRODUCTION PART # FOR HARNESS ASSEMBLY (WITH WIRES) XXXXX-KKLW

XXXXXX- SERIES NUMBER			
SERIES #	CKT SIZE	WIRE TYPE	WIRE DRESS
204778	80/73/66	ISO*	PGTL
204779	80/73/66	ISO*	LPD

KK- HARNESS CONNECTOR KEY	
#	73/80 KEY
99	A
98	B
97	C
96	D
95	E
94	F
93	G
92	H
91	J
90	K
89	L
88	M
#	66 KEY
87	A
86	B
85	C

H13

L - MX64 CRIMPED LEAD WIRE LENGTH (m)

W - MX64 CRIMPED LEAD WIRE WIDTH (mm²)
1 - 0.35
2 - 0.50
3 - 0.75

HRNS ASSY

MX64 WIRE ASSY LOOPED
MATERIAL #: SEE HRNS ASSY TABLE

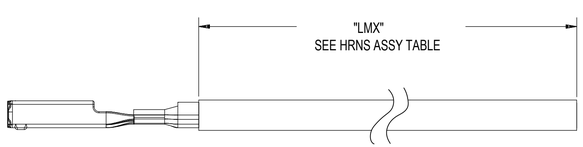

MX64 WIRE ASSY PIGTAIL
MATERIAL #: SEE HRNS ASSY TABLE

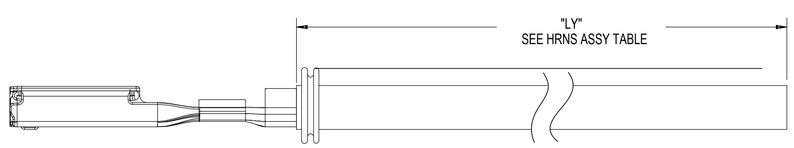

2.8mm YESC SEALED FEMALE PIGTAIL ASSY
MATERIAL #: SEE HRNS ASSY TABLE

NOTES: UNLESS OTHERWISE SPECIFIED APPLIES TO "HRNS ASSY" ONLY

1. REFER TO: PACKAGING DRAWING # PK-31300-078
2. FOR HRNS ASSY WITH WIRE ASSY SEE NEXT PAGE

SYMBOLS	
= 0	
= 0	
= 0	
= 0	
= 0	
= 0	
= 0	
= 0	
= 0	

DIMENSION UNITS: MM
SCALE
GENERAL TOLERANCES (UNLESS SPECIFIED)
ANGULAR TOL ± °
4 PLACES ±
3 PLACES ±
2 PLACES ±
1 PLACE ±
0 PLACES ±
DRAFT WHERE APPLICABLE MUST REMAIN WITHIN DIMENSIONS

THIS DRAWING CONTAINS INFORMATION THAT IS PROPRIETARY TO MOLEX ELECTRONIC TECHNOLOGIES, LLC AND SHOULD NOT BE USED WITHOUT WRITTEN PERMISSION

CURRENT REV DESC:

EC NO: 605052
DRWN: HKLIANG 2018/09/27
CHK'D: JDENG02 2018/10/10
APPR: JDENG02 2018/10/10

INITIAL REVISION:
DRWN: TYE 2016/05/06
APPR: SKRAJENDRANA 2016/08/22

molex

MX123
66/73/80CKT HRNS CONN ASSY

PRODUCT CUSTOMER DRAWING

DOCUMENT NUMBER	DOC TYPE	DOC PART	REVISION
SD-34566-001	PSD	000	G63

THIRD ANGLE PROJECTION	DRAWING	SERIES	MATERIAL NUMBER	CUSTOMER	SHEET NUMBER
	D-SIZE	34566	SEE TABLE	GENERAL MARKET	7 OF 8

DOCUMENT STATUS	P1	RELEASE DATE	2018/10/10 03:26:09

ISO WIRE HRNS ASSY TABLE

TESTED	HRNS ASSY				HRNS CONN ASSY	DRESS COVER	GROMMET CAP	MX64 WIRE ASSY PER E-33468-001							2.8mm YESC SEALED FEMALE TERMINAL TIN						TY-RAP	RUBBER BAND
	MATERIAL #	CIRCUIT ID	KEY OPTION	WIRE DRESS OPTION	MATERIAL #	MATERIAL #	MATERIAL #	MATERIAL #	RCPT PLATING	WIRE SIZE # mm²	WIRE TYPE	PIGTAIL OR LOOPED	"LMX" IN METERS 10%	QTY	MATERIAL #	WIRE SIZE # mm²	WIRE TYPE	PIGTAIL OR LOOPED	"LMX" IN METERS 10%	QTY	QTY	QTY
NO	2047789331	80	G	0	34566-0703	34565-0003	34571-0301	2047801003	Ag	0.35	ISO	PGTL	3	80	2047811003	2	ISO	PGTL	3	N/A	6	0
NO	2047789231	80	H	0	34566-0803	34565-0003	34571-0301	2047801003	Ag	0.35	ISO	PGTL	3	80	2047811003	2	ISO	PGTL	3	N/A	6	0
NO	2047789332	80	G	0	34566-0703	34565-0003	34571-0301	2047802003	Ag	0.50	ISO	PGTL	3	80	2047811003	2	ISO	PGTL	3	N/A	6	0
NO	2047789232	80	H	0	34566-0803	34565-0003	34571-0301	2047802003	Ag	0.50	ISO	PGTL	3	80	2047811003	2	ISO	PGTL	3	N/A	6	0
NO	2047789333	80	G	0	34566-0703	34565-0003	34571-0301	2047803003	Ag	0.75	ISO	PGTL	3	80	2047811003	2	ISO	PGTL	3	N/A	6	0
NO	2047789233	80	H	0	34566-0803	34565-0003	34571-0301	2047803003	Ag	0.75	ISO	PGTL	3	80	2047811003	2	ISO	PGTL	3	N/A	6	0
NO	2047799311	80	G	0	34566-0703	34565-0003	N/A	2047801101	Ag	0.35	ISO	LPD	1	80	2047811101	2	ISO	LPD	1	N/A	3	0
NO	2047799211	80	H	0	34566-0803	34565-0003	N/A	2047801101	Ag	0.35	ISO	LPD	1	80	2047811101	2	ISO	LPD	1	N/A	3	0
NO	2047799312	80	G	0	34566-0703	34565-0003	N/A	2047802101	Ag	0.50	ISO	LPD	1	80	2047811101	2	ISO	LPD	1	N/A	3	0
NO	2047799212	80	H	0	34566-0803	34565-0003	N/A	2047802101	Ag	0.50	ISO	LPD	1	80	2047811101	2	ISO	LPD	1	N/A	3	0
NO	2047799313	80	G	0	34566-0703	34565-0003	N/A	2047803101	Ag	0.75	ISO	LPD	1	80	2047811101	2	ISO	LPD	1	N/A	3	0
NO	2047799213	80	H	0	34566-0803	34565-0003	N/A	2047803101	Ag	0.75	ISO	LPD	1	80	2047811101	2	ISO	LPD	1	N/A	3	0
NO	2047789931	66	A	0	34822-0013	34565-0003	34822-5011	2047801003	Ag	0.35	ISO	PGTL	3	64	2047811003	2	ISO	PGTL	3	2	6	0
NO	2047789731	66	C	0	34822-0033	34565-0003	34822-5011	2047801003	Ag	0.35	ISO	PGTL	3	64	2047811003	2	ISO	PGTL	3	2	6	0
NO	2047789932	66	A	0	34822-0013	34565-0003	34822-5011	2047802003	Ag	0.50	ISO	PGTL	3	64	2047811003	2	ISO	PGTL	3	2	6	0
NO	2047789732	66	C	0	34822-0033	34565-0003	34822-5011	2047802003	Ag	0.50	ISO	PGTL	3	64	2047811003	2	ISO	PGTL	3	2	6	0
NO	2047789933	66	A	0	34822-0013	34565-0003	34822-5011	2047803003	Ag	0.75	ISO	PGTL	3	64	2047811003	2	ISO	PGTL	3	2	6	0
NO	2047789733	66	C	0	34822-0033	34565-0003	34822-5011	2047803003	Ag	0.75	ISO	PGTL	3	64	2047811003	2	ISO	PGTL	3	2	6	0
NO	2047799911	66	A	0	34822-0013	34565-0003	N/A	2047801101	Ag	0.35	ISO	LPD	1	64	2047811101	2	ISO	LPD	1	2	3	0
NO	2047799711	66	C	0	34822-0033	34565-0003	N/A	2047801101	Ag	0.35	ISO	LPD	1	64	2047811101	2	ISO	LPD	1	2	3	0
NO	2047799912	66	A	0	34822-0013	34565-0003	N/A	2047802101	Ag	0.50	ISO	LPD	1	64	2047811101	2	ISO	LPD	1	2	3	0
NO	2047799712	66	C	0	34822-0033	34565-0003	N/A	2047802101	Ag	0.50	ISO	LPD	1	64	2047811101	2	ISO	LPD	1	2	3	0
NO	2047799913	66	A	0	34822-0013	34565-0003	N/A	2047803101	Ag	0.75	ISO	LPD	1	64	2047811101	2	ISO	LPD	1	2	3	0
NO	2047799713	66	C	0	34822-0033	34565-0003	N/A	2047803101	Ag	0.75	ISO	LPD	1	64	2047811101	2	ISO	LPD	1	2	3	0

SYMBOLS
A = 0
E = 0
F = 0
S = 0
= 0
C = 0
= 0
= 0
V = 0

DIMENSION UNITS: MM
SCALE
GENERAL TOLERANCES (UNLESS SPECIFIED)
ANGULAR TOL ± °
4 PLACES ±
3 PLACES ±
2 PLACES ±
1 PLACE ±
0 PLACES ±
DRAFT WHERE APPLICABLE MUST REMAIN WITHIN DIMENSIONS

THIS DRAWING CONTAINS INFORMATION THAT IS PROPRIETARY TO MOLEX ELECTRONIC TECHNOLOGIES, LLC AND SHOULD NOT BE USED WITHOUT WRITTEN PERMISSION

CURRENT REV DESC:

EC NO: 605052
DRWN: HKLIANG 2018/09/27
CHK'D: JDENG02 2018/10/10
APPR: JDENG02 2018/10/10

INITIAL REVISION:
DRWN: TYE 2016/05/06
APPR: SKRAJENDRANA 2016/08/22

THIRD ANGLE PROJECTION
DRAWING: D-SIZE
SERIES: 34566

molex

MX123
66/73/80CKT HRNS CONN ASSY

PRODUCT CUSTOMER DRAWING

DOCUMENT NUMBER	DOC TYPE	DOC PART	REVISION
SD-34566-001	PSD	000	G63

MATERIAL NUMBER	CUSTOMER	SHEET NUMBER
SEE TABLE	GENERAL MARKET	8 OF 8

DOCUMENT STATUS	P1	RELEASE DATE	2018/10/10 03:26:09