Part Number: 0638134100
Status: Active
Overview: Application Tooling
Description: Extractor Tool for 5-Way Male Housing

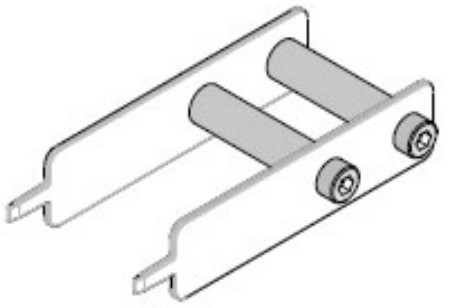

Series image - Reference only

Documents:
RoHS Certificate of Compliance (PDF)

General

Product Family	Application Tooling
Series	207121
Comments	See Tooling Specification (PDF) Above
Function	Extraction
Geographic Area	Global
Level of Automation	Manual
More Detailed Tech Information	applicationtooling@molex.com
Overview	Application Tooling
Product Name	N/A
Tool Type	Extraction Hand Tool
UPC	884982002937
Warranty Disclaimer	CAUTION: Molex tooling crimp specifications are valid only when used with Molex terminals and tooling manufactured by Molex and sold by Molex or authorized distributors ("Molex Tooling"). When using tooling other than Molex Tooling with Molex specific connector systems listed in our ATS documents, the Molex tooling qualification does not apply and the responsibility for full qualification of the connector system is that of the customer. Molex accepts no liability for connector performance or tooling support where tooling other than Molex Tooling is used or where Molex Tooling is modified.

Material Info

Reference - Drawing Numbers

Application Tooling Documents	ATS-638134100-001

EU ELV
Not Relevant

EU RoHS
Not Reviewed

China RoHS

REACH SVHC
Not Reviewed

Halogen-Free Status
Not Relevant

For more information, please visit Contact US

China ROHS	Not Relevant
ELV	Not Relevant
RoHS Phthalates	Not Reviewed

Search Parts in this Series
207121 Series

Use With
98781 5-Way Shunt Male Housing (5 Circuits)

Application Tooling | **FAQ**

Description	Product #
PIN HSG SHNT SHORT VER GRN 5CKT	987810013
PIN HSG SHNT SHORT VER BLU 5CKT	987810014