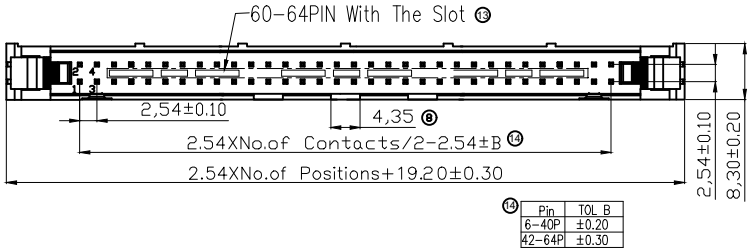

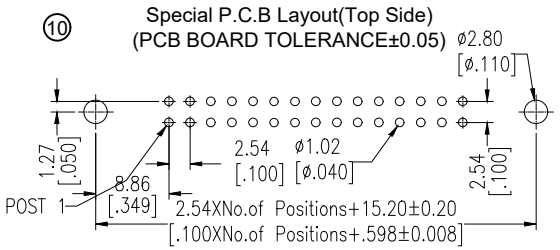

NOTES:

MATERIAL
1.Insulator Material:PBT+30%G.F,(UL94V-0), Grey
2.Contact Material : Brass
⑧ 3.Contact Plating : Gold Flash / Tin or Full Tinned Over Ni

ELECTRICAL
1.Current Rating : 3.0AMP
2.Withstand Voltage : 1000V AC/minute
3.Contact Resistance : 20mΩ max
4.Insulation Resistance: 1000MΩ min

ENVIRONMENTAL
⑦ 1.Operation Temperature: -40°C to +105°C
2.Soldering Temperature:235°C±5°C/5s±1s
3.Packing : Tray
⑬ 4.Without side slot "A" and "B" for 06-18P
Without side slot "A" and with slot "B" for 20-58P
With slot "A" and "B" for 60-64P

⑨ Ordering Information

AWH xxG-0xx2-T

③ No. of Contacts
06 08
10 12
14 16
18 20
24 26
30 34
40 50
60 64

2: Gold Flash /Tinned
5: Full Tinned

Latch Type
0(w/o latch)
2(with short latch)
3(with long latch)

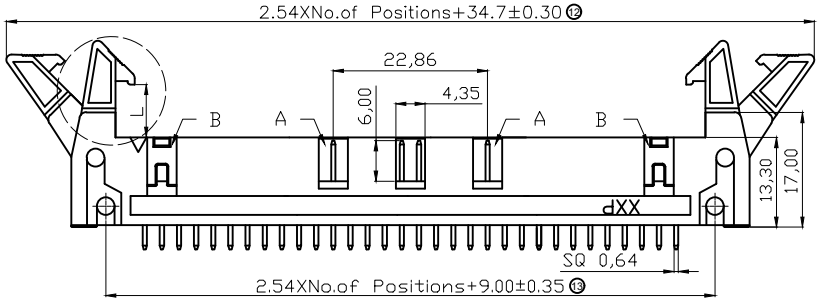

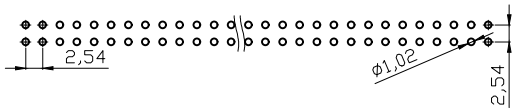

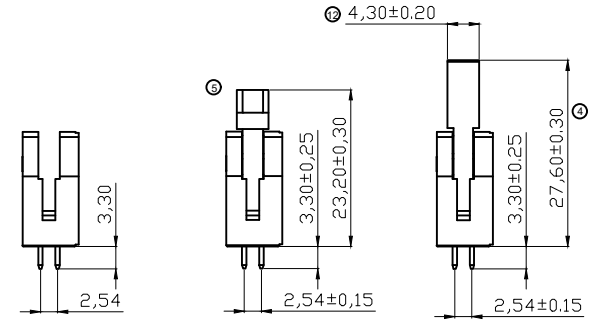

without Latch
with short Latch
with long Latch

Dimension L

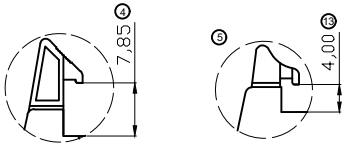

Long Latch
Short Latch

RoHS compliant
Unit: mm

⑨ File No.: E198287

Scale	Free
TOLERANCE	
X.X	±0.40
X.XX	±0.25
X.XXX	±0.15
Angle	±3°

Id.	Modification	Date	Name
⑭	Update tolerance	11.02.2022	Daniel
⑬	Update tolerance and notes	28.01.2019	Xavier
⑫	Update the dimension	06.04.2017	Winnie
⑪	Add the dimension	29.04.2015	Winnie
⑩	Add special PCB layout	13.10.2014	Ray
⑨	Add UL file no.	12.12.2013	Amy

	Date	Name
Drawn	25.01.2006	Alex
Approved	11.02.2022	Daniel

ASSMANN WSW components

Customer-No.

ASSMANN WSW-No.
AWH xxG-0xx2-T

Drawing-No.
ASS 2310 CO

rev14

Replace

Sheet
1/1