XC9274/XC9275 Series

ETR05056-004a

HiSAT-COT® Control 3.0A Synchronous Step-Down DC/DC Converters

☆Green Operation-compatible

■GENERAL DESCRIPTION

The XC9274/XC9275 series is a group of synchronous-rectification type DC/DC converters with a built-in 51mΩ P-channel MOS driver transistor and 49mΩ N-channel MOS switching transistor, designed to allow the use of ceramic capacitors. The small on-resistances of these two internal driver transistors enable a high efficiency, stable power supply with an output current up to 3.0A. A 0.6V reference voltage source is incorporated, and the output voltage can be set freely by external resistors. Oscillation frequency is set to 1.2MHz or 3.0MHz can be selected for suiting to your particular application. The operation mode is HISAT-COT(*) control , which has an excellent transient response, the XC9274 series is PWM control, the XC9275 series is PWM/PFM auto switching control, allowing fast response, low ripple, and high efficiency over the full range of loads (from light loads to heavy loads).

During stand-by, all circuits are shutdown to reduce current consumption to as low as 1.0μA or less. As for the soft-start function as fast as 0.25ms in typical for quick turn-on. Internal protection circuits include over current protection, short-circuit protection, and thermal shutdown circuits to enable safe use. Short-circuit protection is available only for B,C type. Hiccup mode is available only for D,E type. Soft-off function is available only for B, D type. The package is the SOP-8FD.

(*) HiSAT-COT is a proprietary high-speed transient response technology for DC/DC converter which was developed by Torex. It is Ideal for the LSI's that require high precision and high stability power supply voltage

■APPLICATIONS

- PC
- Graphic board
- Storage
- Industrial application
- FPGA
- SSD
- ASIC
- DSP

■FEATURES

Input Voltage Range	:	2.7V ~ 5.5V
Output Voltage Range	:	XC9274 : 0.6V ~ 3.6V XC9275 : 0.8V ~ 3.6V
FB Voltage	:	0.6V ± 1.0%
Output Current	:	3.0A
Oscillation Frequency	:	1.2MHz, 3.0MHz
Efficiency	:	95% (V_{IN}=5.0V, V_{OUT}=3.3V, I_{OUT}=1.0A)
Control Methods	:	HiSAT-COT® Control
	:	100% Duty Cycle
	:	PWM Control (XC9274)
	:	PWM/PFM auto switching Control (XC9275)
Protection Functions	:	Thermal Shutdown
	:	Current Limit (Pendent character)
	:	HICCUP (D,E Type)
		Short Circuit Protection (B,C Type)
Functions	:	UVLO, Soft-Start
	:	Soft-off (B,D Type)
	:	C_L High Speed Discharge, Power good
Output Capacitor	:	Ceramic Capacitor
Operating Ambient Temperature	:	-40℃ ~ 105℃
Package	:	SOP-8FD
Environmentally Friendly	:	EU RoHS Compliant, Pb Free

■TYPICAL APPLICATION CIRCUIT

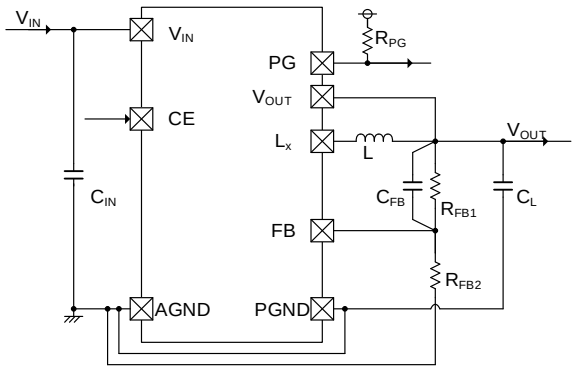

■TYPICAL PERFORMANCE CHARACTERISTICS

V_{OUT}=3.3V, fosc=1.2MHz L=0.82μH(MWSA6030),C_{IN}=47μF(GRM31CR61A476ME15L)
C_L=47μF(GRM31CR60J476ME19L),R_{FB1}=68kΩ,R_{FB2}=15kΩ,C_{FB}=820pF

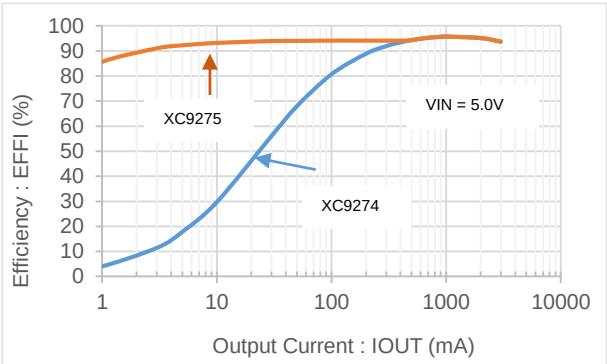

■BLOCK DIAGRAM

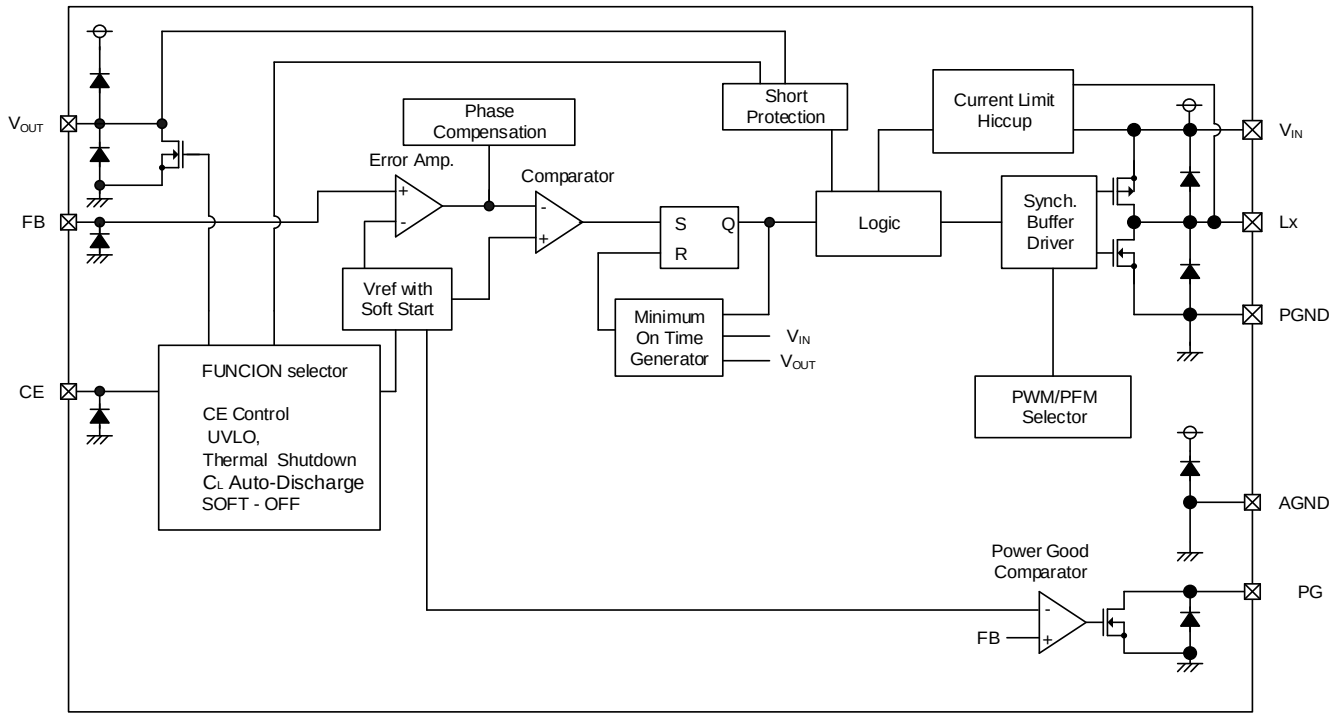

* In the XC9274 series "PWM / PFM Selector" is fixed to PWM control.
In the XC9275 series "PWM / PFM Selector" is fixed to PWM / PFM automatic switching control.
For Hiccup, Short Protection, Soft-off, the available functions are different for each product type.
Please refer to Selection Guide for functions available for each product type.
Diodes inside the circuit are an ESD protection diode and a parasitic diode.

■PRODUCT CLASSIFICATION

1) Ordering Information

XC9274①②③④⑤⑥-⑦ PWM Control
XC9275①②③④⑤⑥-⑦ PWM/PFM Automatic switching control

DESIGNATOR	ITEM	SYMBOL	DESCRIPTION
①	Type	B	Refer to Selection Guide
		C	
		D	
		E	
②③	Adjustable Output Voltage	06	Output voltage can be adjustable. XC9274 : 0.6V ~ 3.6V XC9275 : 0.8V ~ 3.6V
④	Oscillation Frequency	C	1.2MHz
		D	3.0MHz
⑤⑥−⑦ (*1)	Package (Order Unit)	QR-G	SOP-8FD (1,000pcs/Reel)

(*1) The "-G" suffix denotes Halogen and Antimony free as well as being fully EU RoHS compliant.

2) Selection Guide

TYPE	Short Protection with Latch	Hiccup Mode	C_L Auto-Discharge	SOFT-OFF	UVLO
B	Yes	No	Yes	Yes	Yes
C	Yes	No	Yes	No	Yes
D	No	Yes	Yes	Yes	Yes
E	No	Yes	Yes	No	Yes

TYPE	CHIP ENABLE	CURRENT LIMT	SOFT-START TIME	THERMAL SHUTDOWN	POWER GOOD
B	Yes	Yes	Fixed	Yes	Yes
C	Yes	Yes	Fixed	Yes	Yes
D	Yes	Yes	Fixed	Yes	Yes
E	Yes	Yes	Fixed	Yes	Yes

■PIN CONFIGURATION

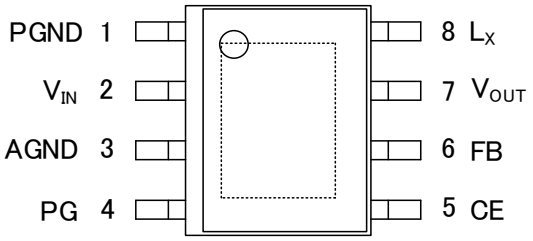

SOP-8FD
(TOP VIEW)

* The dissipation pad for the SOP-8FD package should be solder-plated in recommended mount pattern and metal masking so as to enhance mounting strength and heat release. If the pad needs to be connected to other pins, it should be connected to the GND (No.1,3) pin.

■PIN ASSIGNMEN

PIN NUMBER	PIN NAME	FUNCTIONS
1	PGND	Power Ground
2	V_{IN}	Power Input
3	AGND	Analog Ground
4	PG	Power-good Output
5	CE	Chip Enable
6	FB	Output Voltage Sense
7	V_{OUT}	Output Voltage Sense
8	L_X	Switching Output

■FUNCTION

PIN NAME	SIGNAL	STATUS
CE	L	Stand-by
	H	Active

Please do not leave the CE pin open.

■ABSOLUTE MAXIMUM RATINGS

PARAMETER		SYMBOL	RATINGS	UNITS
Power Input Voltage		V_{IN}	-0.3 ~ 6.2	V
Lx PIN Voltage		V_{Lx}	-0.3 ~ V_{IN} + 0.3 or 6.2(*1)	V
Output Voltage		V_{OUT}	-0.3 ~ V_{IN} + 0.3 or 4.0(*2)	V
Feedback Input Voltage		V_{FB}	-0.3 ~ 6.2	V
CE Input Voltage		V_{CE}	-0.3 ~ 6.2	V
PG Input Voltage		V_{PG}	-0.3 ~ 6.2	V
Power Dissipation (Ta=25℃)	SOP-8FD	Pd	1500 (40mm x 40mm Standard board) (*3)	mW
			2500 (JESD51-7 board) (*3)	
Operating Ambient Temperature		Topr	-40 ~ 105	℃
Storage Temperature		Tstg	-55 ~ 125	℃

All voltages are described based on the GND (AGND and PGND) pin.

Connect AGND and PGND to the same potential.

(*1) The maximum value should be either V_{IN}+0.3V or 6.2V in the lowest.

(*2) The maximum value should be either V_{IN}+0.3V or 4.0V in the lowest.

(*3) The power dissipation figure shown is PCB mounted. Please see the power dissipation page for the mounting condition.

■ELECTRICAL CHARACTERISTICS

Ta=25℃

PARAMETER	SYMBOL	CONDITIONS		MIN.	TYP.	MAX.	UNITS	CIRCUIT
Feedback Voltage	V_{FB}	V_{IN}=5.0V, V_{CE}=V_{IN}, Voltage to start oscillation while V_{FB}=0.66V→0.54V	Ta=25℃	0.594	0.600	0.606	V	④
			Ta=0℃～85℃(*9)	0.594	0.600	0.606	V	
			Ta=-40℃～105℃(*9)	0.591	0.600	0.609	V	
Load Regulation	$\Delta V_{LOADREG}$	V_{IN}=5.0V, V_{OUT}=1.8V, I_{OUT}= 0A~3.0A	XC9274	-	0.13	-	%	①
		V_{IN}=5.0V, V_{OUT}=1.8V, I_{OUT} = 800mA~3.0A (*10)	XC9275					
Operating Voltage Range	V_{IN}			2.7	-	5.5	V	①
Setting Output Voltage Range	V_{OUTSET}		XC9274	0.6	-	3.6	V	①
			XC9275	0.8		3.6		
Maximum Output Current	I_{OUTMAX}	V_{IN}=2.7V~5.5V(*1)		3.0	-	-	A	①
UVLO Voltage(*2)	V_{UVLO}	V_{CE}=V_{IN}, V_{OUT}=0.4V, V_{FB}=0.54V, Voltage which Lx pin holding "L" level(*5)		2.20	-	2.68	V	④
Quiescent Current	Iq	V_{IN}=5.0V, V_{CE}=V_{IN}, V_{OUT}=V_{FB}=0.66V	XC9274	-	1.25	2.00	mA	②
			XC9275	-	40	80	μA	
Stand-by Current	I_{STB}	V_{IN}=5.0V, V_{CE}=V_{OUT}=V_{FB}=0.0V		-	0	10	μA	②
Minimum ON time	t_{ONmin}	When connected to external components, V_{CE}=V_{IN}, V_{IN}=3.0V, V_{OUT}=1.8V I_{OUT}=1mA	1.2MHz	350	500	650	ns	①
			3.0MHz	140	200	260	ns	
Thermal shutdown	T_{TSD}	-		-	150	-	℃	①
Thermal shutdown hysteresis	T_{HYS}	-		-	20	-	℃	①
Efficiency(*3)	EFFI	V_{IN}=5.0V, V_{CE}=V_{IN}, V_{OUT}=3.3V, I_{OUT}=1.0A	1.2MHz	-	95	-	%	①
			3.0MHz	-	93	-		
Lx SW "H" ON Resistance	R_{LXH}	V_{IN}=5.0V, V_{CE}=V_{IN}, V_{OUT}=V_{FB}=0.54V I_{Lx}=100mA (*4)		-	51	89	mΩ	③
Lx SW "L" ON Resistance	R_{LXL}	V_{IN}=5.0V, V_{CE}=V_{IN}, V_{OUT}=V_{FB}=0.66V I_{Lx}=100mA (*4)		-	49	84	mΩ	③
Lx SW"H" Leakage Current(*6)	I_{LeakH}	V_{IN}= 5.5V, V_{FB}=0.66V, V_{OUT}=V_{CE}=0.0V, V_{Lx}=5.5V		-	0.0	50	μA	⑤
Lx SW"L" Leakage Current(*7)	I_{LeakL}	V_{IN}= 5.5V, V_{FB}=0.66V, V_{OUT}=V_{CE}=0.0V, V_{Lx}=0.0V		-	0.0	10	μA	⑤
Current Limit (*8)	I_{LIM}	V_{IN}=5.0V, V_{CE}=V_{IN}, V_{OUT}=V_{FB}=0.54V I_{Lx} until Lx pin oscillates		4.8	6.2	8.1	A	⑥
Output Voltage Temperature Characteristics	ΔV_{OUT}/ (V_{OUT}・ΔTopr)	I_{OUT}=30mA, -40℃≦Topr≦105℃		-	±30	-	ppm/℃	①
PG detect voltage	V_{PG}	V_{IN}=5.0V, V_{CE}=V_{IN}, V_{OUT}=0.54V PG=Pull up 10kΩ(V_{IN}), V_{FB}=0.58V→0.42V Voltage which PG pin holding "L" level(*5)		0.42	0.50	0.58	V	④
PG Output Current	I_{PG}	V_{IN}=5.0V, V_{CE}=V_{IN}, V_{OUT}=0.54V, V_{FB}=0.42V PG = 0.5V		3.6	4.5	5.5	mA	④
Soft-Start Time	t_{SS}	V_{IN}=5.0V, V_{OUT}=V_{FB}=0.54V V_{CE}=0.0V→3.6V, Time from V_{CE}=3.6V to clocks are generated at Lx pin.		0.10	0.25	0.50	ms	⑦
Soft-Off Time(*11)	t_{so}	V_{IN}=5.0V, C_L=47uF, V_{OUT}=1.8V, V_{CE}=5.0V→0.0V Time from V_{CE}=0.0V to V_{OUT}=0.2V		0.05	0.17	0.23	ms	①

■ELECTRICAL CHARACTERISTICS (Continued)

Ta=25℃

PARAMETER	SYMBOL	CONDITIONS	MIN.	TYP.	MAX.	UNITS	CIRCUIT
CL Discharge	R_{DCHG}	V_{IN}=5.0V, V_{CE}=0.0V, V_{FB}=0.66V, V_{OUT}=0.2V	-	65	130	Ω	⑧
Hiccup wait time(*12)	t_{HW}	V_{IN}=5.0V,V_{CE}=V_{IN}, V_{OUT}=0.0V, Time from the oscillation stop until the oscillation start	0.10	0.25	0.50	ms	①
CE "H" Voltage	V_{CEH}	V_{IN}=5.0V, V_{OUT}=V_{FB}=0.54V, Applied voltage to V_{CE} Voltage changes Lx to "H" level (*5)	1.4	-	5.5	V	④
CE "L" Voltage	V_{CEL}	V_{IN}=5.0V, V_{OUT}=V_{FB}=0.54V, Applied voltage to V_{CE} Voltage changes Lx to "L" level (*5)	AGND	-	0.5	V	④
CE "H" Current	I_{CEH}	V_{IN}=5.5V, V_{CE}=5.5V	-0.1	-	0.1	μA	⑤
CE "L" Current	I_{CEL}	V_{IN}=5.5V, V_{CE}=0.0V	-0.1	-	0.1	μA	⑤
Short Protection Threshold Voltage(*13)	V_{SHORT}	V_{IN}=5.0V, V_{CE}=V_{IN}, V_{FB}=0.54V, Sweeping V_{OUT}, voltage which Lx becomes "L" level (*5)	0.1	0.2	0.5	V	④

Unless otherwise stated, V_{IN}=5.0V, V_{CE}=5.0V

(*1) When the difference between the input and the output is small, 100% duty might come up and internal control circuits keep Pch MOS driver turning on even though the output current is not so large.
If current is further pulled from this state, output voltage will decrease because of Pch MOS driver ON resistance.

(*2) Including UVLO detect voltage, hysteresis operating voltage range for UVLO release voltage.

(*3) EFFI = [(output voltage × output current) ÷ (input voltage × input current)] × 100

(*4) R_{LXH}= (V_{IN} - Lx pin measurement voltage) / 100mA, R_{LXL}= Lx pin measurement voltage / 100mA

(*5) "H"=V_{IN} - 1.2V ~ V_{IN}, "L" = -0.1V ~ 0.1V

(*6) When temperature is high, a current of approximately 150μA (maximum) may leak.

(*7) When temperature is high, a current of approximately 50μA (maximum) may leak.

(*8) Current limit denotes the level of detection at peak of Pch MOS driver Tr. current.

(*9) Design value

(*10) It is a characteristic during PWM control.

(*11) Soft-Off is valid only for B, D type products.

(*12) Hiccup Mode is valid only for D,E type products.

(*13) Short Protection with Latch is valid only for B,C type products.

■TEST CIRCUITS

< Circuit No.① >

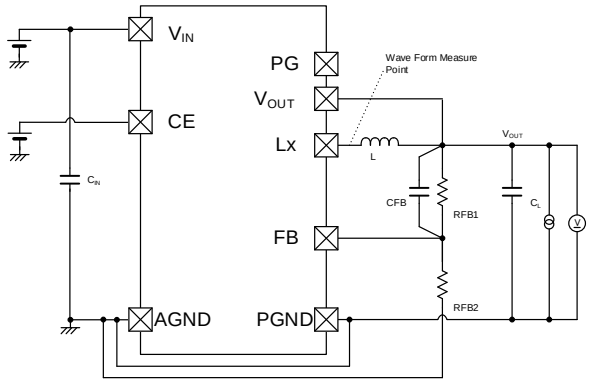

※ External Components
C_{IN} : 47μ F(ceramic)
C_L : 47μ F(ceramic)
CFB : 1500pF
RFB1 : 36kΩ
RFB2 : 18kΩ

L (fosc=1.2MHz) : 0.80μ H(XAL5030)
L (fosc=3.0MHz) : 0.22μ H(XAL4020)

< Circuit No.② >

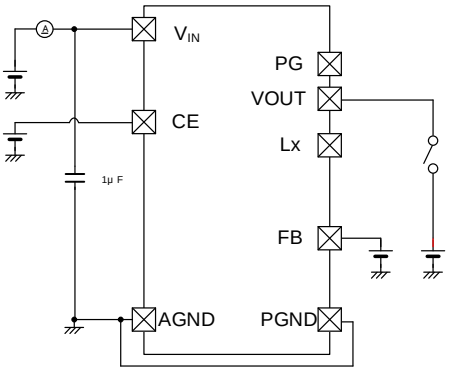

< Circuit No.③ >

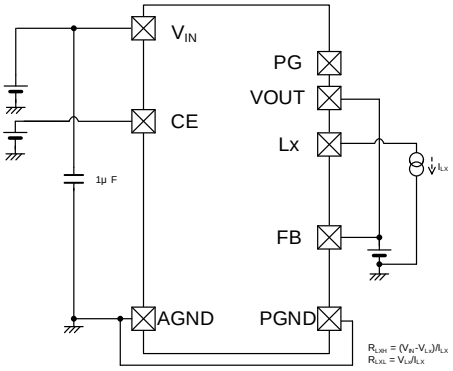

$R_{LXH} = (V_{IN}-V_{LX})/I_{LX}$
$R_{LXL} = V_{LX}/I_{LX}$

< Circuit No.④ >

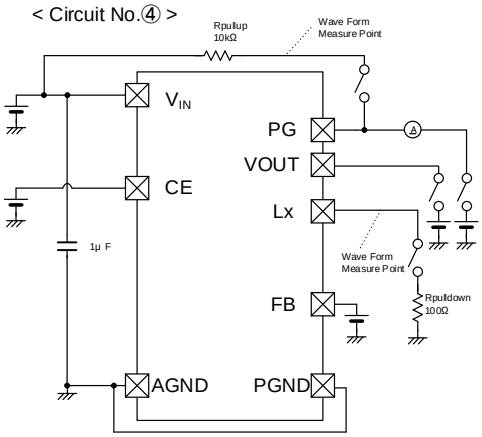

< Circuit No.⑤ >

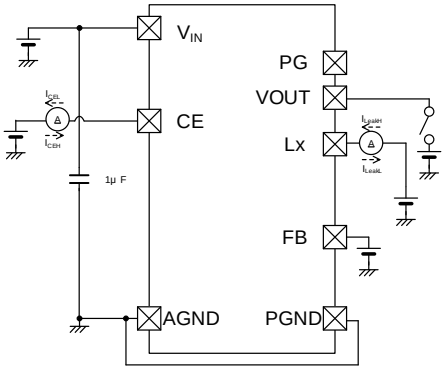

< Circuit No.⑥ >

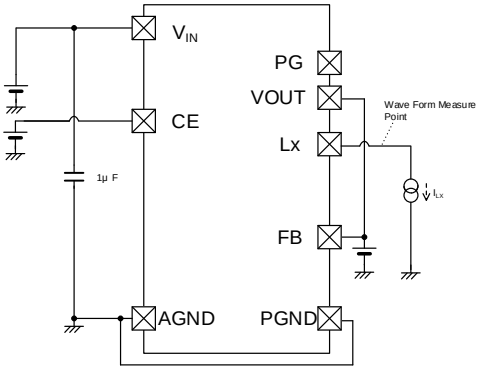

< Circuit No.⑦ >

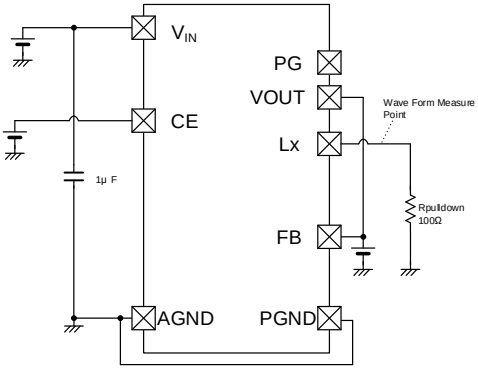

< Circuit No.⑧ >

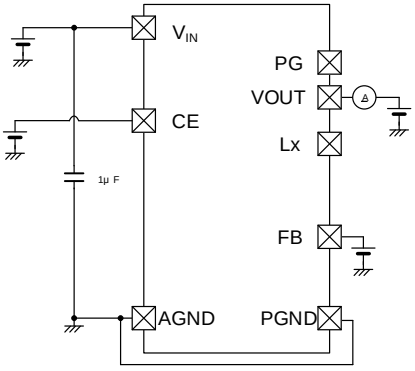

■TYPICAL APPLICATION CIRCUIT

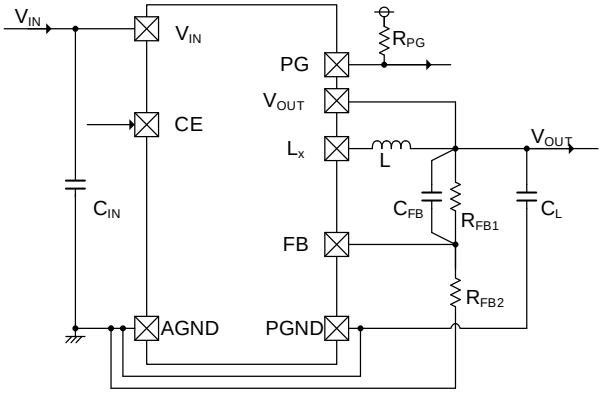

Select components appropriate to the usage conditions (ambient temperature, input & output voltage).

【Typical Examples】f_{OSC} = 1.2MHz

	MANUFACTURER	PRODUCT NUMBER	VALUE	SIZE（L×W×T）
L	Coilcraft	XAL5030-801ME	0.80μH	5.28×5.48×3.1(mm)
	Sunlord	MWSA0603-R82MT	0.82μH	6.6×7.1×3.0(mm)
	TDK	SPM4020T-1R0M	1.00μH	4.4×4.1×2.0(mm)
	TOKYO COILENGINEERING	MCP0420-1R0S	1.00μH	4.1×4.1×2.1(mm)

【Typical Examples】f_{OSC} = 3.0MHz

	MANUFACTURER	PRODUCT NUMBER	VALUE	SIZE（L×W×T）
L	Coilcraft	XAL4020-221ME	0.22μH	4.0×4.0×2.1(mm)
	Sunlord	MWSA0624-R22MT	0.22μH	4.1×4.1×2.1(mm)
	WURTH	744373240022	0.22μH	4.5×4.06×1.8(mm)
	TOKYO COILENGINEERING	MCP0420-R22S	0.22μH	4.1×4.1×2.1(mm)

【Typical Examples】(*1) f_{OSC} = 1.2MHz , f_{OSC} = 3.0MHz

	MANUFACTURER	PRODUCT NUMBER	VALUE	SIZE（L×W×T）
C_{IN}	murata	GRM31CR61A476ME15	47μF/10V	3.2×1.6×1.6(mm)
	TAIYO YUDEN	LMK316ABJ476ML	47μF/10V	3.2×1.6×1.6(mm)
	TDK	C3216X6S1A476M	47μF/10V	3.2×1.6×1.6(mm)
C_L	murata	GRM31CR60J476ME19	47μF/6.3V(*1)	3.2×1.6×1.6(mm)
		GRM32ER71A476KE15	47μF/10V(*1)	3.2×2.5×2.5(mm)
	TAIYO YUDEN	JMK316ABJ476ML	47μF/6.3V(*1)	3.2×1.6×1.6(mm)
		LMK325B7476KM	47μF/10V(*1)	3.2×2.5×2.5(mm)
	TDK	C3216X6S0J476M	47μF/6.3V(*1)	3.2×1.6×1.6(mm)
R_{PG}			100kΩ	

(*1) Regarding the value of CL in fosc = 1.2MHz, please refer to Fig.1. Regarding the value of CL in fosc = 3.0MHz please use the capacity described in the table.

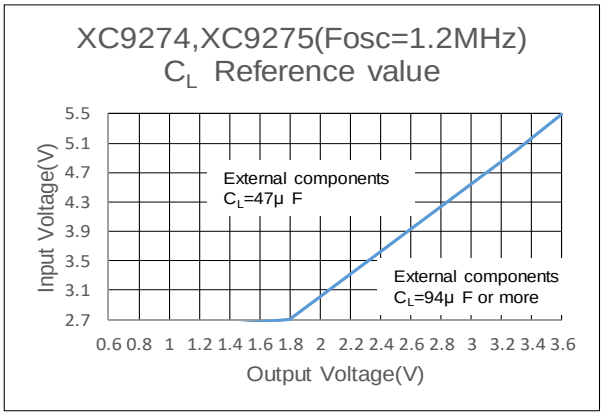

Fig.1:XC9274, XC9275 (fosc=1.2MHz) CL Value

■TYPICAL APPLICATION CIRCUIT(Continued)

< Output voltage setting >

The output voltage can be set by adding an external dividing resistor. The output voltage is determined by the equation below based on the values of R_{FB1} and R_{FB2}.

$$V_{OUT}=0.6 \times (R_{FB1}+R_{FB2})/R_{FB2}$$
$$\text{with } R_{FB1},R_{FB2} \leqq 100k\Omega$$

Adjust the value of the phase compensation speed-up capacitor. Adjust the C_{FB} value so that fzfb = $1/(2\times \pi \times C_{FB} \times R_{FB1})$ is about 3kHz

Output voltage setting range is 0.6V to 3.6V in PWM control, PFM/PWM automatic switching control is 0.8V to 3.6V.

【Setting Example】

V_{OUT}	R_{FB1}	R_{FB2}	C_{FB}	V_{OUT}	R_{FB1}	R_{FB2}	C_{FB}
0.6V	0Ω	Open	Open	1.8V	36kΩ	18kΩ	1500pF
0.7V	11kΩ	62kΩ	4700pF	3.3V	68kΩ	15kΩ	820pF
1.2V	91kΩ	91kΩ	560pF				

< Inductance value setting >

In the XC9274/XC9275 series, it is optimum to set an inductance value within the range below based on the set frequency.

f_{OSCSET}: Set frequency

f_{OSCSET}	Inductance value
3.0MHz	0.22μH ~ 0.25μH
1.2MHz	0.80μH ~ 1.00μH

< Soft-start function >

The soft start time t_{SS} of the XC9274/XC9275 series is set internally.
The soft start time is the time from the start of V_{CE} until the output voltage reaches 90% of the set voltage.
Soft start time tss is typically 0.25 msec.

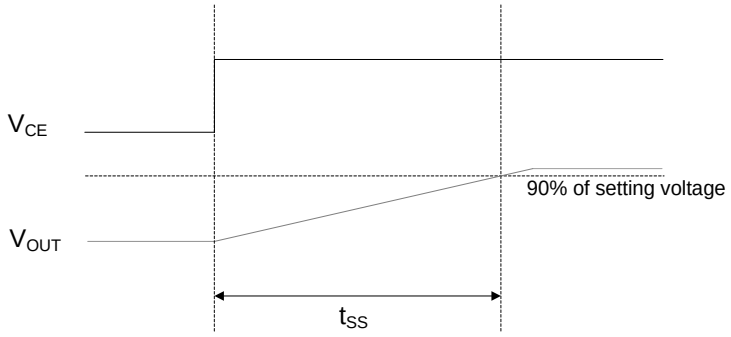

tss=soft start time

■OPERATIONAL EXPLANATION

The XC9274/XC75 series consists of a reference voltage source, error amplifier, comparator, phase compensation, minimum on time generation circuit, output voltage adjustment resistors, P-channel MOS driver transistor, N-channel MOS switching transistor for the synchronous switch, current limiter circuit, UVLO circuit, thermal shutdown circuit, short protection circuit, PWM/PFM selection circuit and others.

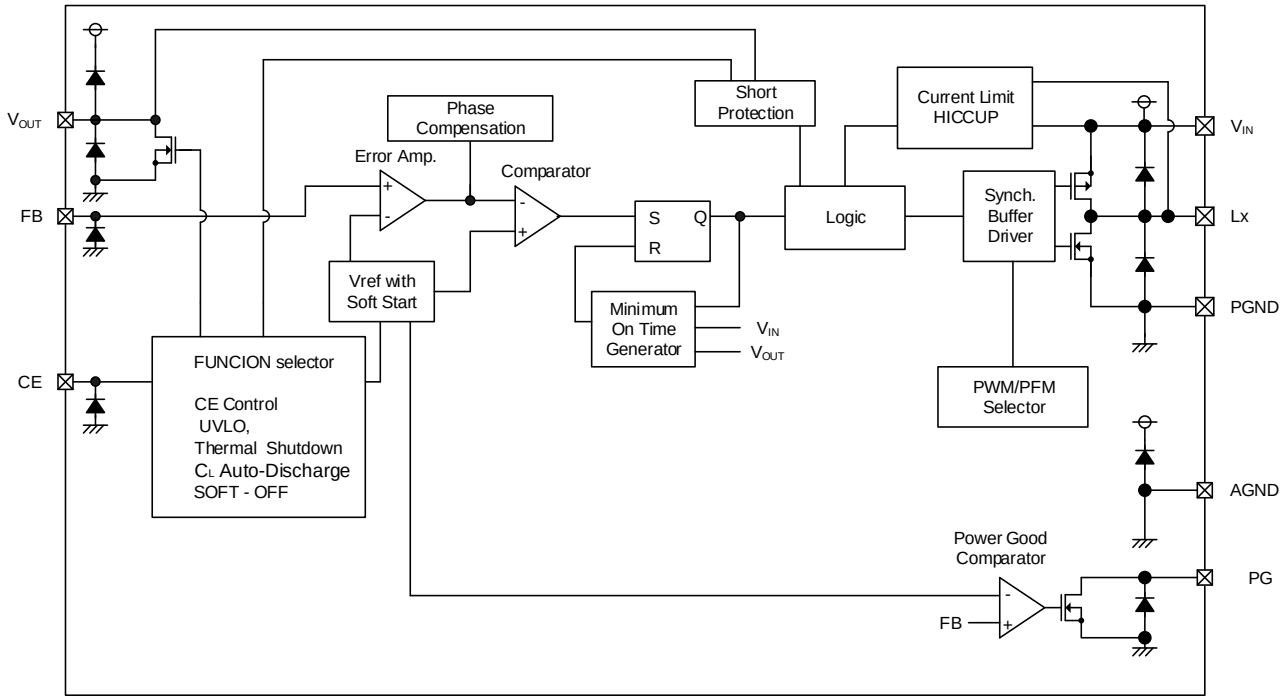

The method is HiSAT-COT (High Speed circuit Architecture for Transient with Constant On Time) control, which features on time control method and a fast-transient response that also achieves low output voltage ripple.

The on time (t_{on}) is determined by the input voltage and output voltage, and turns on the Pch MOS driver Tr. for a fixed time. During the off time (t_{off}), the voltage is generated by resistor division with resistors R_{FB1} and R_{FB2}. The voltage is compared to the reference voltage by the error amp, and the error amp output is phase compensated and sent to the comparator. The comparator compares this signal to the reference voltage, and if the signal is lower than the reference voltage, sets the SR latch. On time then resumes. By doing this, PWM operation takes place with the off time controlled to the optimum duty ratio and the output voltage is stabilized. The phase compensation circuit optimizes the frequency characteristics of the error amp, and generates a ramp wave similar to the ripple voltage that occurs in the output to modulate the output signal of the error amp. This enables a stable feedback system to be obtained even when a low ESR capacitor such as a ceramic capacitor is used, and a fast transient response and stabilization of the output voltage are achieved.

< Minimum on time generation circuit >

Generates an on time that depends on the input voltage and output voltage (t_{on}). The on time is set as given by the equations below.

f_{OSC}=1.2MHz

t_{on} (μs)=$V_{OUT}/V_{IN}\times0.833$

f_{OSC}=3.0MHz

t_{on} (μs)=$V_{OUT}/V_{IN}\times0.333$

< Switching frequency >

The switching frequency can be obtained from the on time (t_{on}), which is determined by the input voltage and output voltage, and the PWM controlled off time (t_{off}) as given by the equation below.

$$f_{OSC}\ (MHz) = V_{OUT}(V) / (V_{IN}(V)\times t_{on}(\mu s))$$

<100% duty cycle mode >

When the load current is heavy and the voltage difference between input voltage and output voltage is small, 100% duty cycle mode is activated and it keeps the Pch MOS driver Tr. keep on. 100% duty cycle mode attains a high output voltage stability and a high-speed response under all load conditions, from light to heavy, even in conditions where the dropout voltage is low.

■OPERATIONAL EXPLANATION (Continued)

< Error amp >

The error amp monitors the output voltage. The voltage divided by the external R_{FB1} and R_{FB2} resistors is a feedback voltage for Error Amp. and compared to the reference voltage. The output voltage of the error amp becomes higher when the feedback voltage is higher than the reference voltage. The frequency characteristics of the error amp are optimized internally.

< Reference voltage source, soft start function >

The reference voltage forms a reference that is used to stabilize the output voltage of the IC.

After "H" level is fed to CE pin, the reference voltage connected to the error amp increases linearly during the soft start interval. This allows the voltage divided by the external R_{FB1} and R_{FB2} resistors and the reference voltage to be controlled in a balanced manner, and the output voltage rises in proportion to the rise of the reference voltage. This operation prevents rush input current and enables the output voltage to rise smoothly.

If the output voltage does not reach the set output voltage within the soft start time, for example a case when the load is heavy or a large capacity output capacitor is connected, the balance between the feedback voltage and the reference voltage is lost, however, the current limit function is activated in order to prevent an excessive increase of input current, enabling a smooth rise of the output voltage.

< Control system selection circuit >

The XC9274 series is selected for PWM control. The XC9275 series is selected for PWM / PFM automatic switching control.

Under PWM control, XC9274 works with the continuous conduction mode (CCM) and ON-duty is decided based on the relationship between the input voltage and the output voltage regardless the output current, and the switching frequency is stable.

On the other hand, under PWM/PFM auto switching control, XC9275 can work with the discontinuous conduction mode (DCM) when the output current is low and the switching frequency varies to lower frequency so that the switching loss reduces and, as a result, the efficiency is improved.

< CE function >

Operation starts when "H" voltage is input into the CE pin. The IC can be put in the shutdown state by inputting "L" voltage into the CE pin. In the shutdown state, the supply current of the IC is 0μA (TYP.), and the Pch MOS driver Tr. And Nch MOS switch Tr. for synchronous rectification turn off. The CE pin is a CMOS input and the sink current is 0μA.

< UVLO Circuit >

When the AV_{IN} voltage becomes 2.40V (TYP.) or lower, the Pch MOS driver transistor output driver transistor is forced OFF to prevent false pulse output caused by unstable operation of the internal circuitry. When the AV_{IN} pin voltage becomes 2.50V (TYP.) or higher, switching operation takes place. By releasing the UVLO function, the IC performs the soft start function to initiate output startup operation. The UVLO circuit does not cause a complete shutdown of the IC, but causes pulse output to be suspended; therefore, the internal circuitry remains in operation.

< Thermal Shutdown >

For protection against heat damage of the ICs, thermal shutdown function monitors chip temperature. The thermal shutdown circuit starts operating and the Pch MOS driver and Nch MOS driver transistor will be turned off when the chip's temperature reaches T_{TSD}(TYP. 150℃). When the temperature drops to T_{TSD}-T_{HYS}(TYP. 130℃) or less after shutting of the current flow, the IC performs the soft-start function to initiate output startup operation.

< Short-circuit protection function >

Short-circuit protection circuit protects the device that is connected to this product and to the input/output in situations such as when the output is accidentally shorted to GND. The short-circuit protection circuit monitors the output voltage, and when the output voltage falls below the short-circuit protection threshold voltage, it turns off the Pch MOS driver Tr and latches it. Once in the latched state, operation is resumed by turning off the IC from the CE pin and then restarting, or by re-input into the V_{IN} pin. Short Protection with Latch is valid only for B,C type products.

< Hiccup >

Hiccup is one of the means to protect the IC and the device connected to the IC from being damaged by an excessive temperature rise caused by the overload state in the long time. Hiccup Mode is valid only for D,E type products.

① When the load current reaches the current limit, IC will be turned off.
② The IC protects itself from being damaged by the heat by maintaining the off state for a constant time.
③ After a certain time in state ②, the IC resumes operation to check whether or not the over current condition is continuing.
④ If the over current state continues, the IC returns to ②. The IC restarts by a soft start if the overcurrent state is released.

■OPERATIONAL EXPLANATION (Continued)

< C_L High Speed Discharge >

C_L High Speed Discharge can quickly discharge the electric charge at the output capacitor (C_L) via the Nch MOS switch transistor and auto-discharge resistance located between the V_{OUT} pin and the GND pin when "L" level signal is fed to CE pin and IC is disable. It can prevent a malfunction of the device connected to the output of XC9274/XC9275 due to the stored electric charge at the output capacitor when XC9274/XC9275 is disable.

$$V = V_{OUT(T)} \times e^{-t/\tau}$$
$$t = \tau \, Ln\,(V_{OUT(T)} / V)$$

V : Output voltage after discharge,
$V_{OUT(T)}$: Output voltage
t : Discharge time
τ: $C_L \times R_{DCHG}$
C_L : Capacitance of Output capacitor
R_{DCHG} : C_L auto-discharge resistance,
but it depends on supply voltage.

Output Voltage Dischage characteristics
R_{DCHG} = 65Ω(TYP) C_L=47μF

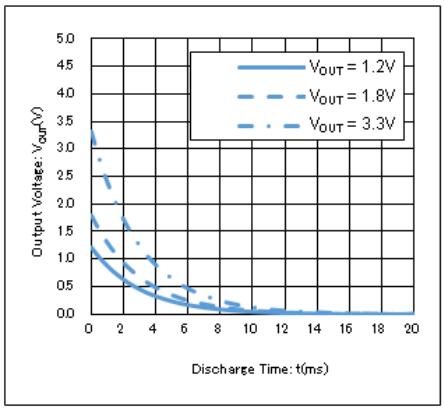

< Soft-off function >

For the B and D type products only, when L level is fed to CE pin, a Soft-off function is activated.
The function can discharge the electric charge in the output capacitor much faster than C_L high speed discharge function because the function can turn on an internal Nch MOS switch which is for synchronous rectification originally and use it for the discharge. (Refer to a diagram below)

This function make a power-off sequence easier because it can prevent a device connected to the output of XC9274/XC9275 from a malfunction caused by the stored electric charge in the output capacitor of XC9274/XC9275 when it is disable.

Furthermore, the Soft-off function regenerates energy by Nch MOS switching Tr., and the input voltage rises by the regenerative energy. The rise voltage of the input voltage can be calculated with using the following equation, once the design has been completed, verification with actual components should be required.

【Equation】

The rise voltage of the input voltage＝$(V_{OUT}-0.2)^2 \times C_L/(2 \times V_{IN} \times C_{IN})$

V_{IN} : Input voltage
V_{OUT} : Output voltage
C_L: Actual capacitance value of an output Capacitor (C_L)
C_{IN}: Actual capacitance value of an input Capacitor (C_{IN})

【Calculation Example】

When V_{IN}=5.0V, V_{OUT}=1.8V, C_{IN}=47μF, C_L=47μF
The rise voltage of the input voltage＝$(1.8-0.2)^2 \times (47 \times 10^{-6})/(2 \times 5.0 \times (47 \times 10^{-6}))$
＝0.256V

Soft-off function vs C_L High Speed Discharge
C_L＝47μF

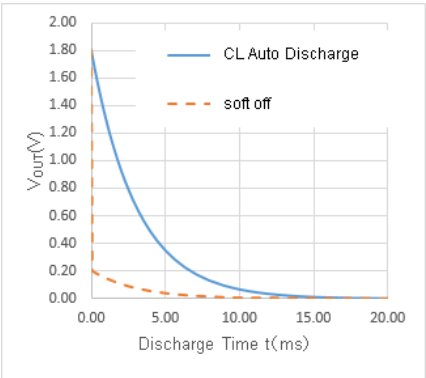

< Current Limit >

The current limiter circuit monitors the current flowing through the P-channel MOS driver transistor connected to the Lx pin. When the driver current is bigger than a specific level, the current limit function operates to turn off the pulses from the Lx pin. When the over current state is eliminated, the IC resumes its normal operation.

■OPERATIONAL EXPLANATION (Continued)

< Power good >

Output state can be monitored using the power good function.
Connect pull-up resistor to a PG pin as its output configuration is Nch open drain.
The PG pin outputs "L" signal in the following cases.

Case1 : For V_{OUT} fluctuation

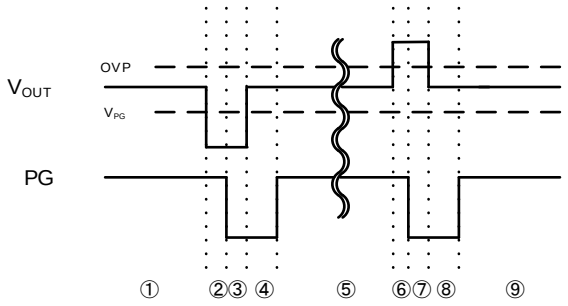

①The initial conditions, V_{OUT} is a stable state.
②When V_{OUT} falls to less than the threshold V_{PG} of the PG, PG system starts to count the internal delay (TYP=140μs).
③PG voltage goes down to GND level after the internal delay.
④After V_{OUT} goes up higher than the threshold V_{PG} , PG system starts to count the internal delay（TYP=180μs）.
⑤PG voltage goes up to the pull up voltage after the internal delay.
⑥When V_{OUT} goes up to higher than threshold OVP , PG system starts to count the internal delay (TYP=140μs).
⑦PG voltage goes up to the pull up voltage after the internal delay.
⑧When V_{OUT} falls to less than the threshold OVP , PG system starts to count the internal delay(TYP=180μs).
⑨PG voltage goes up to the pull up voltage after the internal delay.
* When the FB voltage becomes 0.7V of the OVP threshold and V_{OUT} rises more than +17%, PG is made the GND level.

Case2 : For Soft-start function, Thermal Shutdown, Short-circuit protection function

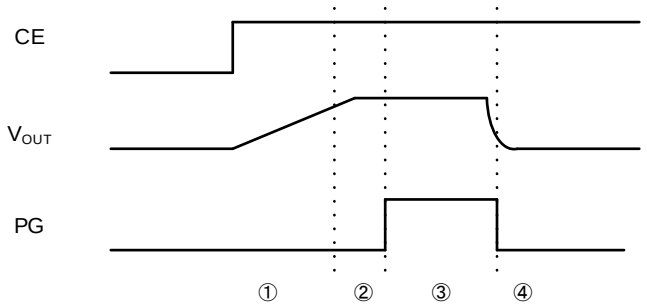

※Short-circuit protection can be used only for B, C type products.

①Assume V_{IN} has been applied.When H level is fed to the CE pin, V_{OUT} will rise by using a Soft-start function.
PG voltage is the GND level during Soft-start operation.
②After V_{OUT} goes up to 90% of the setting voltage, PG system starts to count the internal delay (TYP=140μs).
③PG voltage goes up to the pull up voltage after the internal delay.
④When a short circuit comes at V_{OUT} or when thermal shut down is activated , PG voltage goes down to the GND level promptly without an internal delay.

■OPERATIONAL EXPLANATION (Continued)

Case3: For C_L High Speed Discharge (CE= “L” voltage)

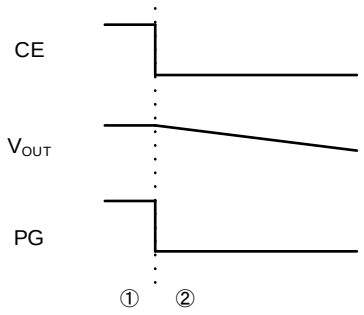

※It corresponds to the operation of C, E type products.

①The initial conditions, V_{OUT} is a stable state.
②L level is fed to CE pin and then XC9274/XC9275 is in a standby state. Therefore V_{OUT} begins to fall down by a C_L High Speed Discharge. In this case, PG voltage goes down to GND level promptly.

Case4 : For Soft-off function (CE= “L” voltage)

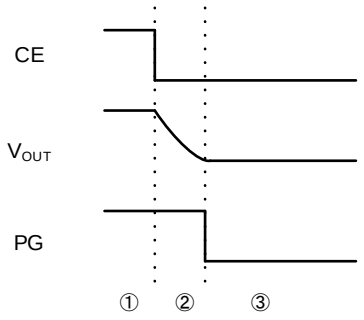

※It corresponds to the operation of C, E type products.

①The initial conditions, V_{OUT} is a stable state.
②L level is fed to CE pin and then XC9274/XC9275 is in a standby state. Therefore V_{OUT} begins to fall down sharply by soft-off function. In this case, PG voltage goes down to GND level (V_{OUT} = 0.2V or less) after soft-off function is completed.

Case5 : For UVLO

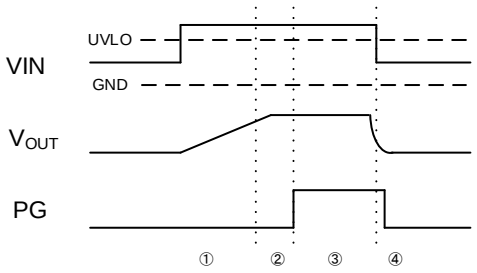

①When a voltage which is higher than UVLO release voltage is fed to VIN then the output voltage goes up with a soft-start function. During the soft-start, PG goes down to GND level and stays at the level.
②When the output voltage goes up to 90% of the nominal output voltage, an internal counter circuit starts to count a delay times. The delay time is 140us (Typ.).
③After the delay time, PG goes up to "H" level which is equal to a pull-up voltage.
④When a voltage which is lower than UVLO detect voltage and higher than CE “H” level is fed to VIN then an internal counter circuit starts to count.
a delay times. The delay time is 90us (Typ.).
⑤After the delay time, PG goes down to GND level.

■NOTE ON USE

1) For the phenomenon of temporal and transitional voltage decrease or voltage increase, the IC may be damaged or deteriorated if IC is used beyond the absolute MAX. specifications.

2) Spike noise and ripple voltage arise in a switching regulator as with a DC/DC converter. These are greatly influenced by external component selection, such as the coil inductance, capacitance values, and board layout of external components. Once the design has been completed, verification with actual components should be done.

3) The DC/DC converter characteristics depend greatly on the externally connected components as well as on the characteristics of this IC, so refer to the specifications and standard circuit examples of each component when carefully considering which components to select. Be especially careful of the capacitor characteristics and use B characteristics (JIS standard) or X7R, X5R (EIA standard) ceramic capacitors.
If the capacitance value is not sufficient by degrading CL due to the low temp. Condition and DC bias feature, the duty cycle might not be stable. Add capacitance value for CL if necessary.

4) Make sure that the PCB GND traces are as thick and wide as possible. The PGND pin and AGND pin fluctuation caused by high ground current at the time of switching may result in instability of the IC. Therefore, the GND traces close to the PGND pin and AGND pin are important.

5) Mount external components as close as possible to the IC. Keep the wiring short and thick to lower the wiring impedance.

6) A feature of HiSAT-COT control is that it controls the off time in order to control the duty, which varies due to the effects of power loss. In addition, changes in the on time due to 100% duty cycle mode are allowed. For this reason, caution must be exercised as the characteristics of the switching frequency will vary depending on the external component characteristics, board layout, input voltage, output voltage, load current and other parameters.

7) Due to propagation delay inside the product, the on time generated by the minimum on time generation circuit is not the same as the on time that is the ratio of the input voltage to the output voltage.

8) The actual coil current may exceed the current limit value due to internal propagation delay.

9) The CE pin is a CMOS input pin. Do not use with the pin open. If connecting to the input or ground, use the resistor not more than 1MΩ or less. To prevent malfunctioning of the device connected to this product or the input/output due to short circuiting between pins, it is recommended that a resistor be connected.

10) Regarding XC9275 which has PWM/PFM auto switching control method, it works with a discontinuous conduction mode at light loads, and in this case where the voltage difference between input voltage and output voltage is low or the coil inductance is higher than the value indicated in the standard circuit example, the coil current may reverse when the load is light, and thus pulse skipping will not be possible and light load efficiency will worsen.

11) When the voltage difference between input voltage and output voltage is low, the load stability feature may deteriorate.

12) Soft-off function regenerates energy by Nch MOS switching Tr. Additionally the input voltage rises by the regenerative energy. In this case, please note the input voltage not to exceed 5.5V. The Lx voltage may be beyond the absolute maximum ratings when the input voltage exceeds 5.5V.
The rise of input voltage can be suppressed by increasing C_{IN}. Please increase C_{IN} based on the following equation.
For your design, please evaluate this issue on your PCB and actual external components sufficiently.

【Equation】
$C_{IN}>(V_{OUT}-0.2)^2\times C_L/(\Delta V_{IN}\times 2\times V_{IN})$

V_{IN}: Input voltage
ΔV_{IN}:$(5.5-V_{IN})$
V_{OUT}: Output voltage
C_L: Actual capacitance value of an output Capacitor (C_L)
C_{IN}: Actual capacitance value of an input Capacitor (C_{IN})

【Calculation Example】
When V_{IN}=5.0V、V_{OUT}=1.8V、C_L=47μF
$\Delta V_{IN}=(5.5-5.0)=0.5V$
$C_{IN}>(1.8-0.2)^2\times 47/(0.5\times 2\times 5.0)$
$C_{IN}>24.064\mu F$

13) In case that the set output voltage is less than 0.8V with the PWM/PFM automatic control, super positioning ripple and efficiency decline can occur at the light load.
Due to this reason, please be sure to set the output voltage in the range of 0.8V to 3.6V for the PWM/PFM automatic control

■NOTE ON USE (Continued)

14) Torex places an importance on improving our products and their reliability. We request that users incorporate fail-safe designs and post-aging protection treatment when using Torex products in their systems.

15) Instructions of pattern layouts

The operation may become unstable due to noise and/or phase lag from the output current when the wire impedance is high, please place the input capacitor(C_{IN}) and the output capacitor (C_L) as close to the IC as possible.

(1) In order to stabilize V_{IN} voltage level, we recommend that a by-pass capacitor (C_{IN}) to be connected as close as possible to the VIN & PGND pins and the VIN & AGND pins.

(2) Please mount each external component as close to the IC as possible.

(3) Wire external components as close to the IC as possible and use thick, short connecting traces to reduce the circuit impedance.

(4) Make sure that the GND traces are as thick as possible, as variations in ground potential caused by high ground currents at the time of switching may result in instability of the IC.

(5) This series' internal driver transistors bring on heat because of the output current and ON resistance of P-channel and N-channel MOS driver transistors. Please consider the countermeasures against heat if necessary.

< Reference pattern layout >

1st Layer

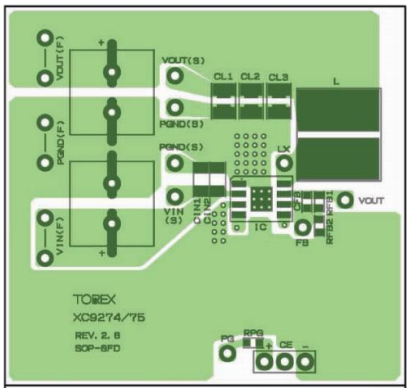

2nd Layer

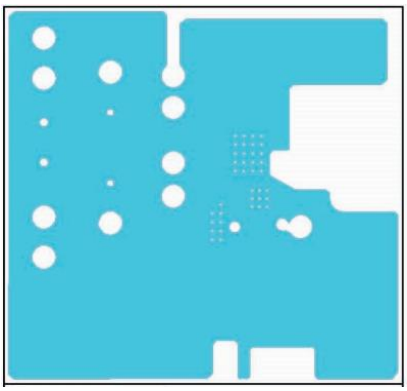

3rd Layer

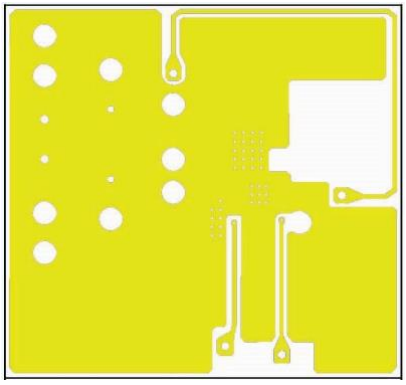

4th Layer

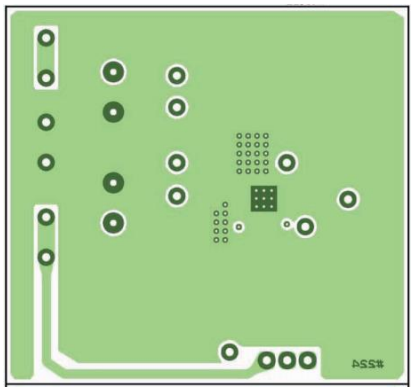

PCB mounted

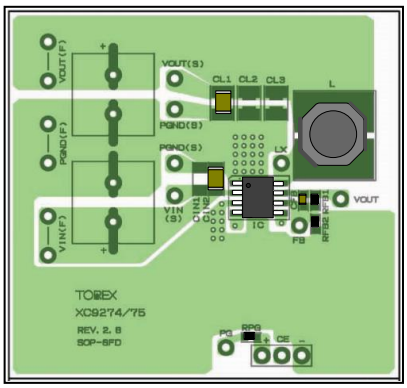

■NOTE ON USE (Continued)

＜Estimation for the power consumption＞

The power loss of a total buck DC/DC system (P_all) is as follows.

P_all $=V_{IN}\times I_{IN}-V_{OUT}\times I_{OUT}$

$=V_{OUT}\times I_{OUT}/EFFI-V_{OUT}\times I_{OUT}$

$=-V_{OUT}\times I_{OUT}\times (1-1/EFFI)$

The power loss at a coil (P_coil) is as follows.

P_coil = $I_{OUT}^2\times DCR$

DCR: The direct current resistance of a coil

The power loss at IC (P_IC) can be calculated by subtracting the power loss at a coil from the one of a total buck DC/DC system.

P_IC = P_all - P_coil

The temperature of IC (Tj) can be calculated by the function below.

R : Thermal resistance（℃/W)

Tj = Ta + R×P_IC

The temperature resistance varies based on the power dissipation of a PC board and so on.

Please note that Tj should be lower than 125℃

＜Power consumption performance example with a reference PCB pattern＞

・Conditions :

V_{IN}=5.0V

V_{OUT}=1.8V

output current：I_{OUT}=3.0A

Efficiency：EFFI=85.48%

Thermal resistance R=21.49℃/W（Mount on a board）

DCR of a coil =5.81mΩ

The power loss of a total buck DC/DC system (P_all) $=-V_{OUT}\times I_{OUT}\times (1-1/EFFI)$

$=-1.8\times 3.0(1-1/0.8548)$

≒0.92(W)

The power loss at a coil (P_coil) = $I_{OUT}^2\times DCR$

$=3^2\times 0.00581=0.052$ (W)

The power loss at IC (P_IC) = P_all - P_coil

=0.92 -0.052

=0.87 (W)

The temperature of IC (Tj) = The ambient temperature so that Tj becomes125℃ (Ta) =Tj-R×P_IC

=125-21.49*0.87

=106.3℃

The calculation result indicates the maximum ambient temperature is 106.3℃ under the condition.

However, since the maximum operation ambient temperature is defined at 105℃, IC can work at 105℃ or less as the ambient temperature.

Ta-I_{OUTMAX} feature example with SOP-8FD recommendation PCB pattern

Measurement Condition

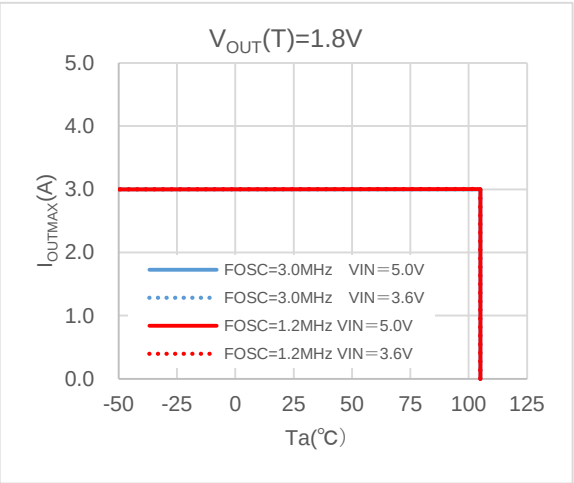

Condition	:Mount on a board
Soldering	:Lead (Pb) free
Board	:Dimensions 53 x 54 mm (2862 mm² in one side) (Reference pattern layout of SOP-8FD)
Copper thickness	:35μm(Cu)＋20μm(plating)＝55μm
Material	:Glass Epoxy (FR-4)
Thickness	:1.2mm
Through-hole	:40×0.3 Diameter 4×0.8 Diameter 17×1.0 Diameter

■TYPICAL PERFORMANCE CHARACTERISTICS

(1) Efficiency vs. Output Current

XC9274x06D / XC9275x06D (V_{OUT}=1.2V)

L = XAL4020 (0.22μH), C_{IN} = 47μF(GRM31CR61A476ME15L)
C_L = 47μF(GRM31CR60J476ME19L)
RFB1=91kΩ, RFB2=91kΩ, CFB=560pF

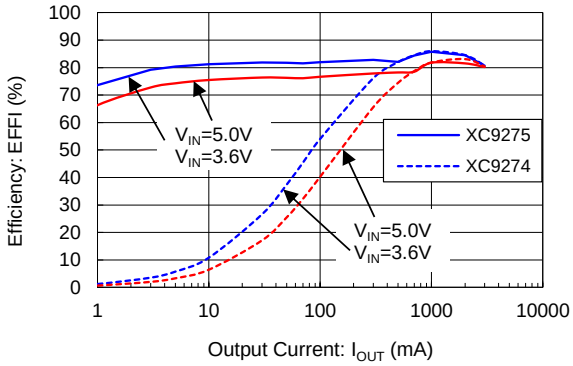

XC9274x06C / XC9275x06C (V_{OUT}=1.2V)

L = XAL5030 (0.8μH), C_{IN} = 47μF(GRM31CR61A476ME15L)
C_L = 47μF(GRM31CR60J476ME19L)
RFB1=91kΩ, RFB2=91kΩ, CFB=560pF

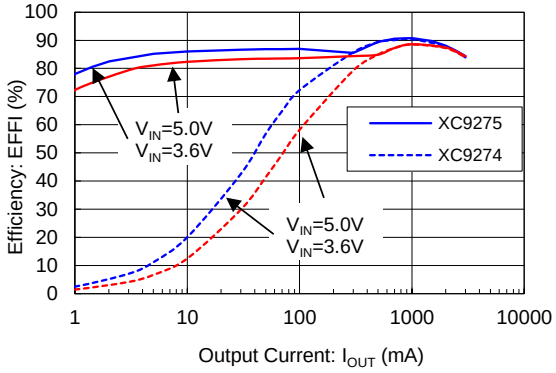

XC9274x06D / XC9275x06D (V_{OUT}=1.8V)

L = XAL4020 (0.22μH), C_{IN} = 47μF(GRM31CR61A476ME15L)
C_L = 47μF(GRM31CR60J476ME19L)
RFB1=36kΩ, RFB2=18kΩ, CFB=1500pF

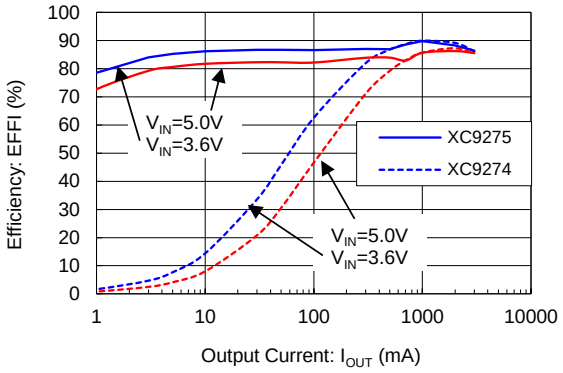

XC9274x06C / XC9275x06C (V_{OUT}=1.8V)

L = XAL5030 (0.8μH), C_{IN} = 47μF(GRM31CR61A476ME15L)
C_L = 47μF(GRM31CR60J476ME19L)
RFB1=36kΩ, RFB2=18kΩ, CFB=1500pF

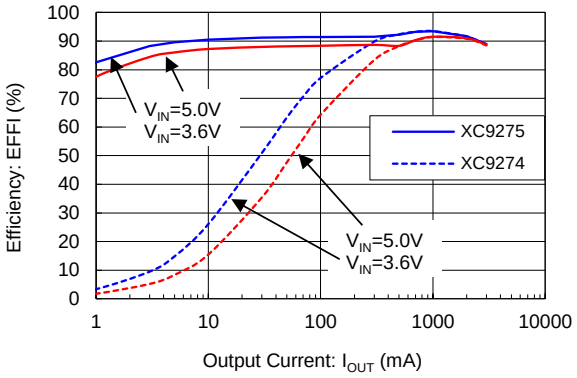

XC9274x06D / XC9275x06D (V_{OUT}=3.3V)

L = XAL4020 (0.22μH), C_{IN} = 47μF(GRM31CR61A476ME15L)
C_L = 47μF(GRM31CR60J476ME19L)
RFB1=68kΩ, RFB2=15kΩ, CFB=820pF

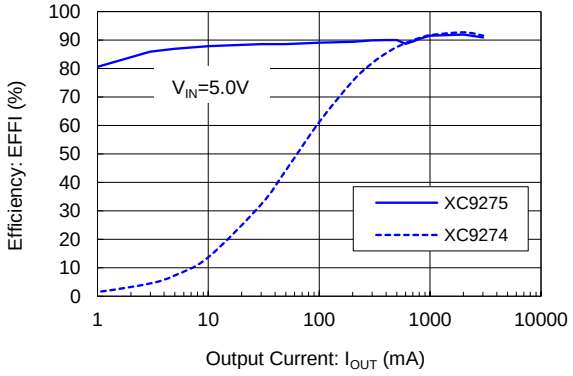

XC9274x06C / XC9275x06C (V_{OUT}=3.3V)

L = XAL5030 (0.8μH), C_{IN} = 47μF(GRM31CR61A476ME15L)
C_L = 47μF(GRM31CR60J476ME19L)
RFB1=68kΩ, RFB2=15kΩ, CFB=820pF

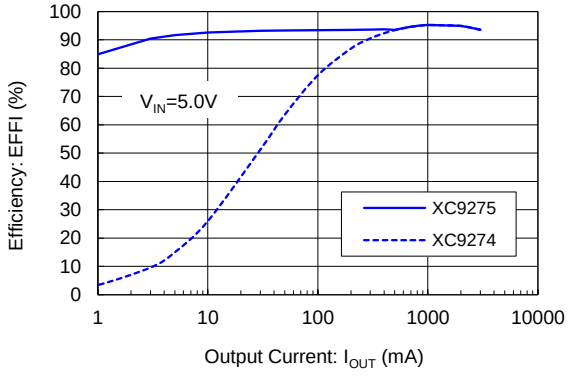

■TYPICAL PERFORMANCE CHARACTERISTICS (Continued)

(2) Output Voltage vs. Output Current

XC9274x06D (V_{OUT}=1.8V)
L = XAL4020 (0.22μH), C_{IN} = 47μF(GRM31CR61A476ME15L)
C_L = 47μF(GRM31CR60J476ME19L)
RFB1=36kΩ, RFB2=18kΩ, CFB=1500pF

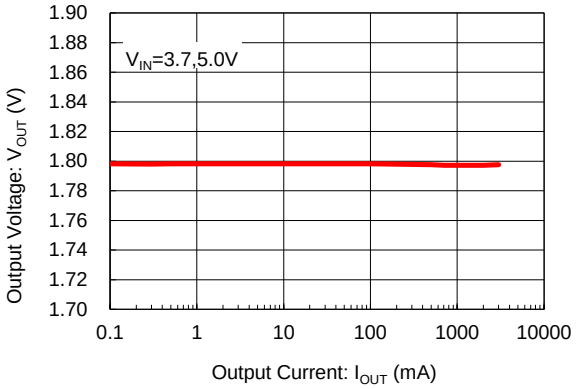

XC9274x06D (V_{OUT}=3.3V)
L = XAL4020 (0.22μH), C_{IN} = 47μF(GRM31CR61A476ME15L)
C_L = 94μF(GRM31CR60J476ME19L)
RFB1=68kΩ, RFB2=15kΩ, CFB=820pF

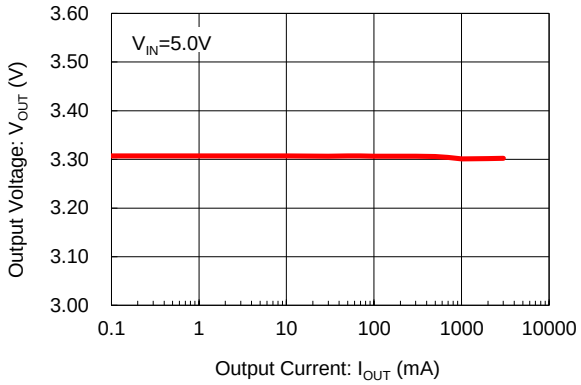

(3) Ripple Voltage vs. Output Current

XC9274x06D / XC9275x06D (V_{OUT}=1.8V)
L = XAL4020 (0.22μH), C_{IN} = 47μF(GRM31CR61A476ME15L)
C_L = 47μF(GRM31CR60J476ME19L)
RFB1=36kΩ, RFB2=18kΩ, CFB=1500pF

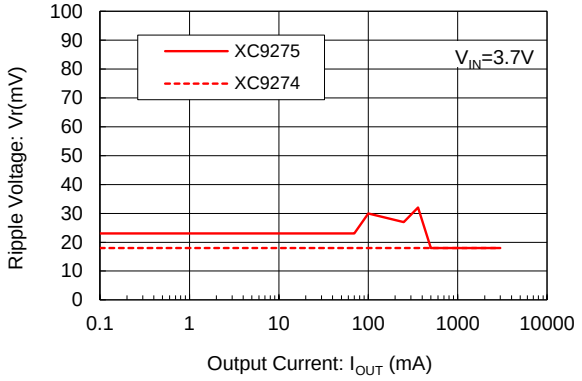

XC9274x06D / XC9275x06D (V_{OUT}=3.3V)
L = XAL4020 (0.22μH), C_{IN} = 47μF(GRM31CR61A476ME15L)
C_L = 47μF(GRM31CR60J476ME19L)
RFB1=68kΩ, RFB2=15kΩ, CFB=820pF

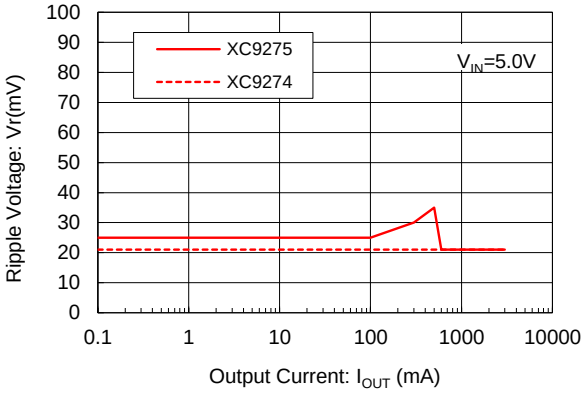

XC9274x06C / XC9275x06C (V_{OUT}=1.8V)
L = XAL5030 (0.8μH), C_{IN} = 47μF(GRM31CR61A476ME15L)
C_L = 47μF(GRM31CR60J476ME19L)
RFB1=36kΩ, RFB2=18kΩ, CFB=1500pF

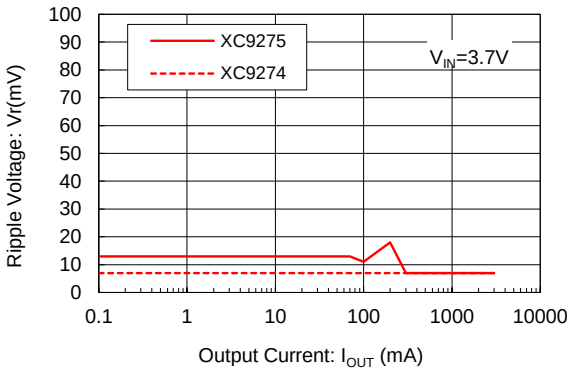

XC9274x06C / XC9275x06C (V_{OUT}=3.3V)
L = XAL5030 (0.8μH), C_{IN} = 47μF(GRM31CR61A476ME15L)
C_L = 47μF(GRM31CR60J476ME19L)
RFB1=68kΩ, RFB2=15kΩ, CFB=820pF

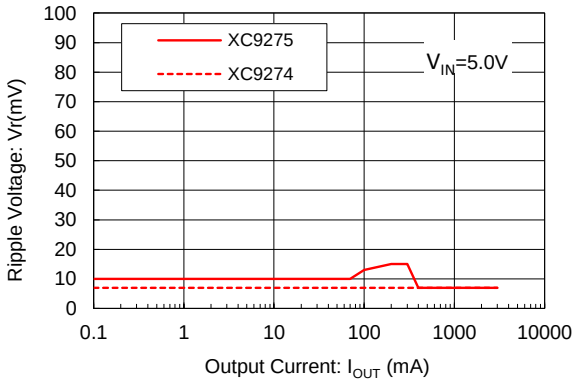

■TYPICAL PERFORMANCE CHARACTERISTICS (Continued)

(4) Output Voltage vs. Ambient Temperature

XC9274x06D (V_{OUT}=1.8V)

L = XAL4020 (0.22μH), C_{IN} = 47μF(GRM31CR61A476ME15L)
C_L = 47μF(GRM31CR60J476ME19L)
RFB1=36kΩ, RFB2=18kΩ, CFB=1500pF

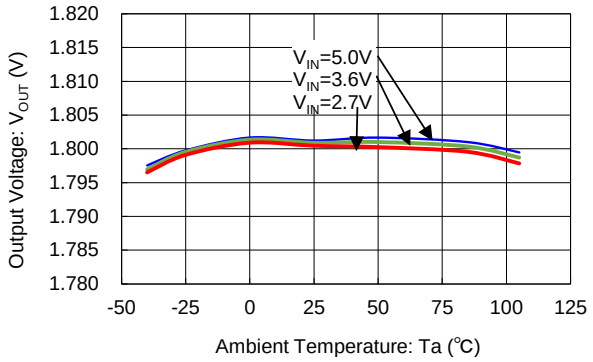

(5) UVLO Voltage vs. Ambient Temperature

XC9274 / XC9275

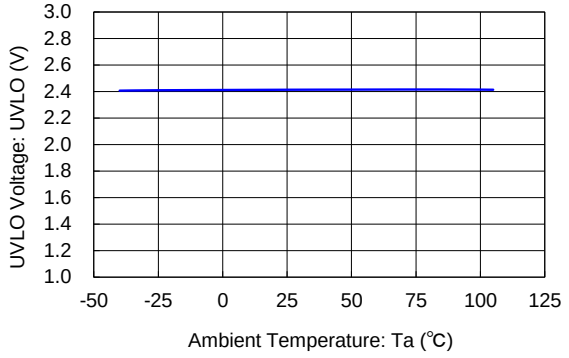

(6) Quiescent Current vs. Ambient Temperature

XC9274 / XC9275

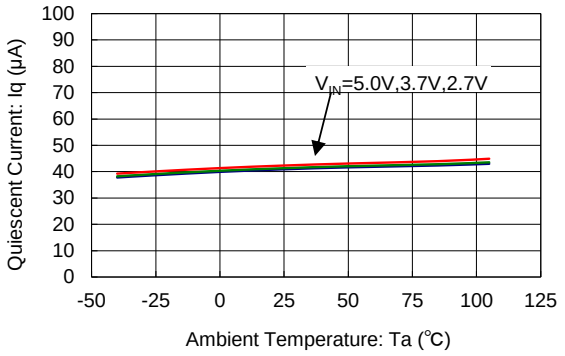

(7) Stand-by Current vs. Ambient Temperature

XC9274 / XC9275

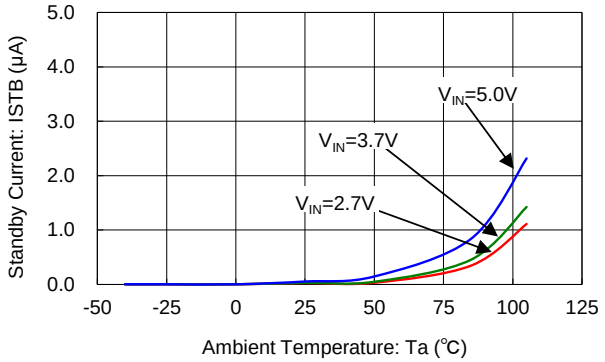

(8) Oscillation Frequency vs. Output Current

XC9274x06D

L = XAL4020 (0.22μH), C_{IN} = 47μF(GRM31CR61A476ME15L)
C_L = 47μF(GRM31CR60J476ME19L)
RFB1=36kΩ, RFB2=18kΩ, CFB=1500pF

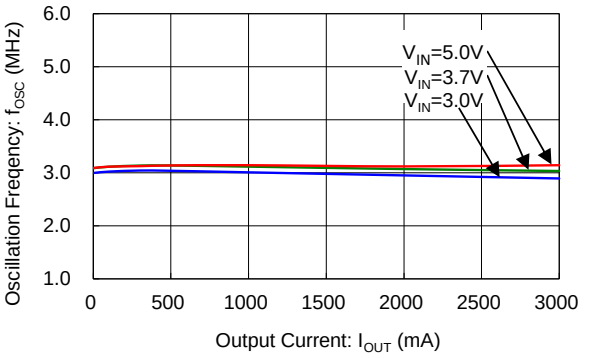

XC9274x06C

L = XAL5030 (0.8μH), C_{IN} = 47μF(GRM31CR61A476ME15L)
C_L = 47μF(GRM31CR60J476ME19L)
RFB1=36kΩ, RFB2=18kΩ, CFB=1500pF

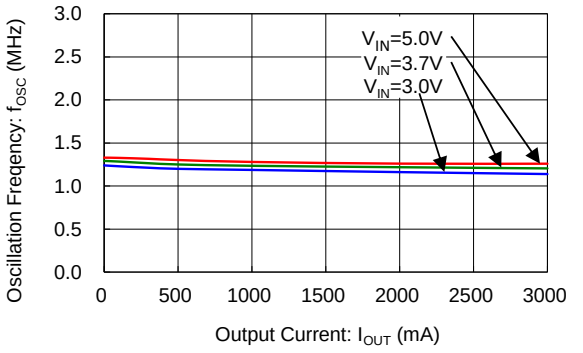

■TYPICAL PERFORMANCE CHARACTERISTICS (Continued)

(9) Oscillation Frequency vs. Output Voltage

XC9274x06D

L = XAL4020 (0.22μ H), Iout=1A, VIN=3.3V

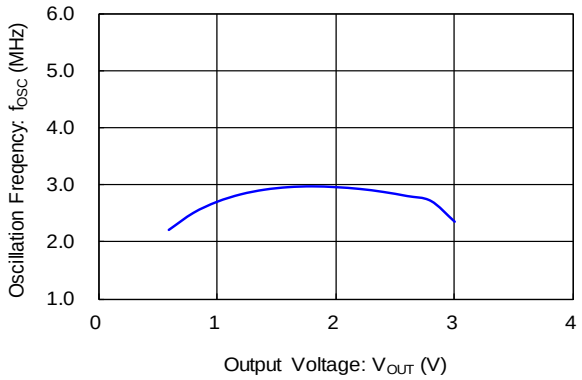

XC9274x06C

L = XAL5030 (0.8μ H), Iout=1A, VIN=3.3V

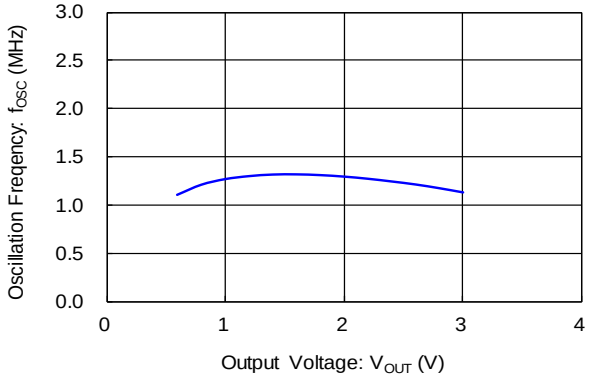

(10) Pch Driver ON Resistance vs. Ambient Temperature

XC9274 / XC9275

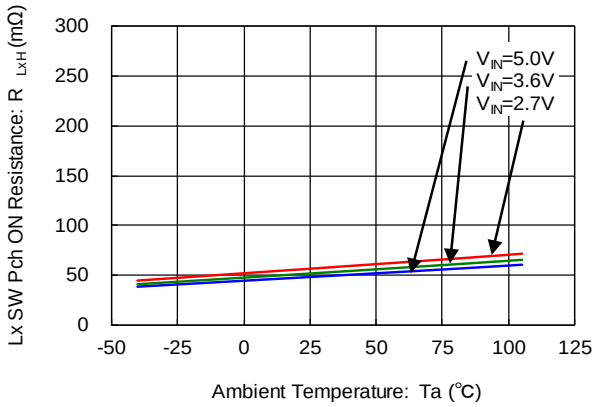

(11) Nch Driver ON Resistance vs. Ambient Temperature

XC9274 / XC9275

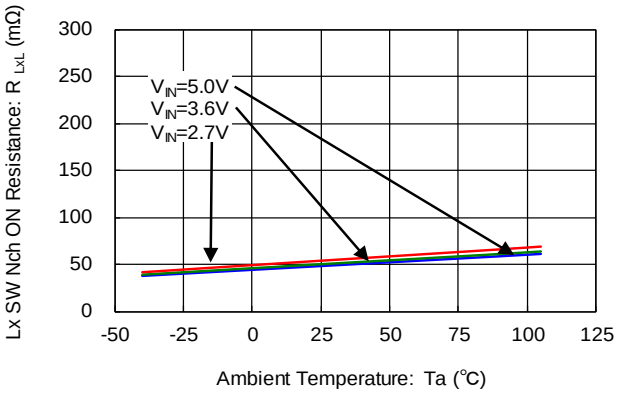

(12) LxSW"H" Leakage Current vs. Ambient Temperature

XC9274 / XC9275

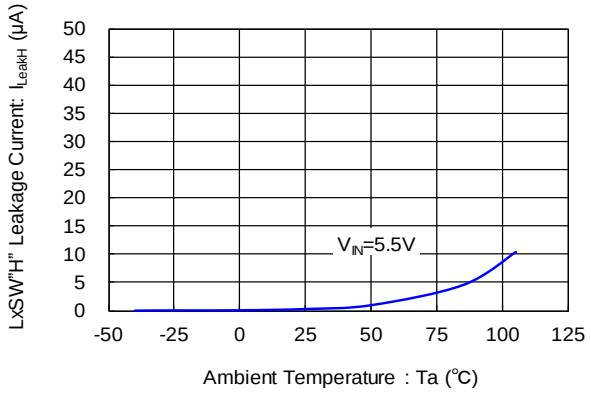

(13) LxSW"L" Leakage Current vs. Ambient Temperature

XC9274 / XC9275

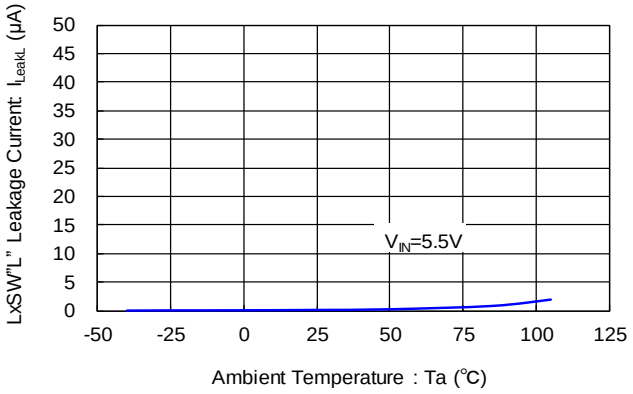

■TYPICAL PERFORMANCE CHARACTERISTICS (Continued)

(14) CE"H" Voltage vs. Ambient Temperature

XC9274 / XC9275

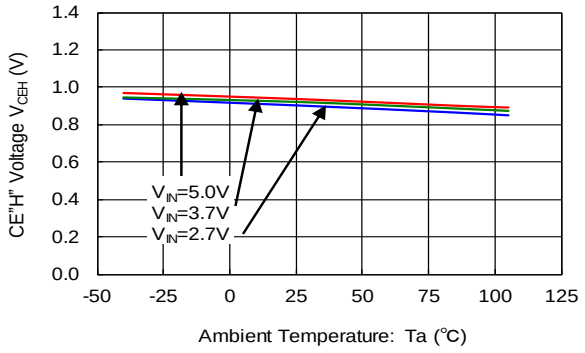

(15) CE"L" Voltage vs. Ambient Temperature

XC9274 / XC9275

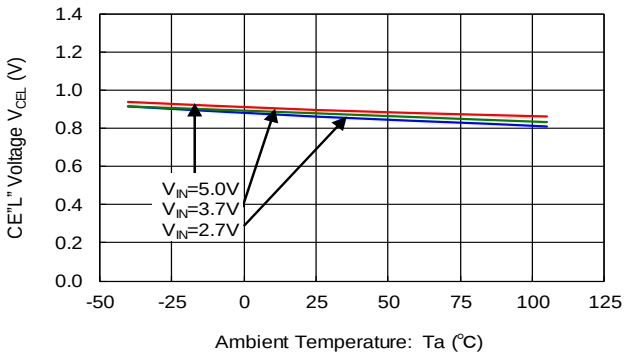

(16) Current Limit vs. Ambient Temperature

XC9274 / XC9275

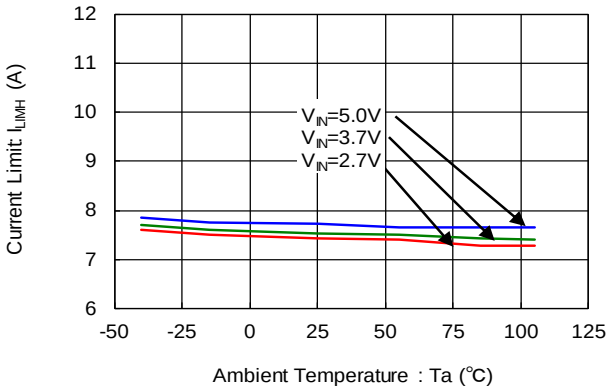

(17)Soft-Start Time vs. Ambient Temperature

XC9274 / XC9275

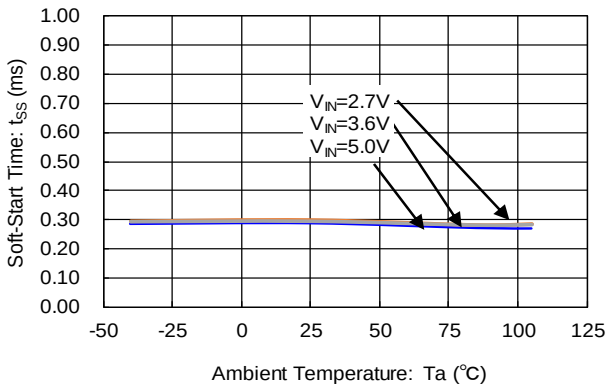

(18) Soft - off Time vs. Ambient Temperature

XC9274B06x / XC9274D06x
XC9275B06x / XC9275D06x

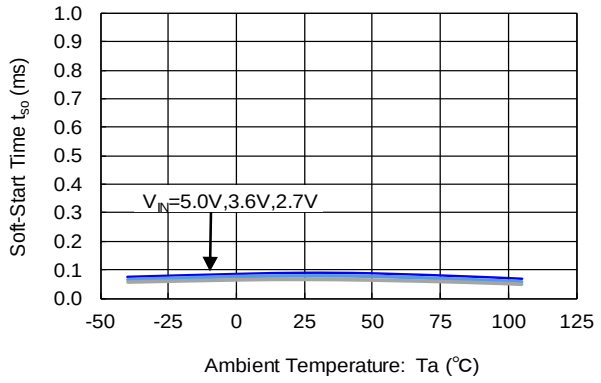

(19) CL Discharge Resistance vs. Ambient Temperature

XC9274C06x / XC9274E06x
XC9275C06x / XC9275E06x

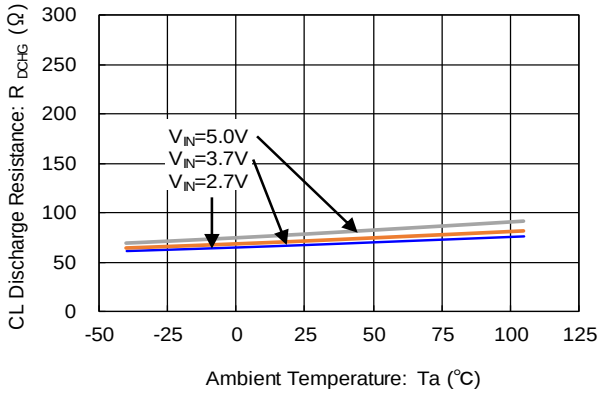

■TYPICAL PERFORMANCE CHARACTERISTICS (Continued)

(20) PG detect voltage vs. Ambient Temperature

XC9274 / XC9275

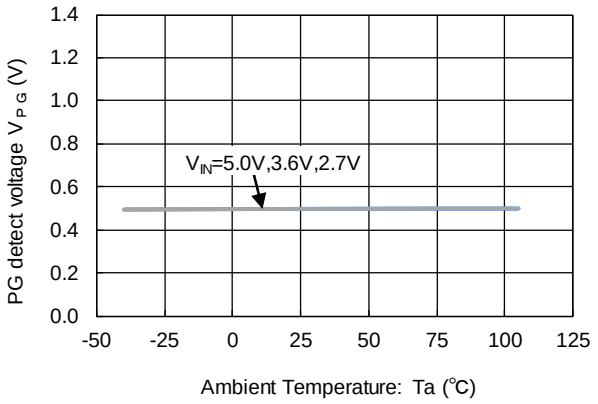

(21) Short Protection Threshold vs. Ambient Temperature

XC9274B06x / XC9274C06x
XC9275B06x / XC9275C06x

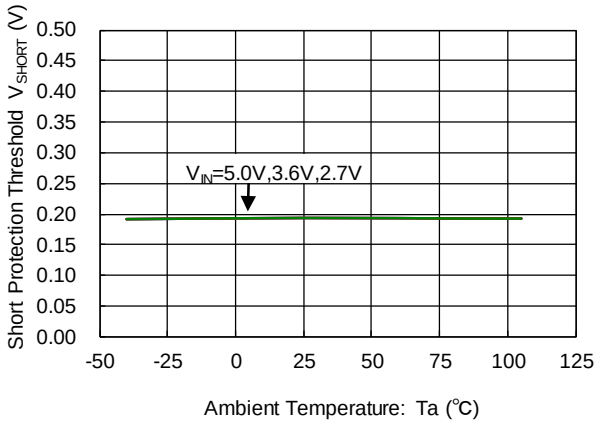

■TYPICAL PERFORMANCE CHARACTERISTICS (Continued)

(22) Load Transient Respones

XC9274B06D
V_{IN} = 5.0V V_{OUT} = 1.2V f_{OSC} = 3.0MHz I_{OUT} = 0.1A ⇒ 3.0A
L = XAL4020 (0.22μH), C_{IN} = 47μF(GRM31CR61A476ME15L)
C_L = 47μF(GRM31CR60J476ME19L)
RFB1=91kΩ, RFB2=91kΩ, CFB=560pF

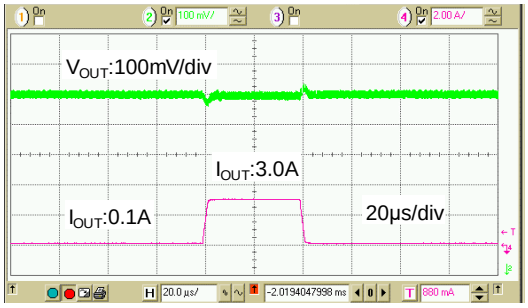

XC9275B06D
V_{IN}= 5.0V V_{OUT} = 1.2V f_{OSC}= 3.0MHz I_{OUT} = 0.1A ⇒ 3.0A
L = XAL4020 (0.22μH), C_{IN} = 47μF(GRM31CR61A476ME15L)
C_L = 47μF(GRM31CR60J476ME19L)
RFB1=91kΩ, RFB2=91kΩ, CFB=560pF

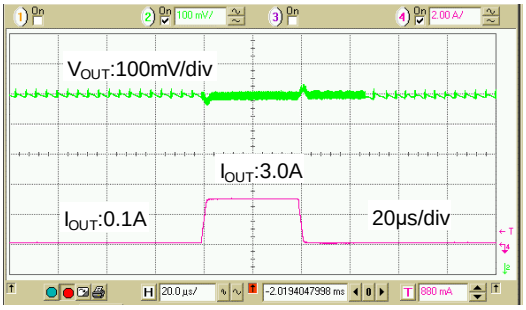

XC9274B06D
V_{IN}= 5.0V V_{OUT} = 1.8V f_{OSC} = 3.0MHz I_{OUT} = 0.1A ⇒ 3.0A
L = XAL4020 (0.22μH), C_{IN} = 47μF(GRM31CR61A476ME15L)
C_L = 47μF(GRM31CR60J476ME19L)
RFB1=36kΩ, RFB2=18kΩ, CFB=1500pF

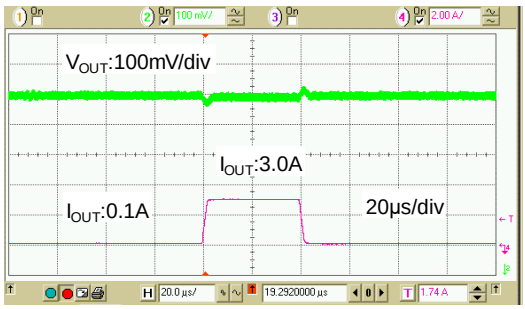

XC9275B06D
V_{IN} = 5.0V V_{OUT} = 1.8V f_{OSC} = 3.0MHz I_{OUT} = 0.1A ⇒ 3.0A
L = XAL4020 (0.22μH), C_{IN} = 47μF(GRM31CR61A476ME15L)
C_L = 47μF(GRM31CR60J476ME19L)
RFB1=36kΩ, RFB2=18kΩ, CFB=1500pF

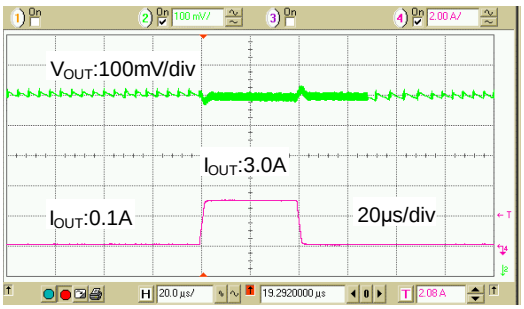

XC9274B06D
V_{IN} = 5.0V V_{OUT} = 3.3V f_{OSC} = 3.0MHz I_{OUT} = 0.1A ⇒ 3.0A
L = XAL4020 (0.22μH), C_{IN} = 47μF(GRM31CR61A476ME15L)
C_L= 47μF(GRM31CR60J476ME19L)
RFB1=68kΩ, RFB2=15kΩ, CFB=820pF

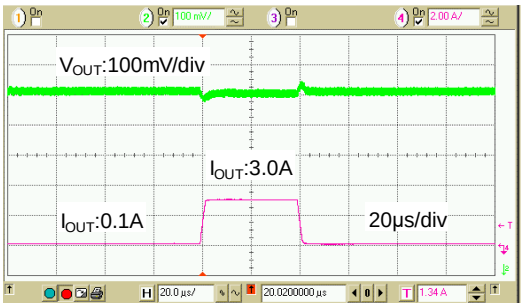

XC9275B06D
V_{IN}= 5.0V V_{OUT} = 3.3V f_{OSC} = 3.0MHz I_{OUT}= 0.1A ⇒ 3.0A
L = XAL4020 (0.22μH), C_{IN} = 47μF(GRM31CR61A476ME15L)
CL = 47μF(GRM31CR60J476ME19L)
RFB1=68kΩ, RFB2=15kΩ, CFB=820pF

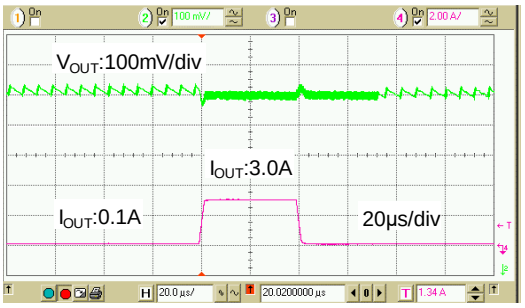

■TYPICAL PERFORMANCE CHARACTERISTICS (Continued)

(22) Load Transient Respones

XC9274D06C
V_{IN} = 5.0V V_{OUT} = 1.2V f_{OSC} = 1.2MHz I_{OUT} = 0.1A ⇒ 3.0A
L = XAL5030 (0.8μH), C_{IN} = 47μF(GRM31CR61A476ME15L)
C_L = 47μF(GRM31CR60J476ME19L)
RFB1=91kΩ, RFB2=91kΩ, CFB=560pF

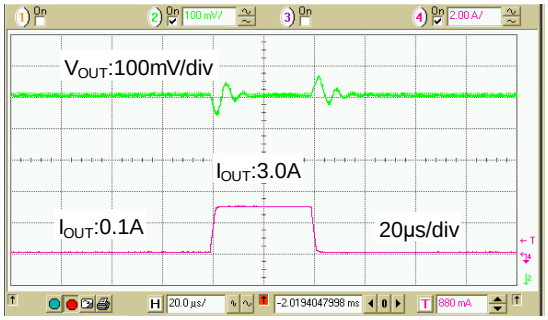

XC9275E06C
V_{IN}= 5.0V V_{OUT} = 1.2V f_{OSC} = 1.2MHz I_{OUT} = 0.1A ⇒ 3.0A
L = XAL5030 (0.8μH), C_{IN} = 47μF(GRM31CR61A476ME15L)
C_L = 47μF(GRM31CR60J476ME19L)
RFB1=91kΩ, RFB2=91kΩ, CFB=560pF

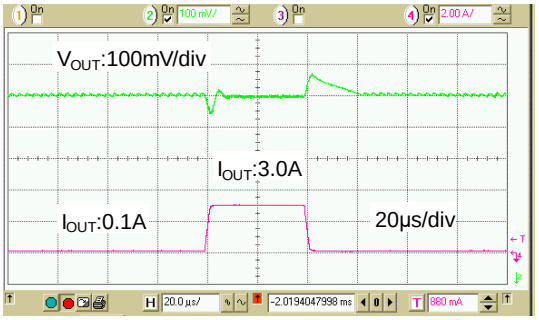

XC9274D06C
V_{IN} = 5.0V V_{OUT} = 1.8V f_{OSC} = 1.2MHz I_{OUT} = 0.1A ⇒ 3.0A
L = XAL5030 (0.8μH), C_{IN} = 47μF(GRM31CR61A476ME15L)
C_L = 47μF(GRM31CR60J476ME19L)
RFB1=36kΩ, RFB2=18kΩ, CFB=1500pF

XC9275E06C
V_{IN} = 5.0V V_{OUT} = 1.8V f_{OSC} = 1.2MHz I_{OUT} = 0.1A ⇒ 3.0A
L = XAL5030 (0.8μH), C_{IN} = 47μF(GRM31CR61A476ME15L)
C_L = 47μF(GRM31CR60J476ME19L)
RFB1=36kΩ, RFB2=18kΩ, CFB=1500pF

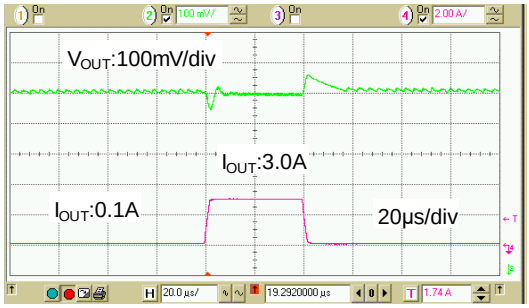

XC9274D06C
V_{IN} = 5.0V V_{OUT} = 3.3V f_{SOC} = 1.2MHz I_{OUT} = 0.1A ⇒ 3.0A
L = XAL5030 (0.8μH), C_{IN} = 47μF(GRM31CR61A476ME15L)
C_L = 94μF(GRM31CR60J476ME19Lx2)
RFB1=68kΩ, RFB2=15kΩ, CFB=820pF

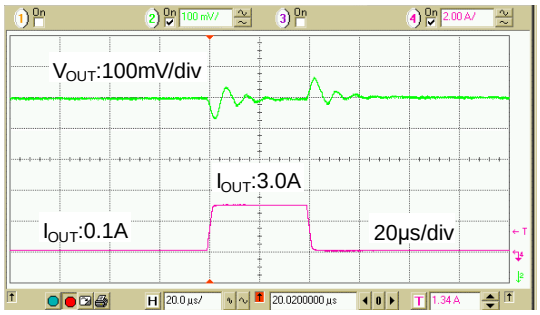

XC9275E06C
V_{IN} = 5.0V V_{OUT} = 3.3V f_{OSC} = 1.2MHz I_{OUT} = 0.1A ⇒ 3.0A
L = XAL5030 (0.8μH), C_{IN} = 47μF(GRM31CR61A476ME15L)
C_L = 94μF(GRM31CR60J476ME19Lx2)
RFB1=68kΩ, RFB2=15kΩ, CFB=820pF

■PACKAGING INFORMATION

For the latest package information go to, www.torexsemi.com/technical-support/packages

PACKAGE	OUTLINE / LAND PATTERN	THERMAL CHARACTERISTICS
SOP-8FD	SOP-8FD PKG	SOP-8FD Power Dissipation

■MARKING RULE

SOP-8FD

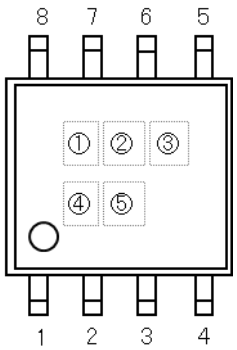

① represents product series

MARK	PRODUCT SERIES
6	XC9274*****-G
7	XC9275*****-G

② represents Type and Adjustable Output Voltage

MARK	PRODUCT SERIES
B	XC9274B06***-G XC9275B06***-G
C	XC9274C06***-G XC9275C06***-G
D	XC9274D06***-G XC9275D06***-G
E	XC9274E06***-G XC9275E06***-G

③ represents Oscillation Frequency

MARK	OSCILLATION FREQUENCY	PRODUCT SERIES
C	1.2MHz	XC9274***C**-G XC9275***C**-G
D	3.0MHz	XC9274***D**-G XC9275***D**-G

④,⑤ represents production lot number
01～09、0A～0Z、11～9Z、A1～A9、AA～AZ、B1～ZZ in order.
(G, I, J, O, Q, W excluded)
* No character inversion used.

1. The product and product specifications contained herein are subject to change without notice to improve performance characteristics. Consult us, or our representatives before use, to confirm that the information in this datasheet is up to date.

2. The information in this datasheet is intended to illustrate the operation and characteristics of our products. We neither make warranties or representations with respect to the accuracy or completeness of the information contained in this datasheet nor grant any license to any intellectual property rights of ours or any third party concerning with the information in this datasheet.

3. Applicable export control laws and regulations should be complied and the procedures required by such laws and regulations should also be followed, when the product or any information contained in this datasheet is exported.

4. The product is neither intended nor warranted for use in equipment of systems which require extremely high levels of quality and/or reliability and/or a malfunction or failure which may cause loss of human life, bodily injury, serious property damage including but not limited to devices or equipment used in 1) nuclear facilities, 2) aerospace industry, 3) medical facilities, 4) automobile industry and other transportation industry and 5) safety devices and safety equipment to control combustions and explosions. Do not use the product for the above use unless agreed by us in writing in advance.

5. Although we make continuous efforts to improve the quality and reliability of our products; nevertheless Semiconductors are likely to fail with a certain probability. So in order to prevent personal injury and/or property damage resulting from such failure, customers are required to incorporate adequate safety measures in their designs, such as system fail safes, redundancy and fire prevention features.

6. Our products are not designed to be Radiation-resistant.

7. Please use the product listed in this datasheet within the specified ranges.

8. We assume no responsibility for damage or loss due to abnormal use.

9. All rights reserved. No part of this datasheet may be copied or reproduced unless agreed by Torex Semiconductor Ltd in writing in advance.

TOREX SEMICONDUCTOR LTD.