MOSFET - N-Channel QFET®

600 V, 3.4 Ω, 3.0 A

FQP3N60C

General Description

This N−Channel enhancement mode power MOSFET is produced using ON Semiconductor's proprietary planar stripe and DMOS technology. This advanced MOSFET technology has been especially tailored to reduce on−state resistance, and to provide superior switching performance and high avalanche energy strength. These devices are suitable for switched mode power supplies, active power factor correction (PFC), and electronic lamp ballasts.

Features

- 3.0 A, 600 V, $R_{DS(on)}$ = 3.4 Ω (Max.) at V_{GS} = 10 V, I_D = 1.5 A
- Low Gate Charge (Typ. 10.5 nC)
- Low C_{rss} (Typ. 5.0 pF)
- 100% Avalanche Tested
- This is a Pb−Free Device

ABSOLUTE MAXIMUM RATINGS (T_C = 25°C unless otherwise noted)

Symbol	Parameter		Ratings	Unit
V_{DSS}	Drain−Source Voltage		600	V
V_{GSS}	Gate−Source Voltage		±30	V
I_D	Drain Current	Continuous (T_C = 25°C)	3	A
		Continuous (T_C = 100°C)	1.8	
I_{DM}	Drain Current	Pulsed (Note 1)	12	A
E_{AS}	Single Pulse Avalanche Energy (Note 2)		150	mJ
I_{AR}	Avalanche Current (Note 1)		3	A
E_{AR}	Repetitive Avalanche Energy (Note 1)		7.5	mJ
dv/dt	Peak Diode Recovery dv/dt (Note 3)		4.5	V/ns
P_D	Power Dissipation	(T_C = 25°C)	75	W
		Derate above 25°C	0.62	W/°C
T_J, T_{STG}	Operating and Storage Temperature Range		−55 to +150	°C
T_L	Maximum Lead Temperature for Soldering, 1/8″ from Case for 5 Seconds		300	°C

Stresses exceeding those listed in the Maximum Ratings table may damage the device. If any of these limits are exceeded, device functionality should not be assumed, damage may occur and reliability may be affected.

1. Repetitive rating: pulse−width limited by maximum junction temperature
2. L = 30 mH, I_{AS} = 3 A, V_{DD} = 50 V, R_G = 25 Ω, starting T_J = 25°C
3. I_{SD} ≤ 3 A, di/dt ≤ 200 A/μs, V_{DD} ≤ BV_{DSS}, starting T_J = 25°C

THERMAL CHARACTERITICS

Symbol	Parameter	Ratings	Unit
$R_{\theta JC}$	Maximum Thermal Resistance, Junction to Case	1.67	°C/W
$R_{\theta JA}$	Maximum Thermal Resistance, Junction to Ambient	62.5	°C/W

ON Semiconductor®

www.onsemi.com

V_{DS}	$R_{DS(ON)}$ MAX	I_D MAX
600 V	3.4 Ω @ 10 V	3.0 A

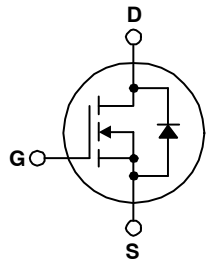

N−Channel MOSFET

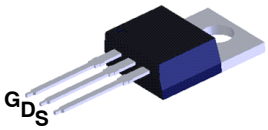

TO−220−3LD
CASE 340AT

MARKING DIAGRAM

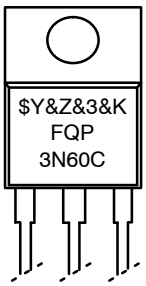

$Y	= ON Semiconductor Logo
&Z	= Assembly Plant Code
&3	= Data Code (Year & Week)
&K	= Lot Code
FQP3N60C	= Specific Device Code

ORDERING INFORMATION

Device	Package	Shipping
FQP3N60C	TO−220−3LD (Pb−Free)	50 Units/ Tube

© Semiconductor Components Industries, LLC, 2020

ELECTRICAL CHARACTERISTICS (T_C = 25°C unless otherwise noted)

Symbol	Parameter	Test Condition	Min.	Typ.	Max.	Unit
OFF CHARACTERISTICS						
BV_{DSS}	Drain to Source Breakdown Voltage	V_{GS} = 0 V, I_D = 250 μA	600	–	–	V
$\Delta BV_{DSS}/\Delta T_J$	Breakdown Voltage Temperature Coefficient	I_D = 250 μA, Referenced to 25°C	–	0.6	–	V/°C
I_{DSS}	Zero Gate Voltage Drain Current	V_{DS} = 600 V, V_{GS} = 0 V	–	–	1	μA
		V_{DS} = 480 V, T_C = 125 °C	–	–	10	
I_{GSSF}	Gate −Body Leakage Current, Forward	V_{GS} = 30 V, V_{DS} = 0 V	–	–	100	nA
I_{GSSR}	Gate −Body Leakage Current, Reverse	V_{GS} = −30 V, V_{DS} = 0 V			−100	nA
ON CHARACTERISTICS						
$V_{GS(th)}$	Gate Threshold Voltage	V_{GS} = V_{DS}, I_D = 250 μA	2.0	–	4.0	V
$R_{DS(on)}$	Static Drain−Source On−Resistance	V_{GS} = 10 V, I_D = 1.5 A	–	2.8	3.4	Ω
g_{FS}	Forward Transconductance	V_{DS} = 40 V, I_D = 1.5 A	–	3.5	–	S
DYNAMIC CHARACTERISTICS						
C_{iss}	Input Capacitance	V_{DS} = 25 V, V_{GS} = 0 V, f = 1.0 MHz	–	435	565	pF
C_{oss}	Output Capacitance		–	45	60	pF
C_{rss}	Reverse Transfer Capacitance		–	5	8	pF
SWITCHING CHARACTERISTICS						
$t_{d(on)}$	Turn-On Delay Time	V_{DD} = 300 V, I_D = 3 A, R_G = 25 Ω (Note 4)	–	12	34	ns
t_r	Turn−On Rise Time		–	30	70	ns
$t_{d(off)}$	Turn-Off Delay Time		–	35	80	ns
t_f	Turn−Off Fall Time		–	35	80	ns
Q_g	Total Gate Charge	V_{DS} = 480 V, I_D = 3 A, V_{GS} = 10 V (Note 4)	–	10.5	14	nC
Q_{gs}	Gate−Source Charge		–	2.1	–	nC
Q_{gd}	Gate−Drain Charge		–	4.5	–	nC
DRAIN-SOURCE DIODE CHARACTERISTICS AND MAXIMUM RATINGS						
I_S	Maximum Continuous Drain−Source Diode Forward Current		–	–	3	A
I_{SM}	Maximum Pulsed Drain−Source Diode Forward Current		–	–	12	A
V_{SD}	Drain−Source Diode Forward Voltage	V_{GS} = 0 V, I_S = 3 A	–	–	1.4	V
t_{rr}	Reverse Recovery Time	V_{GS} = 0 V, I_S = 3 A, dI_F/dt = 100 A/μs	–	260	–	ns
Q_{rr}	Reverse Recovery Charge		–	1.6	–	μC

Product parametric performance is indicated in the Electrical Characteristics for the listed test conditions, unless otherwise noted. Product performance may not be indicated by the Electrical Characteristics if operated under different conditions.

4. Essentially independent of operating temperature.

TYPICAL PERFORMANCE CHARACTERISTICS

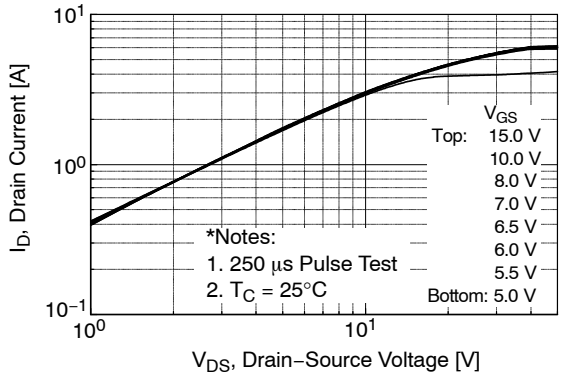

Figure 1. On−Region Characteristics

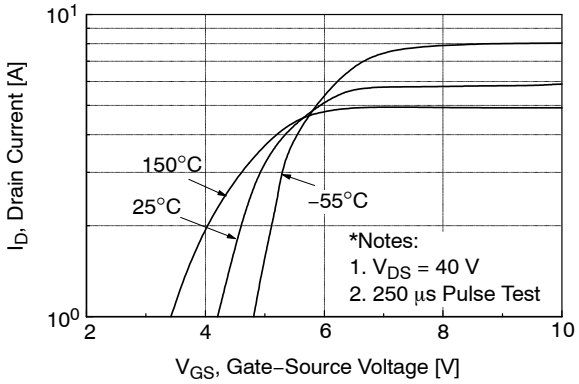

Figure 2. Transfer Characteristics

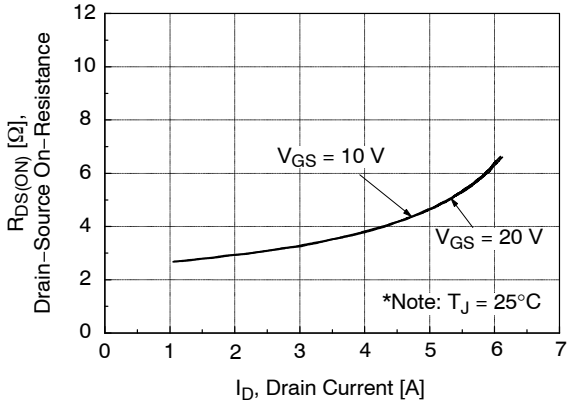

Figure 3. On−Resistance Variation vs. Drain Current and Gate Voltage

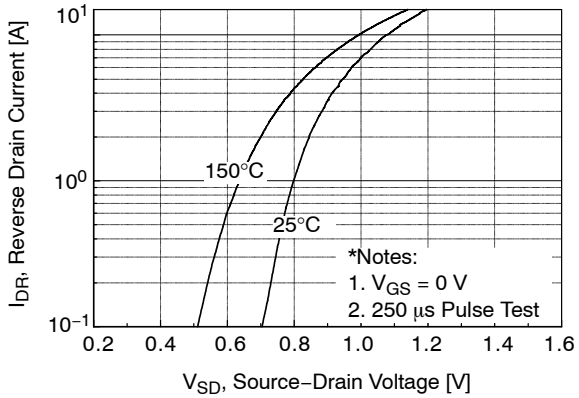

Figure 4. Body Diode Forward Voltage Variation vs. Source Current and Temperature

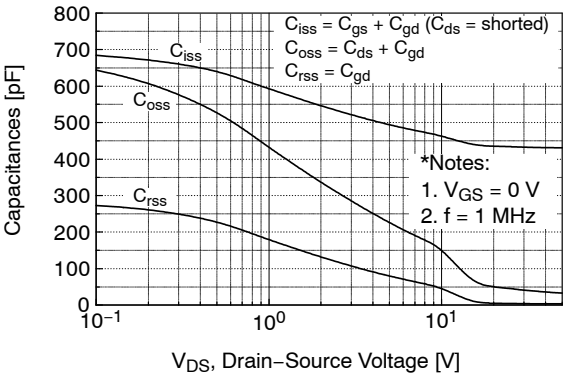

Figure 5. Capacitance Characteristics

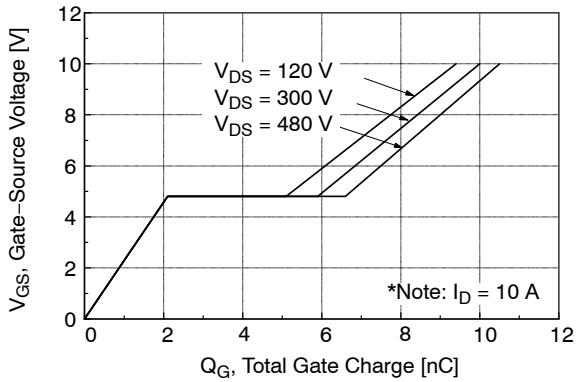

Figure 6. Gate Charge Characteristics

TYPICAL PERFORMANCE CHARACTERISTICS

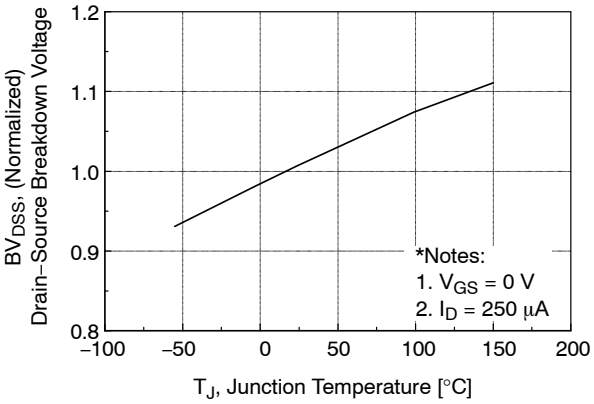

Figure 7. Breakdown Voltage Variation vs. Temperature

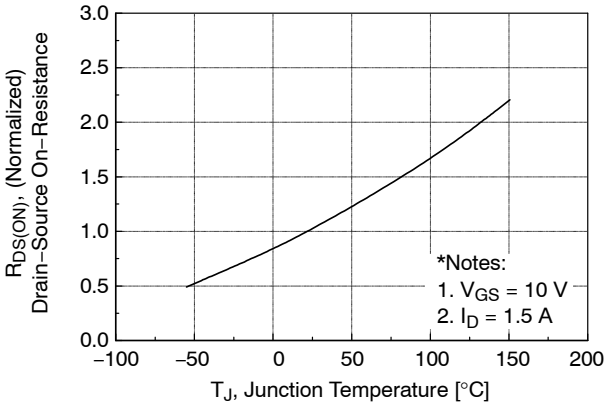

Figure 8. On−Resistance Variation vs. Temperature

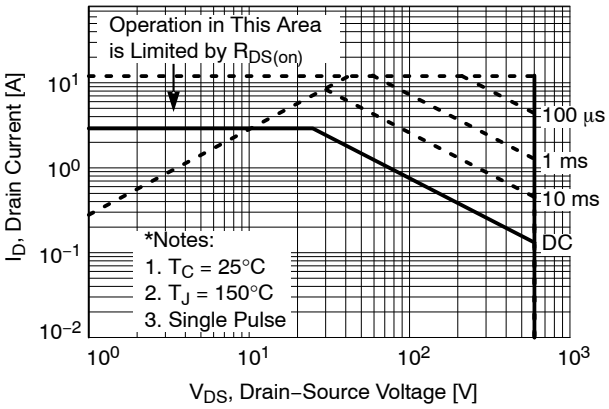

Figure 9. Maximum Safe Operating Area

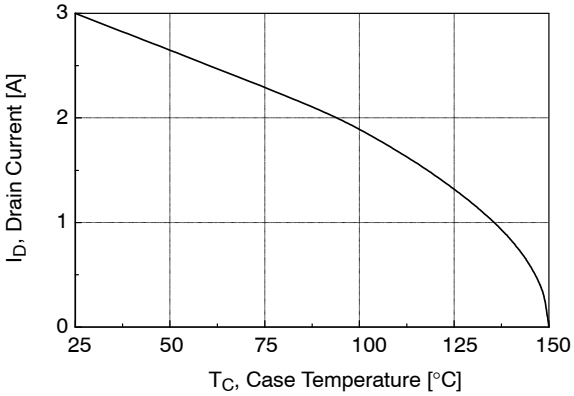

Figure 10. Maximum Drain Current vs. Case Temperature

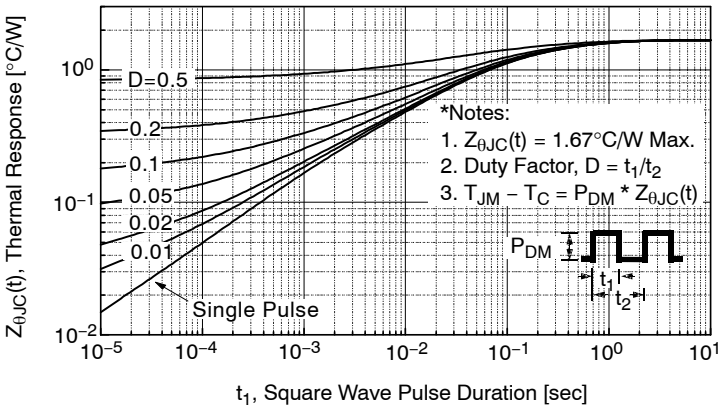

Figure 11. Transient Thermal Response Curve

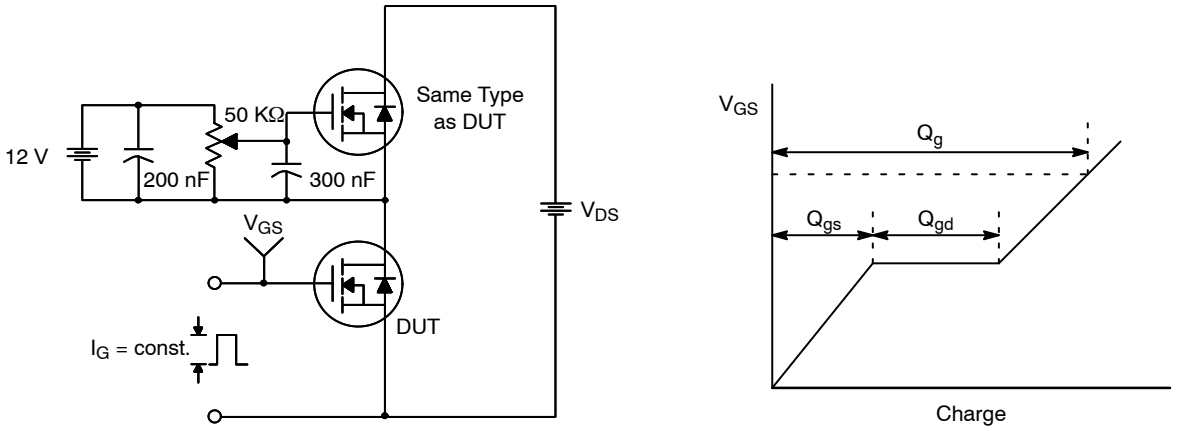

Figure 12. Gate Charge Test Circuit & Waveform

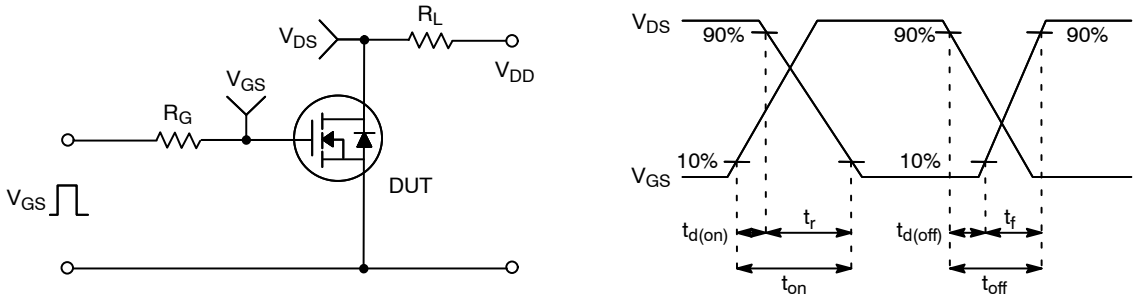

Figure 13. Resistive Switching Test Circuit & Waveforms

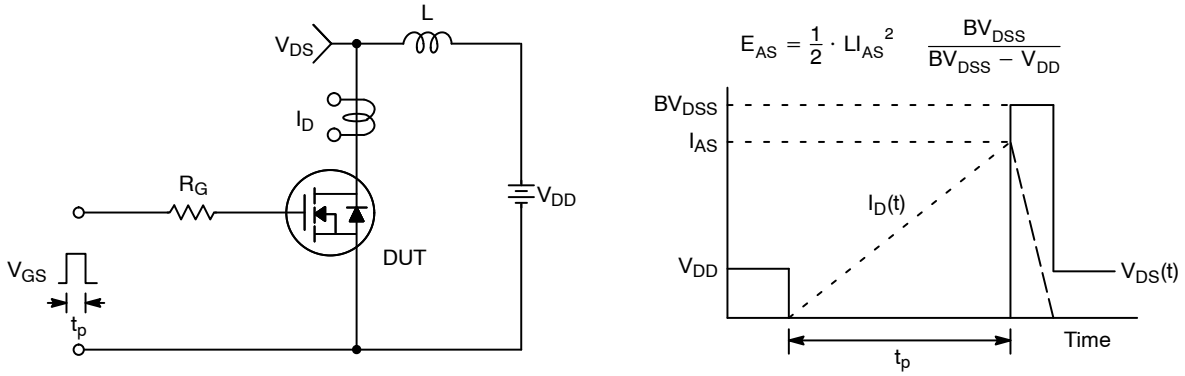

Figure 14. Unclamped Inductive Switching Test Circuit & Waveforms

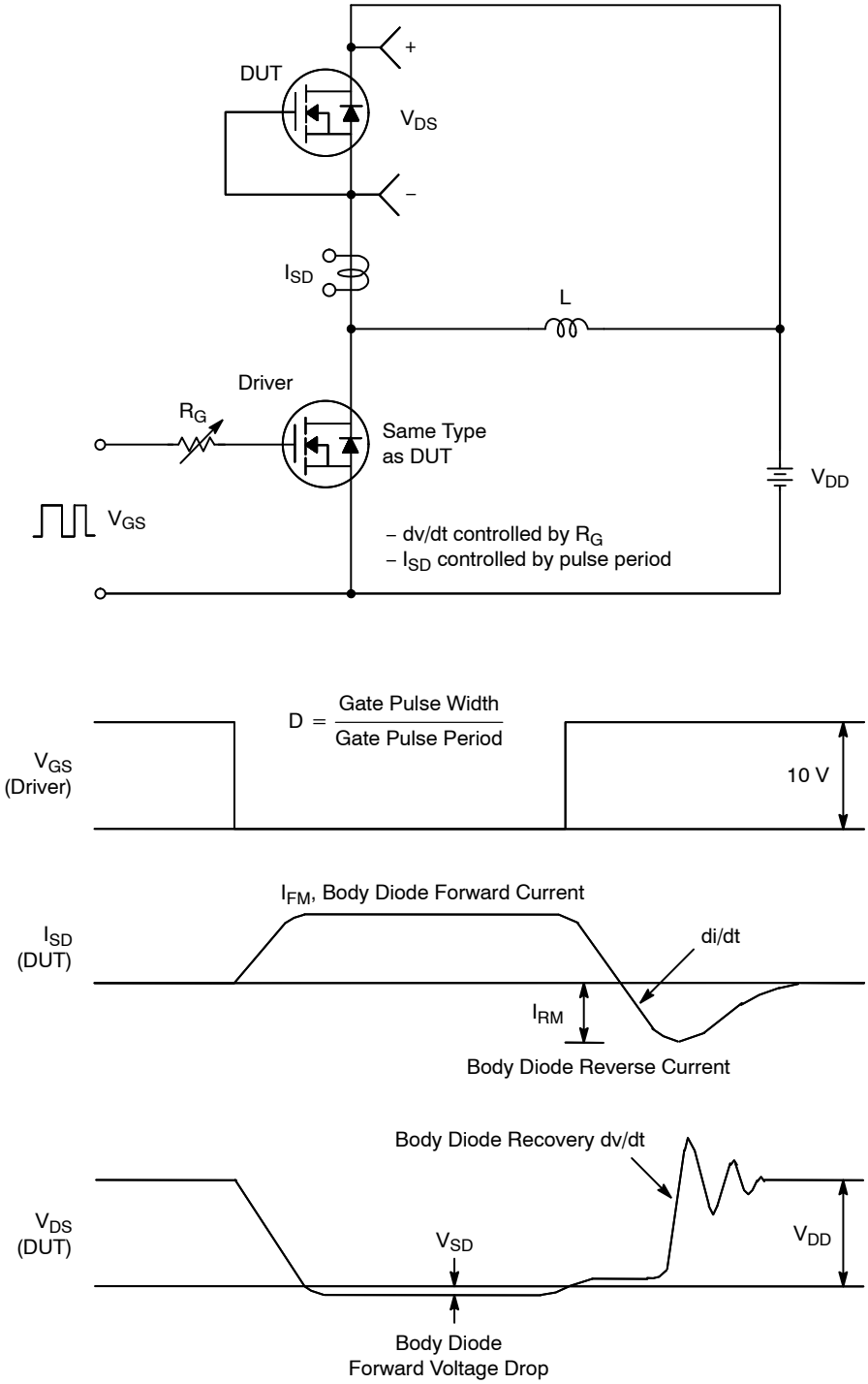

Figure 15. Peak Diode Recovery dv/dt Test Circuit & Waveforms

QFET is a registered trademark of Semiconductor Components Industries, LLC (SCILLC) or its subsidiaries in the United States and/or other countries.

TO−220−3LD
CASE 340AT
ISSUE A

DATE 03 OCT 2017

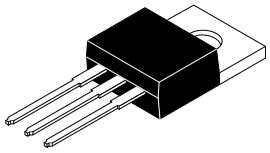

Scale 1:1

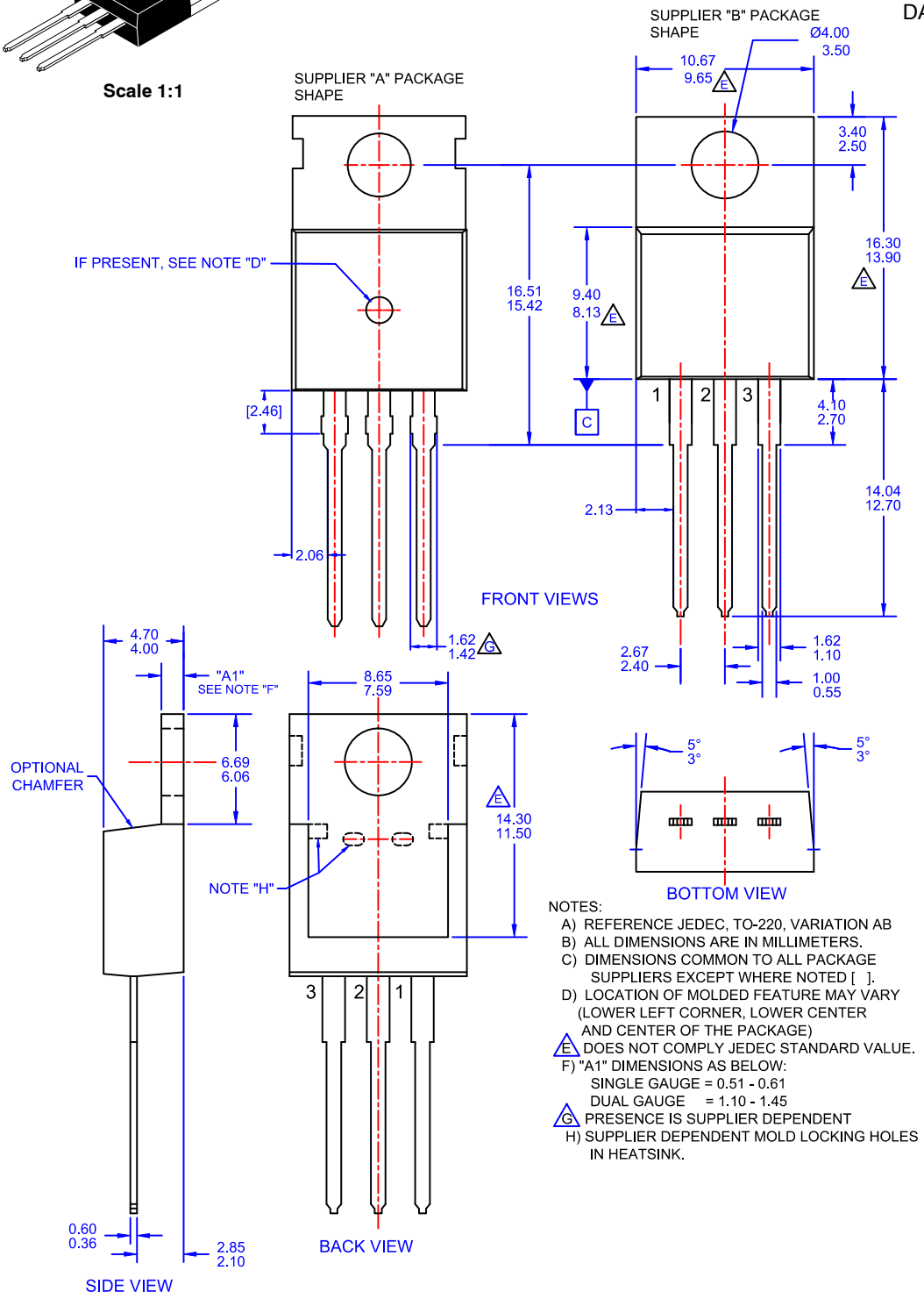

NOTES:
A) REFERENCE JEDEC, TO-220, VARIATION AB
B) ALL DIMENSIONS ARE IN MILLIMETERS.
C) DIMENSIONS COMMON TO ALL PACKAGE SUPPLIERS EXCEPT WHERE NOTED [ ].
D) LOCATION OF MOLDED FEATURE MAY VARY (LOWER LEFT CORNER, LOWER CENTER AND CENTER OF THE PACKAGE)
E) DOES NOT COMPLY JEDEC STANDARD VALUE.
F) "A1" DIMENSIONS AS BELOW:
SINGLE GAUGE = 0.51 - 0.61
DUAL GAUGE = 1.10 - 1.45
G) PRESENCE IS SUPPLIER DEPENDENT
H) SUPPLIER DEPENDENT MOLD LOCKING HOLES IN HEATSINK.

DOCUMENT NUMBER:	**98AON13818G**	Electronic versions are uncontrolled except when accessed directly from the Document Repository. Printed versions are uncontrolled except when stamped "CONTROLLED COPY" in red.
DESCRIPTION:	**TO−220−3LD**	**PAGE 1 OF 1**

ON Semiconductor and ON are trademarks of Semiconductor Components Industries, LLC dba ON Semiconductor or its subsidiaries in the United States and/or other countries. ON Semiconductor reserves the right to make changes without further notice to any products herein. ON Semiconductor makes no warranty, representation or guarantee regarding the suitability of its products for any particular purpose, nor does ON Semiconductor assume any liability arising out of the application or use of any product or circuit, and specifically disclaims any and all liability, including without limitation special, consequential or incidental damages. ON Semiconductor does not convey any license under its patent rights nor the rights of others.

onsemi, onsemi, and other names, marks, and brands are registered and/or common law trademarks of Semiconductor Components Industries, LLC dba "**onsemi**" or its affiliates and/or subsidiaries in the United States and/or other countries. **onsemi** owns the rights to a number of patents, trademarks, copyrights, trade secrets, and other intellectual property. A listing of **onsemi**'s product/patent coverage may be accessed at www.onsemi.com/site/pdf/Patent−Marking.pdf. **onsemi** reserves the right to make changes at any time to any products or information herein, without notice. The information herein is provided "as−is" and **onsemi** makes no warranty, representation or guarantee regarding the accuracy of the information, product features, availability, functionality, or suitability of its products for any particular purpose, nor does **onsemi** assume any liability arising out of the application or use of any product or circuit, and specifically disclaims any and all liability, including without limitation special, consequential or incidental damages. Buyer is responsible for its products and applications using **onsemi** products, including compliance with all laws, regulations and safety requirements or standards, regardless of any support or applications information provided by **onsemi**. "Typical" parameters which may be provided in **onsemi** data sheets and/or specifications can and do vary in different applications and actual performance may vary over time. All operating parameters, including "Typicals" must be validated for each customer application by customer's technical experts. **onsemi** does not convey any license under any of its intellectual property rights nor the rights of others. **onsemi** products are not designed, intended, or authorized for use as a critical component in life support systems or any FDA Class 3 medical devices or medical devices with a same or similar classification in a foreign jurisdiction or any devices intended for implantation in the human body. Should Buyer purchase or use **onsemi** products for any such unintended or unauthorized application, Buyer shall indemnify and hold **onsemi** and its officers, employees, subsidiaries, affiliates, and distributors harmless against all claims, costs, damages, and expenses, and reasonable attorney fees arising out of, directly or indirectly, any claim of personal injury or death associated with such unintended or unauthorized use, even if such claim alleges that **onsemi** was negligent regarding the design or manufacture of the part. **onsemi** is an Equal Opportunity/Affirmative Action Employer. This literature is subject to all applicable copyright laws and is not for resale in any manner.

PUBLICATION ORDERING INFORMATION

LITERATURE FULFILLMENT:
Email Requests to: orderlit@onsemi.com

onsemi Website: www.onsemi.com

TECHNICAL SUPPORT
North American Technical Support:
Voice Mail: 1 800−282−9855 Toll Free USA/Canada
Phone: 011 421 33 790 2910

Europe, Middle East and Africa Technical Support:
Phone: 00421 33 790 2910
For additional information, please contact your local Sales Representative

◊