This document was generated on 11/04/2021

PLEASE CHECK WWW.MOLEX.COM FOR LATEST PART INFORMATION

Part Number: 0395224009
Status: Active
Overview: Eurostyle Terminal Blocks
Description: 5.00mm Pitch Eurostyle Horizontal PCB Header, Surface Mount Compatible, 9 Circuits

Documents:
3D Model
3D Model (PDF)
Drawing (PDF)
Product Specification PS-39500-001-001 (PDF)
RoHS Certificate of Compliance (PDF)

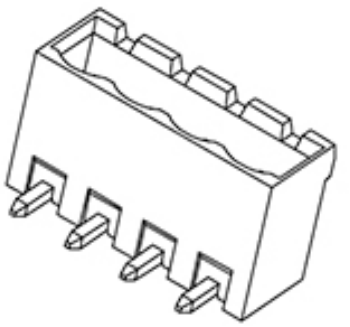

Series image - Reference only

Agency Certification

UL	E48521

General

Product Family	Terminal Blocks
Series	39522
Application	N/A
Component Type	PCB Header
Overview	Eurostyle Terminal Blocks
Product Name	ESE, Eurostyle Pluggable
Type	Euro Block
UPC	822350444439

Physical

Circuits (Loaded)	9
Entry Angle	N/A
Lock to Mating Part	Yes
Number of Rows	1
Orientation	Horizontal
PC Tail Length	3.90mm
PCB Thickness - Recommended	3.20mm
Panel Mount	No
Pitch - Mating Interface	5.00mm
Pitch - Termination Interface	5.00mm
Polarized to Mating Part	Yes
Shrouded	Closed Ends
Stackable	No
Surface Mount Compatible (SMC)	Yes
Temperature Range - Operating	-40° to +140°C
Wire Size AWG	N/A

Electrical

Current - Maximum per Contact	15.0A
Voltage - Maximum	300V

Solder Process Data

Lead-freeProcess Capability	N/A

Material Info

Reference - Drawing Numbers

Product Specification	PS-39500-001-001
Sales Drawing	SD-39522-001-001

EU ELV
Not Relevant

EU RoHS | **China RoHS**
Not Reviewed

REACH SVHC
Not Contained Per - ED/30/2017 (7 July 2017)

Halogen-Free Status
Low-Halogen

For more information, please visit Contact US

China ROHS	Green Image
ELV	Not Relevant
RoHS Phthalates	Not Contained

Search Parts in this Series
39522 Series

Mates With
39520 Horizontal Plug, 39523 Vertical Plug, Most 5.00mm Pitch Industry Standard Plugs

This document was generated on 11/04/2021

PLEASE CHECK WWW.MOLEX.COM FOR LATEST PART INFORMATION