Rectifier – STEALTH™ II
8 A, 600 V

FFD08S60S-F085

The FFD08S60S−F085 is stealth 2 rectifier with soft recovery characteristics (t_{rr} < 30 ns). They has half the recovery time of hyperfast rectifier and are silicon nitride passivated ion−implanted epitaxial planar construction. This device is intended for use as freewheeling of boost diode in switching power supplies and other power switching applications. Their low stored charge and hyperfast soft recovery minimize ringing and electrical noise in many power switching circuits reducing power loss in the switching transistors.

Features
- High Speed Switching (Max. t_{rr} < 30 ns @ I_F = 8 A)
- High Reverse Voltage and High Reliability
- Avalanche Energy Rated
- AEC−Q101 Qualified and PPAP Capable
- Pb−Free and RoHS Compliant

Applications
- General Purpose
- Switching Mode Power Supply
- Boost Diode in Continuous Mode Power Factor Corrections
- Power Switching Circuits

ABSOLUTE MAXIMUM RATINGS (T_C = 25°C unless otherwise noted)

Symbol	Parameter	Ratings	Unit
V_{RRM}	Peak Repetitive Reverse Voltage	600	V
V_{RWM}	Working Peak Reverse Voltage	600	V
V_R	DC Blocking Voltage	600	V
$I_{F(AV)}$	Average Rectified Forward Current @ T_C = 115°C	8	A
I_{FSM}	Non−repetitive Peak Surge Current 60 Hz Single Half−Sine Wave	80	A
T_J, T_{STG}	Operating Junction and Storage Temperature	−65 to + 150	°C

Stresses exceeding those listed in the Maximum Ratings table may damage the device. If any of these limits are exceeded, device functionality should not be assumed, damage may occur and reliability may be affected.

THERMAL CHARACTERISTICS (T_C = 25°C unless otherwise noted)

Symbol	Parameter	Ratings	Unit
$R_{\theta JC}$	Maximum Thermal Resistance, Junction to Case	3.0	°C/W

ON Semiconductor®

www.onsemi.com

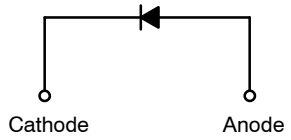

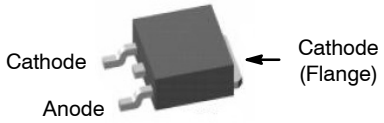

DPAK3
CASE 369AS

MARKING DIAGRAM

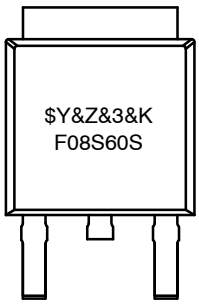

$Y	= ON Semiconductor Logo
&Z	= Assembly Plant Code
&3	= Numeric Date Code
&K	= Lot Code
F08S60S	= Specific Device Code

ORDERING INFORMATION

Device	Package	Shipping
FFD08S60−F085	DPAK3 (Pb−Free)	2500 / Tape & Reel

†For information on tape and reel specifications, including part orientation and tape sizes, please refer to our Tape and Reel Packaging Specification Brochure, BRD8011/D.

© Semiconductor Components Industries, LLC, 2010

ELECTRICAL CHARACTERISTICS (T_C = 25°C unless otherwise noted)

Symbol	Parameter	Test Conditions	Min	Typ	Max	Unit
V_{FM} (Note 1)	I_F = 8 A, I_F = 8 A	T_C = 25°C T_C = 125°C	– –	2.1 1.6	2.6 –	V
I_{RM} (Note 1)	V_R = 600 V, V_R = 600 V	T_C = 25°C T_C = 125°C	– –	– –	100 500	μA
t_{rr}	I_F = 1 A, di/dt = 100 A/μs, V_R = 30 V	T_C = 25°C	–	–	25	ns
t_{rr}	I_F = 8 A, di/dt = 200 A/μs, V_R = 390 V	T_C = 25°C	–	19	30	ns
I_{rr}			–	2.2	–	A
S factor			–	0.6	–	
Q_{rr}			–	21	–	nC
t_{rr}	I_F = 8 A, di/dt = 200 A/μs, V_R = 390 V	T_C = 125°C	–	58	–	ns
I_{rr}			–	4.3	–	A
S factor			–	1.3	–	
Q_{rr}			–	125	–	nC
W_{AVL}	Avalanche Energy (L = 40 mH)		20	–	–	mJ

Product parametric performance is indicated in the Electrical Characteristics for the listed test conditions, unless otherwise noted. Product performance may not be indicated by the Electrical Characteristics if operated under different conditions.

1. Pulse: Test Pulse width = 300 μs, Duty Cycle = 2%.

TEST CIRCUIT AND WAVEFORMS

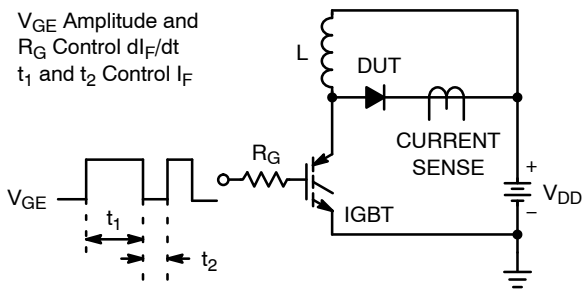

Figure 1. t_{rr} Test Circuit

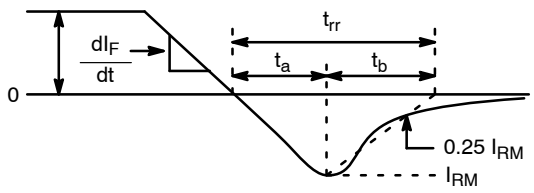

Figure 2. t_{rr} Waveform and Definitions

I_{MAX} = 1 A
L = 40 mH
R < 0.1 Ω
V_{DD} = 50 V
$E_{AVL} = 1/2LI^2 [V_{R(AVL)} / (V_{R(AVL)} - V_{DD})]$
Q_1 = IGBT (BV_{CES} > DUT $V_{R(AVL)}$)

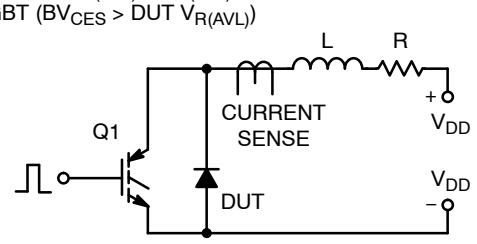

Figure 3. Avalanche Energy Test Circuit

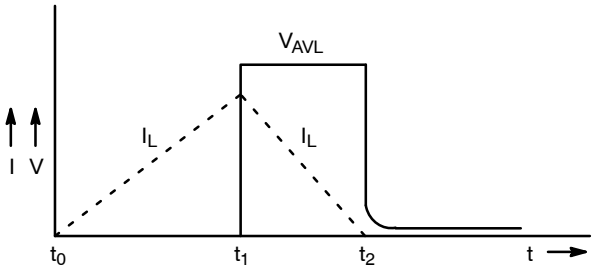

Figure 4. Avalanche Current and Voltage Waveforms

TYPICAL CHARACTERISTICS

(T_C = 25°C unless otherwise noted)

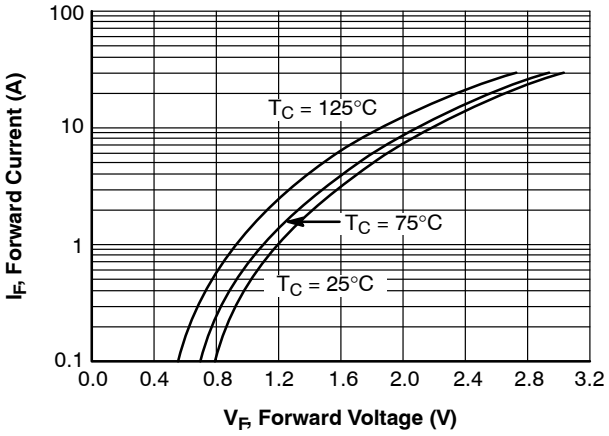

Figure 5. Typical Forward Voltage Drop

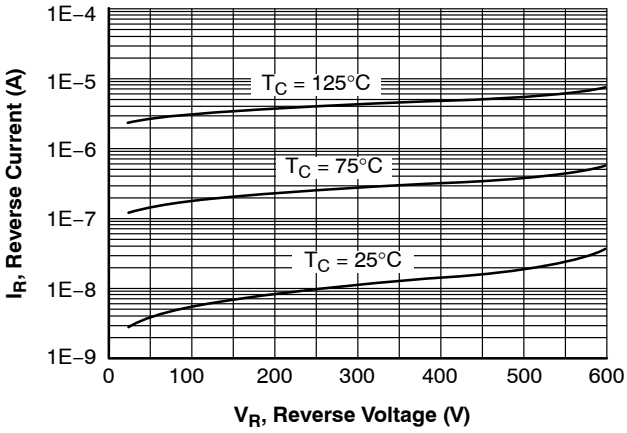

Figure 6. Typical Reverse Current

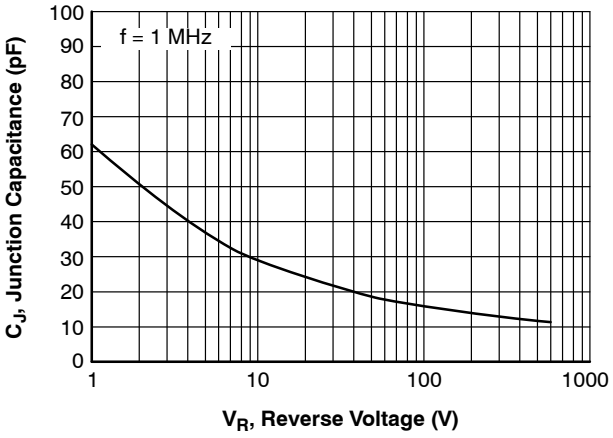

Figure 7. Typical Junction Capacitance

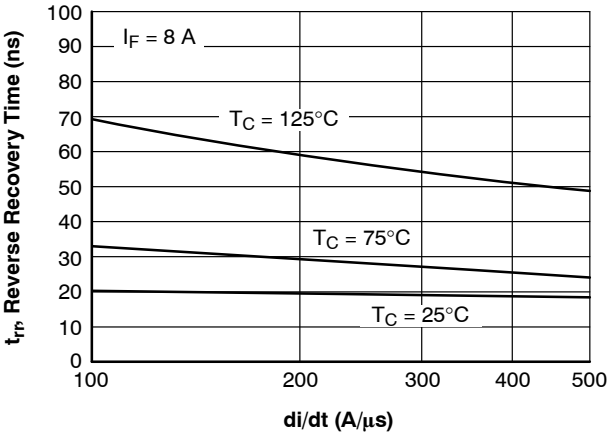

Figure 8. Typical Reverse Recovery Time

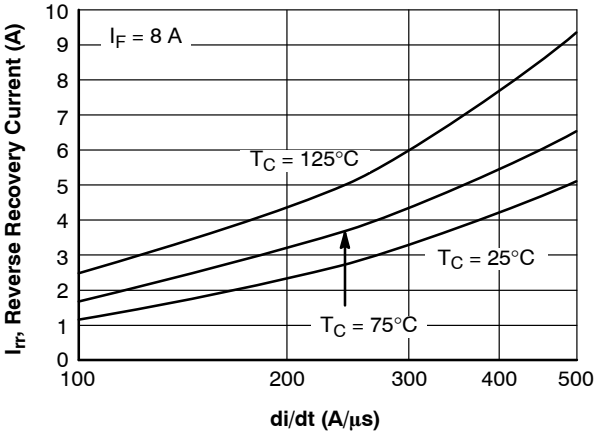

Figure 9. Typical Reverse Recovery Current

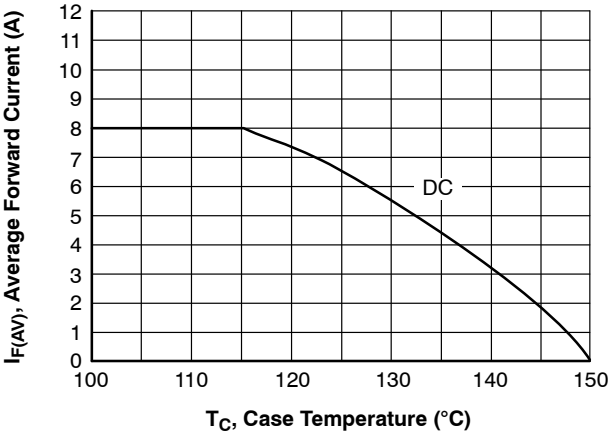

Figure 10. Forward Current Deration Curve

STEALTH is a trademark of Semiconductor Components Industries, LLC (SCILLC) or its subsidiaries in the United States and/or other countries.

DPAK3 (TO−252 3 LD)
CASE 369AS
ISSUE O

DATE 30 SEP 2016

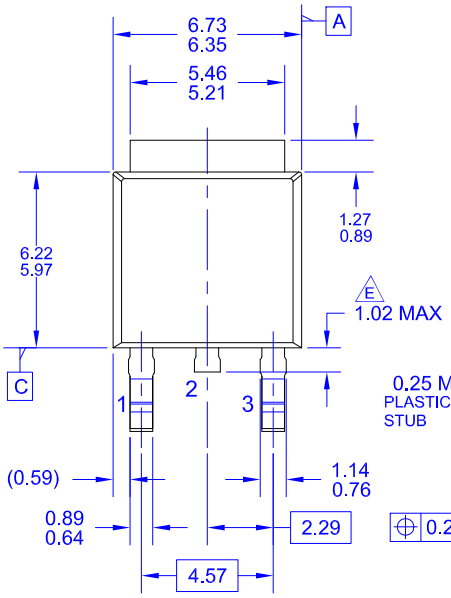

NON-DIODE PRODUCTS VERSION

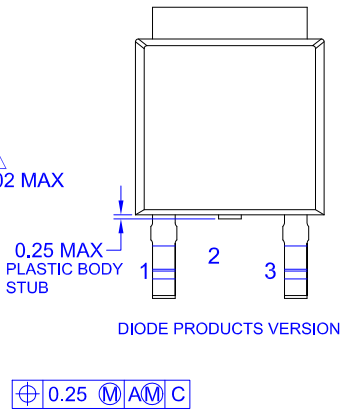

DIODE PRODUCTS VERSION

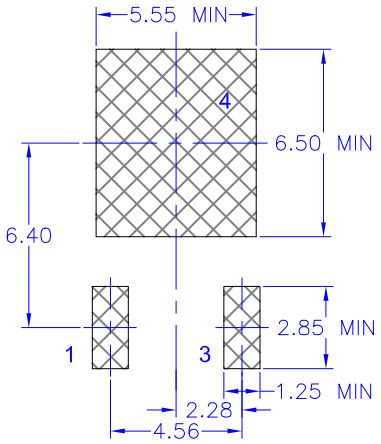

LAND PATTERN RECOMMENDATION

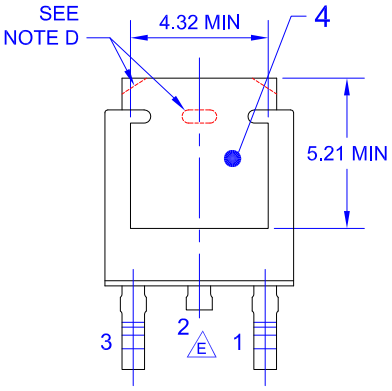

NON-DIODE PRODUCTS VERSION

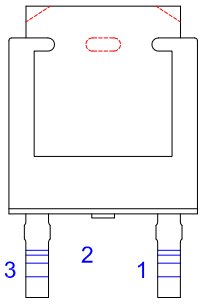

DIODE PRODUCTS VERSION

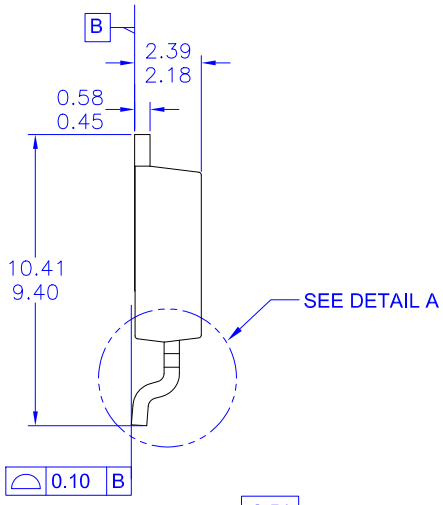

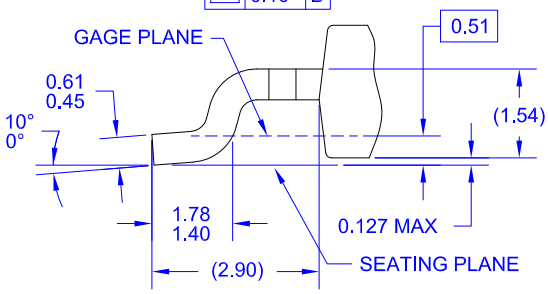

DETAIL A
(ROTATED -90°)
SCALE: 12X

NOTES: UNLESS OTHERWISE SPECIFIED
A) THIS PACKAGE CONFORMS TO JEDEC, TO-252, ISSUE C, VARIATION AA.
B) ALL DIMENSIONS ARE IN MILLIMETERS.
C) DIMENSIONING AND TOLERANCING PER ASME Y14.5M-2009.
D) SUPPLIER DEPENDENT MOLD LOCKING HOLES OR CHAMFERED CORNERS OR EDGE PROTRUSION.
E) TRIMMED CENTER LEAD IS PRESENT ONLY FOR DIODE PRODUCTS
F) DIMENSIONS ARE EXCLUSSIVE OF BURSS, MOLD FLASH AND TIE BAR EXTRUSIONS.
G) LAND PATTERN RECOMENDATION IS BASED ON IPC7351A STD TO228P991X239-3N.

DOCUMENT NUMBER:	**98AON13810G**	Electronic versions are uncontrolled except when accessed directly from the Document Repository. Printed versions are uncontrolled except when stamped "CONTROLLED COPY" in red.
DESCRIPTION:	**DPAK3 (TO−252 3 LD)**	**PAGE 1 OF 1**

ON Semiconductor and ON are trademarks of Semiconductor Components Industries, LLC dba ON Semiconductor or its subsidiaries in the United States and/or other countries. ON Semiconductor reserves the right to make changes without further notice to any products herein. ON Semiconductor makes no warranty, representation or guarantee regarding the suitability of its products for any particular purpose, nor does ON Semiconductor assume any liability arising out of the application or use of any product or circuit, and specifically disclaims any and all liability, including without limitation special, consequential or incidental damages. ON Semiconductor does not convey any license under its patent rights nor the rights of others.

© Semiconductor Components Industries, LLC, 2019

onsemi, onsemi, and other names, marks, and brands are registered and/or common law trademarks of Semiconductor Components Industries, LLC dba "**onsemi**" or its affiliates and/or subsidiaries in the United States and/or other countries. **onsemi** owns the rights to a number of patents, trademarks, copyrights, trade secrets, and other intellectual property. A listing of **onsemi**'s product/patent coverage may be accessed at www.onsemi.com/site/pdf/Patent−Marking.pdf. **onsemi** reserves the right to make changes at any time to any products or information herein, without notice. The information herein is provided "as−is" and **onsemi** makes no warranty, representation or guarantee regarding the accuracy of the information, product features, availability, functionality, or suitability of its products for any particular purpose, nor does **onsemi** assume any liability arising out of the application or use of any product or circuit, and specifically disclaims any and all liability, including without limitation special, consequential or incidental damages. Buyer is responsible for its products and applications using **onsemi** products, including compliance with all laws, regulations and safety requirements or standards, regardless of any support or applications information provided by **onsemi**. "Typical" parameters which may be provided in **onsemi** data sheets and/or specifications can and do vary in different applications and actual performance may vary over time. All operating parameters, including "Typicals" must be validated for each customer application by customer's technical experts. **onsemi** does not convey any license under any of its intellectual property rights nor the rights of others. **onsemi** products are not designed, intended, or authorized for use as a critical component in life support systems or any FDA Class 3 medical devices or medical devices with a same or similar classification in a foreign jurisdiction or any devices intended for implantation in the human body. Should Buyer purchase or use **onsemi** products for any such unintended or unauthorized application, Buyer shall indemnify and hold **onsemi** and its officers, employees, subsidiaries, affiliates, and distributors harmless against all claims, costs, damages, and expenses, and reasonable attorney fees arising out of, directly or indirectly, any claim of personal injury or death associated with such unintended or unauthorized use, even if such claim alleges that **onsemi** was negligent regarding the design or manufacture of the part. **onsemi** is an Equal Opportunity/Affirmative Action Employer. This literature is subject to all applicable copyright laws and is not for resale in any manner.

PUBLICATION ORDERING INFORMATION

LITERATURE FULFILLMENT:
Email Requests to: orderlit@onsemi.com

onsemi Website: www.onsemi.com

TECHNICAL SUPPORT
North American Technical Support:
Voice Mail: 1 800−282−9855 Toll Free USA/Canada
Phone: 011 421 33 790 2910

Europe, Middle East and Africa Technical Support:
Phone: 00421 33 790 2910
For additional information, please contact your local Sales Representative

◊