ADS7138 Small, 8-Channel, 12-Bit ADC With I²C Interface, GPIOs, and CRC

1 Features

- Small package size:
  - 3-mm × 3-mm WQFN
- 8 channels configurable as any combination of:
  - Up to 8 analog inputs, digital inputs, or digital outputs
- GPIOs for I/O expansion:
  - Open-drain, push-pull digital outputs
- Analog watchdog:
  - Programmable thresholds per channel
  - Event counter for transient rejection
- Wide operating ranges:
  - AVDD: 2.35 V to 5.5 V
  - DVDD: 1.65 V to 5.5 V
  - –40°C to +125°C temperature range
- CRC for read/write operations:
  - CRC on data read/write
  - CRC on power-up configuration
- I²C interface:
  - Up to 3.4 MHz (high-speed mode)
  - 8 configurable I²C addresses
- Programmable averaging filters:
  - Programmable sample size for averaging
  - Averaging with internal conversions
  - 16-bit resolution for average output

2 Applications

- Automotive center information displays
- Mobile robot CPU boards
- Rack servers
- Intra-DC interconnect (metro)

3 Description

The ADS7138 is an easy-to-use, 8-channel, multiplexed, 12-bit, successive approximation register analog-to-digital converter (SAR ADC). The eight channels can be independently configured as either analog inputs, digital inputs, or digital outputs. The device has an internal oscillator for ADC conversion processes.

The ADS7138 communicates via an I²C-compatible interface and operates in either autonomous or single-shot conversion mode. The ADS7138 implements analog watchdog function by event-triggered interrupts per channel using a digital window comparator with programmable high and low thresholds, hysteresis, and an event counter. The ADS7138 has a built-in cyclic redundancy check (CRC) for data read/write operations and the power-up configuration.

Device Information(1)

PART NAME	PACKAGE	BODY SIZE (NOM)
ADS7138	WQFN (16)	3.00 mm × 3.00 mm

(1) For all available packages, see the orderable addendum at the end of the datasheet.

ADS7138 Block Diagram and Applications

Device Block Diagram

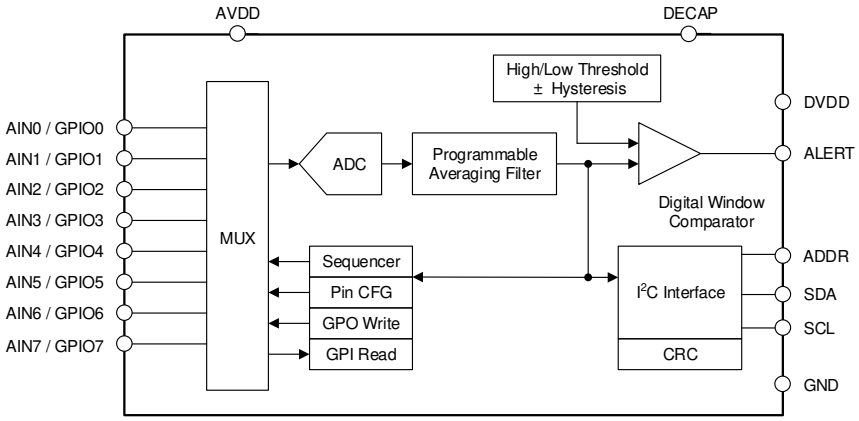

Example System Architecture

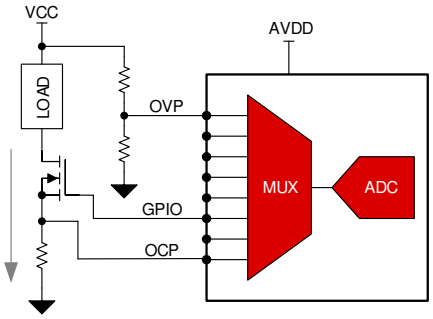

OVP: Over voltage protection
OCP: Over current protection

An IMPORTANT NOTICE at the end of this data sheet addresses availability, warranty, changes, use in safety-critical applications, intellectual property matters and other important disclaimers. PRODUCTION DATA.

Table of Contents

1 Features ... 1
2 Applications ... 1
3 Description ... 1
4 Revision History ... 2
5 Device Comparison Table ... 3
6 Pin Configuration and Functions ... 4
7 Specifications ... 5
7.1 Absolute Maximum Ratings ... 5
7.2 ESD Ratings ... 5
7.3 Recommended Operating Conditions ... 5
7.4 Thermal Information ... 5
7.5 Electrical Characteristics ... 6
7.6 I^2C Timing Requirements ... 7
7.7 Timing Requirements ... 7
7.8 I^2C Switching Characteristics ... 7
7.9 Switching Characteristics ... 8
7.10 Typical Characteristics ... 9
8 Detailed Description ... 13
8.1 Overview ... 13
8.2 Functional Block Diagram ... 13
8.3 Feature Description ... 14
8.4 Device Functional Modes ... 22
8.5 Programming ... 26
8.6 ADS7138 Registers ... 29
9 Application and Implementation ... 69
9.1 Application Information ... 69
9.2 Typical Applications ... 69
10 Power Supply Recommendations ... 72
10.1 AVDD and DVDD Supply Recommendations ... 72
11 Layout ... 73
11.1 Layout Guidelines ... 73
11.2 Layout Example ... 73
12 Device and Documentation Support ... 74
12.1 Receiving Notification of Documentation Updates 74
12.2 Support Resources ... 74
12.3 Trademarks ... 74
12.4 Electrostatic Discharge Caution ... 74
12.5 Glossary ... 74
13 Mechanical, Packaging, and Orderable Information ... 74

4 Revision History

NOTE: Page numbers for previous revisions may differ from page numbers in the current version.

Changes from Original (May 2019) to Revision A	Page
• Changed document status from advance information to production data	1

Copyright © 2019–2020, Texas Instruments Incorporated

5 Device Comparison Table

PART NUMBER	DESCRIPTION	CRC MODULE	ZERO-CROSSING-DETECT (ZCD) MODULE	ROOT-MEAN-SQUARE (RMS) MODULE
ADS7128	8-channel, 12-bit ADC with I^2C interface and GPIOs	Yes	Yes	Yes
ADS7138		Yes	No	No
ADS7138-Q1		Yes	No	No

6 Pin Configuration and Functions

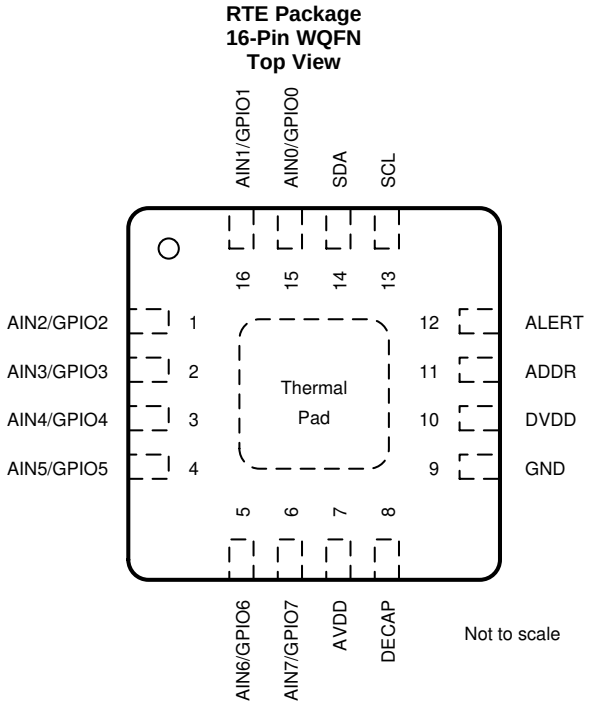

Pin Functions

PIN		FUNCTION(1)	DESCRIPTION
NAME	NO.		
AIN0/GPIO0	15	AI, DI, DO	Channel 0; configurable as either an analog input (default) or a general-purpose input/output (GPIO)
AIN1/GPIO1	16	AI, DI, DO	Channel 1; configurable as either an analog input (default) or a GPIO
AIN2/GPIO2	1	AI, DI, DO	Channel 2; configurable as either an analog input (default) or a GPIO
AIN3/GPIO3	2	AI, DI, DO	Channel 3; configurable as either an analog input (default) or a GPIO
AIN4/GPIO4	3	AI, DI, DO	Channel 4; configurable as either an analog input (default) or a GPIO
AIN5/GPIO5	4	AI, DI, DO	Channel 5; configurable as either an analog input (default) or a GPIO
AIN6/GPIO6	5	AI, DI, DO	Channel 6; configurable as either an analog input (default) or a GPIO
AIN7/GPIO7	6	AI, DI, DO	Channel 7; configurable as either an analog input (default) or a GPIO
ADDR	11	AI	Input for selecting the device I^2C address. Connect a resistor to this pin from DECAP pin or GND to select one of the eight addresses.
ALERT	12	Digital output	Open-drain (default) or push-pull output for the digital comparator
AVDD	7	Supply	Analog supply input, also used as the reference voltage to the ADC; connect a 1-µF decoupling capacitor to GND
DECAP	8	Supply	Connect a1-µF decoupling capacitor between the DECAP and GND pins for the internal power supply
DVDD	10	Supply	Digital I/O supply voltage; connect a 1-µF decoupling capacitor to GND
GND	9	Supply	Ground for the power supply; all analog and digital signals are referred to this pin voltage
SDA	14	DI, DO	Serial data input or output for the I^2C interface
SCL	13	DI	Serial clock for the I^2C interface
Thermal pad	—	Supply	Exposed thermal pad; connect to GND.

(1) AI = analog input, DI = digital input, and DO = digital output.

Copyright © 2019–2020, Texas Instruments Incorporated

7 Specifications

7.1 Absolute Maximum Ratings

over operating ambient temperature range (unless otherwise noted)[1]

	MIN	MAX	UNIT
DVDD to GND	–0.3	5.5	V
AVDD to GND	–0.3	5.5	V
AINx/GPOx[2]	GND – 0.3	AVDD + 0.3	V
ADDR	GND – 0.3	2.1	V
Digital inputs	GND – 0.3	5.5	V
Current through any pin except supply pins[3]	–10	10	mA
Junction temperature, T_J	–40	125	°C
Storage temperature, T_{stg}	–60	150	°C

(1) Stresses beyond those listed under *Absolute Maximum Rating* may cause permanent damage to the device. These are stress ratings only, which do not imply functional operation of the device at these or any other conditions beyond those indicated under *Recommended Operating Condition*. Exposure to absolute-maximum-rated conditions for extended periods may affect device reliability.
(2) AINx/GPIOx refers to pins 1, 2, 3, 4, 5, 6, 15, and 16.
(3) Pin current must be limited to 10mA or less.

7.2 ESD Ratings

			VALUE	UNIT
$V_{(ESD)}$	Electrostatic discharge	Human body model (HBM), per ANSI/ESDA/JEDEC JS-001, all pins[1]	±2000	V
		Charged device model (CDM), per JEDEC specification JESD22-C101, all pins[2]	±500	

(1) JEDEC document JEP155 states that 500-V HBM allows safe manufacturing with a standard ESD control process.
(2) JEDEC document JEP157 states that 250-V CDM allows safe manufacturing with a standard ESD control process.

7.3 Recommended Operating Conditions

over operating free-air temperature range (unless otherwise noted)

PARAMETER		TEST CONDITIONS	MIN	TYP	MAX	UNIT
POWER SUPPLY						
AVDD	Analog supply voltage		2.35	3.3	5.5	V
DVDD	Digital supply voltage		1.65	3.3	5.5	V
ANALOG INPUTS						
FSR	Full-scale input range	AIN_X[1] - GND	0		AVDD	V
V_{IN}	Absolute input voltage	AIN_X - GND	–0.1		AVDD + 0.1	V
TEMPERATURE RANGE						
T_A	Ambient temperature		–40	25	125	℃

(1) AINx refers to AIN0, AIN1, AIN2, AIN3, AIN4, AIN5, AIN6, and AIN7.

7.4 Thermal Information

THERMAL METRIC[1]		ADS7138 RTE (WQFN) 16 PINS	UNIT
$R_{\theta JA}$	Junction-to-ambient thermal resistance	49.7	°C/W
$R_{\theta JC(top)}$	Junction-to-case (top) thermal resistance	53.4	°C/W
$R_{\theta JB}$	Junction-to-board thermal resistance	24.7	°C/W
Ψ_{JT}	Junction-to-top characterization parameter	1.3	°C/W
Ψ_{JB}	Junction-to-board characterization parameter	24.7	°C/W
$R_{\theta JC(bot)}$	Junction-to-case (bottom) thermal resistance	9.3	°C/W

(1) For more information about traditional and new thermal metrics, see the Semiconductor and IC Package Thermal Metrics application report.

7.5 Electrical Characteristics

at AVDD = 2.35 V to 5 V, DVDD = 1.65 V to 5.5 V, and maximum throughput (unless otherwise noted); minimum and maximum values at T_A = –40°C to +125°C; typical values at T_A = 25°C.

PARAMETER		TEST CONDITIONS	MIN	TYP	MAX	UNIT
ANALOG INPUTS						
C_{SH}	Sampling capacitance			12		pF
DC PERFORMANCE						
	Resolution	No missing codes		12		bits
DNL	Differential nonlinearity		–0.75	±0.45	0.75	LSB
INL	Integral nonlinearity		–1.5	±0.5	1.5	LSB
$V_{(OS)}$	Input offset error	Post offset calibration	–2	±0.3	2	LSB
	Input offset thermal drift	Post offset calibration		±1		ppm/°C
G_E	Gain error		–0.065	±0.05	0.65	%FSR
	Gain error thermal drift			±1		ppm/°C
AC PERFORMANCE						
SINAD	Signal-to-noise + distortion ratio	AVDD = 5 V, f_{IN} = 2 kHz	70	72.8		dB
		AVDD = 3 V, f_{IN} = 2 kHz	69.8	72.4		
SNR	Signal-to-noise ratio	AVDD = 5 V, f_{IN} = 2 kHz	71.2	73		dB
		AVDD = 3 V, f_{IN} = 2 kHz	70.5	72.5		
THD	Total harmonic distortion	f_{IN} = 2 kHz		–85		dB
SFDR	Spurious-free dynamic range	f_{IN} = 2 kHz		91		dB
	Crosstalk	100-kHz signal applied on any OFF channel and measured on ON the channel		–100		dB
DECAP Pin						
C_{DECAP}	Decoupling capacitor on DECAP pin		0.1	1	4.7	µF
	Voltage output on DECAP pin	C_{DECAP} = 1 µF		1.8		V
DIGITAL INPUT/OUTPUT (SCL, SDA)						
V_{IH}	Input high logic level	All I^2C modes	0.7 x DVDD		DVDD	V
V_{IL}	Input low logic level	All I^2C modes	–0.3		0.3 x DVDD	V
V_{OL}	Output low logic level	Sink current = 2 mA, DVDD > 2 V	0		0.4	V
		Sink current = 2 mA, DVDD ≤ 2 V	0		0.2 x DVDD	
I_{OL}	Low-level output current (sink)	V_{OL} = 0.4 V, standard and fast Mode			3	mA
		V_{OL} = 0.6 V, fast mode			6	
		V_{OL} = 0.4 V, fast mode plus			20	
GPIOs						
V_{IH}	Input high logic level		0.7 x AVDD		AVDD + 0.3	V
V_{IL}	Input low logic level		–0.3		0.3 x AVDD	V
	Input leakge current	GPIO configured as input		10	100	nA
V_{OH}	Output high logic level	GPO_DRIVE_CFG = push-pull, I_{SOURCE} = 2 mA	0.8 x AVDD		AVDD	V
V_{OL}	Output low logic level	I_{SINK} = 2 mA	0		0.2 x AVDD	V
I_{OH}	Output high source current	V_{OH} > 0.7 x AVDD			5	mA
I_{OL}	Output low sink current	V_{OL} < 0.3 x AVDD			5	mA
DIGITAL OUTPUT (ALERT)						
V_{OH}	Output high logic level	GPO_DRIVE_CFG = push-pull, I_{SOURCE} = 2 mA	0.8 x DVDD		DVDD	V
V_{OL}	Output low logic level	I_{SINK} = 2 mA	0		0.2 x DVDD	V
I_{OH}	Output high sink current	V_{OH} > 0.7 x DVDD			5	mA

Copyright © 2019–2020, Texas Instruments Incorporated

Electrical Characteristics (continued)

at AVDD = 2.35 V to 5 V, DVDD = 1.65 V to 5.5 V, and maximum throughput (unless otherwise noted); minimum and maximum values at T_A = –40°C to +125°C; typical values at T_A = 25°C.

PARAMETER		TEST CONDITIONS	MIN	TYP	MAX	UNIT
I_{OL}	Output low sink current	V_{OL} < 0.3 x DVDD			5	mA
POWER SUPPLY CURRENTS						
I_{AVDD}	Analog supply current	I^2C high-speed mode, AVDD = 5 V		150	210	µA
		I^2C fast mode plus, AVDD = 5 V		45	85	
		I^2C fast mode, AVDD = 5 V		28	46	
		I^2C standard mode, AVDD = 5 V		12	26	
		No conversion, AVDD = 5 V		7	20	

7.6 I^2C Timing Requirements

		MODE(1)				UNIT
		STANDARD, FAST, AND FAST MODE PLUS		HIGH-SPEED MODE		
		MIN	MAX	MIN	MAX	
f_{SCL}	SCL clock frequency(2)		1		3.4	MHz
t_{SUSTA}	START condition setup time for repeated start	260		160		ns
t_{HDSTA}	Start condition hold time	260		160		ns
t_{LOW}	Clock low period	500		160		ns
t_{HIGH}	Clock high period	260		60		ns
t_{SUDAT}	Data in setup time	50		10		ns
t_{HDDAT}	Data in hold time	0		0		ns
t_R	SCL rise time		120		80	ns
t_F	SCL fall time		120		80	ns
t_{SUSTO}	STOP condition hold time	260		60		ns
t_{BUF}	Bus free time before new transmission	500		300		ns

(1) The device supports standard, full-speed, and fast modes by default on power-up. For selecting high-speed mode refer to the section on *Configuring the Device for High-Speed I^2C Mode*.
(2) Bus load (C_B) consideration; C_B ≤ 400 pF for f_{SCL} ≤ 1 MHz; C_B < 100 pF for f_{SCL} = 3.4 MHz.

7.7 Timing Requirements

at AVDD = 2.35 V to 5 V, DVDD = 1.65 V to 5.5 V, and maximum throughput (unless otherwise noted); minimum and maximum values at T_A = –40°C to +125°C; typical values at T_A = 25°C.

		MIN	MAX	UNIT
t_{ACQ}	Acquisition time	300		ns

7.8 I^2C Switching Characteristics

		MODE				UNIT
		STANDARD, FAST, AND FAST MODE PLUS		HIGH-SPEED MODE		
		MIN	MAX	MIN	MAX	
t_{VDDATA}	SCL low to SDA data out valid		450		200	ns
t_{VDACK}	SCL low to SDA acknowledge time		450		200	ns
$t_{STRETCH}$	Clock stretch time in one-shot conversion mode		1400		1000	ns
t_{SP}	Noise supression time constant on SDA and SCL		50		10	ns

Copyright © 2019–2020, Texas Instruments Incorporated

7.9 Switching Characteristics

at AVDD = 2.35 V to 5 V, DVDD = 1.65 V to 5.5 V, and maximum throughput (unless otherwise noted); minimum and maximum values at T_A = –40°C to +125°C; typical values at T_A = 25°C.

PARAMETER		TEST CONDITIONS	MIN	MAX	UNIT
CONVERSION CYCLE					
t_{CONV}	ADC conversion time	Manual and auto sequence modes		$t_{STRETCH}$	ns
		Autonomous mode		600	ns
RESET AND ALERT					
t_{PU}	Power-up time for device	AVDD ≥ 2.35 V		5	ms
t_{RST}	Delay time; RST bit = 1b to device reset complete (1)			5	ms
t_{ALERT_HI}	ALERT high period	ALERT_LOGIC[1:0] = 1x	50	150	ns
t_{ALERT_LO}	ALERT low period	ALERT_LOGIC[1:0] = 1x	50	150	ns

(1) RST bit is automatically reset to 0b after t_{RST}.

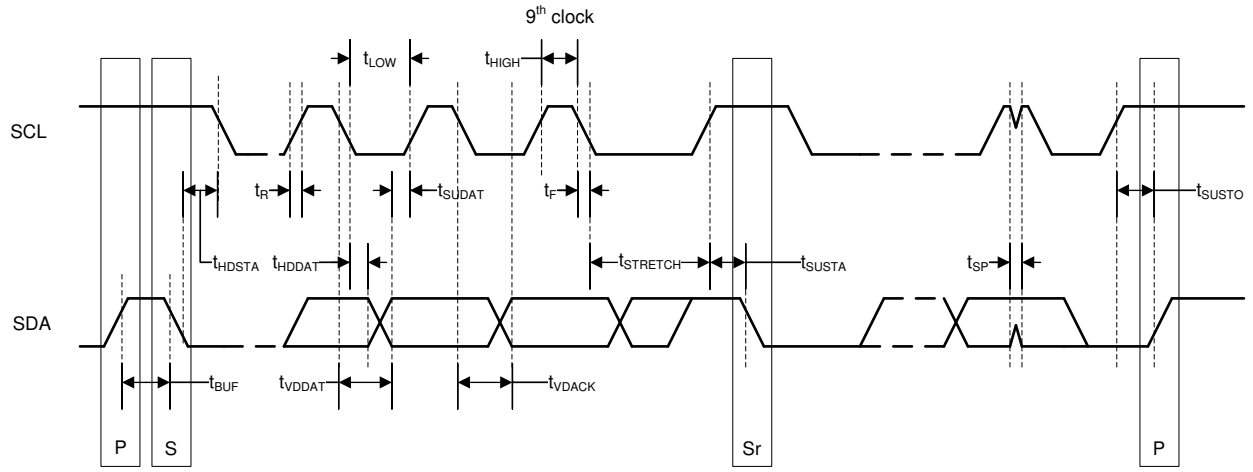

NOTE: S = start, Sr = repeated start, and P = stop.

Figure 1. I²C Timing Diagram

Copyright © 2019–2020, Texas Instruments Incorporated

7.10 Typical Characteristics

at T_A = 25°C, AVDD = 5 V, DVDD = 3.3 V, and maximum throughput (unless otherwise noted)

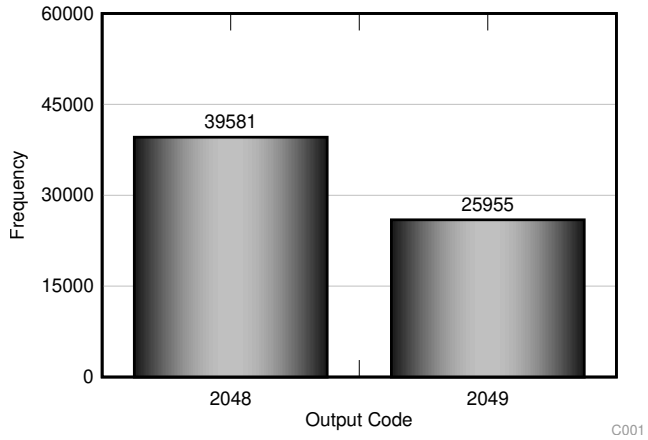

Standard deviation = 0.49 LSB

Figure 2. DC Input Histogram

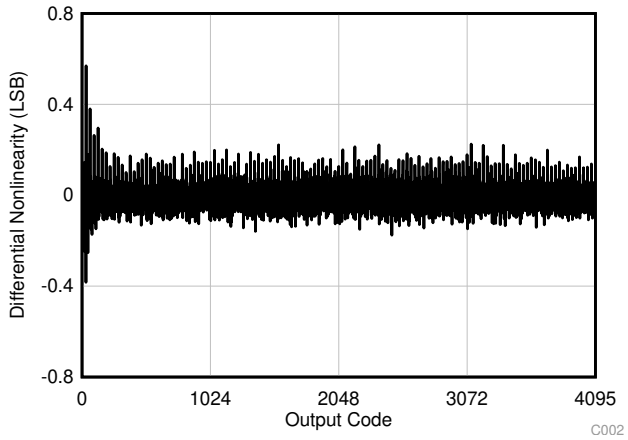

Typical DNL = ±0.2 LSB

Figure 3. Typical DNL

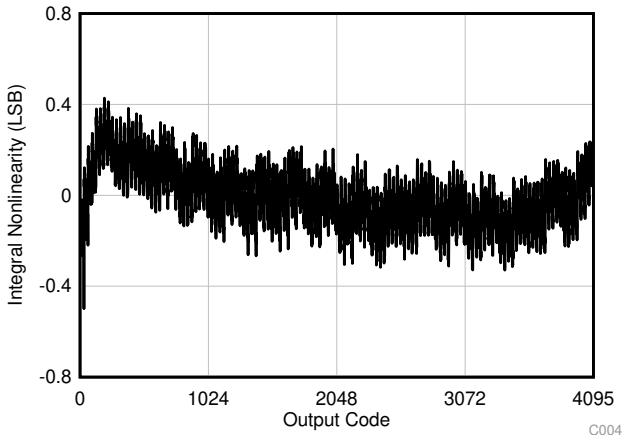

Typical INL = ±0.5 LSB

Figure 4. Typical INL

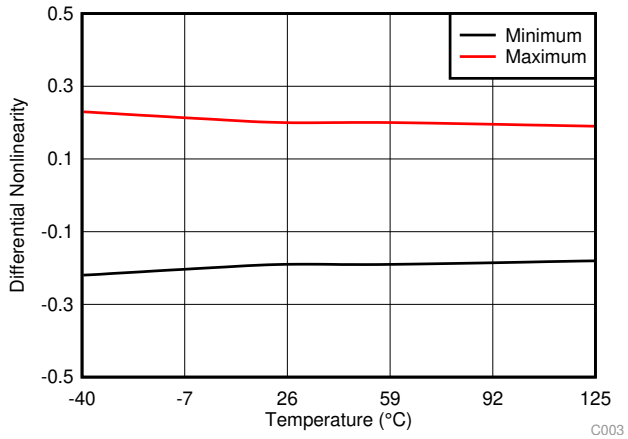

Figure 5. DNL vs Temperature

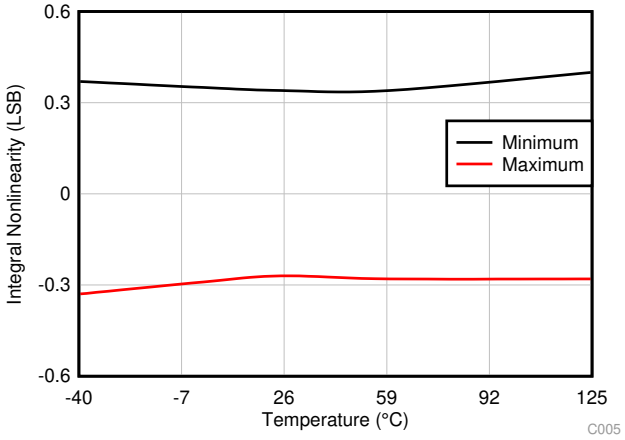

Figure 6. INL vs Temperature

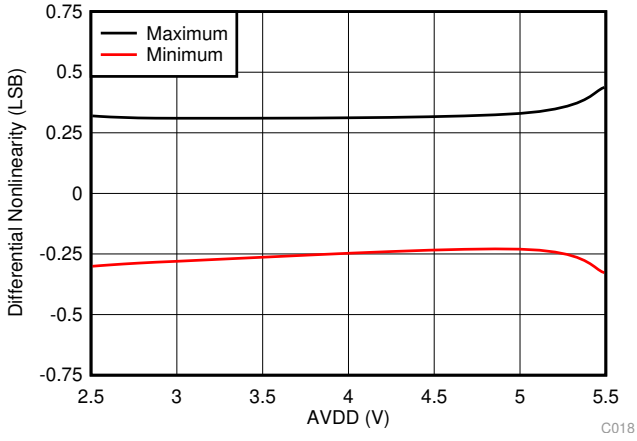

Figure 7. DNL vs AVDD

Typical Characteristics (continued)

at T_A = 25°C, AVDD = 5 V, DVDD = 3.3 V, and maximum throughput (unless otherwise noted)

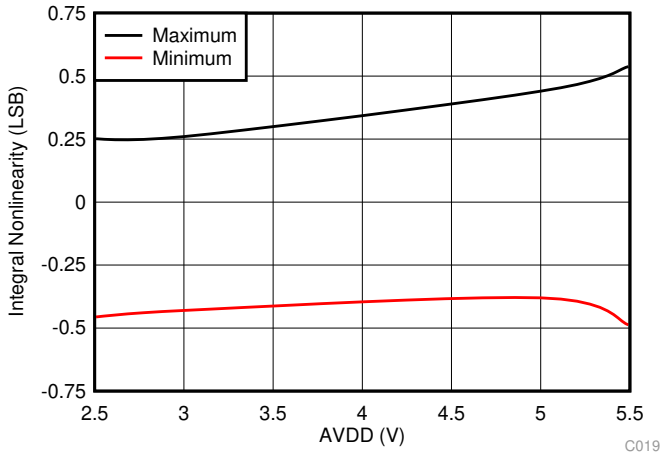

Figure 8. INL vs AVDD

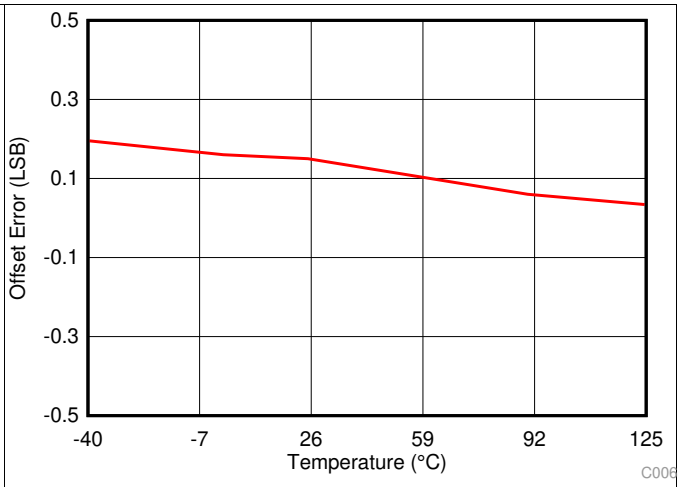

Figure 9. Offset Error vs Temperature

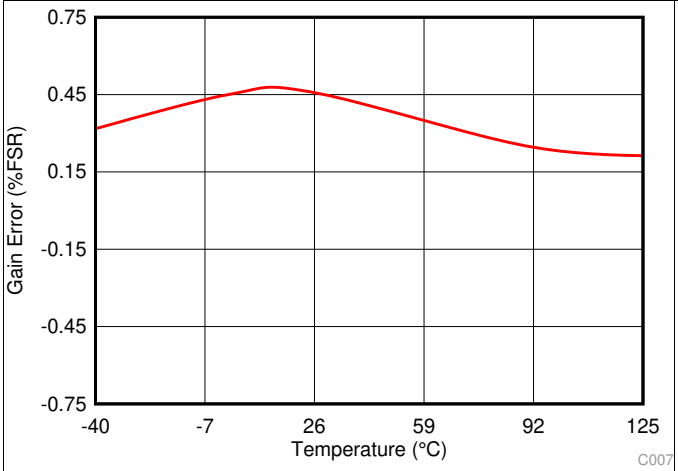

Figure 10. Gain Error vs Temperature

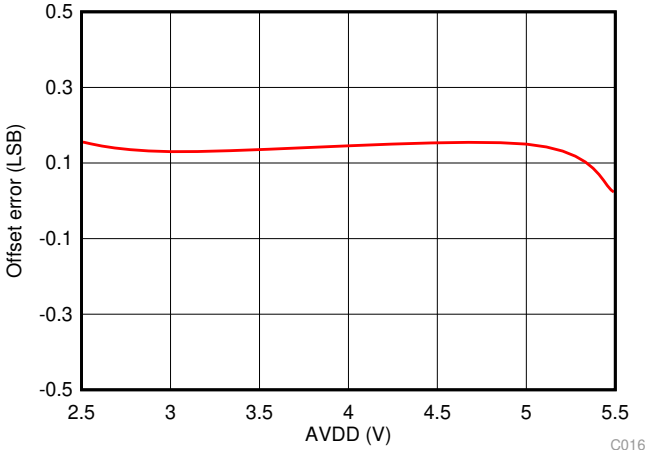

Figure 11. Offset Error vs AVDD

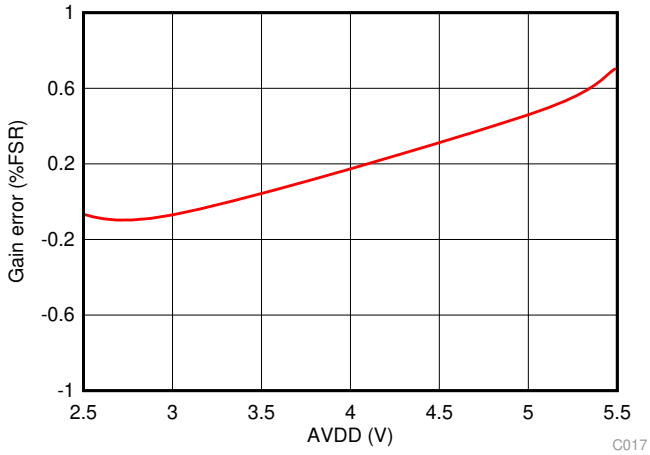

Figure 12. Gain Error vs AVDD

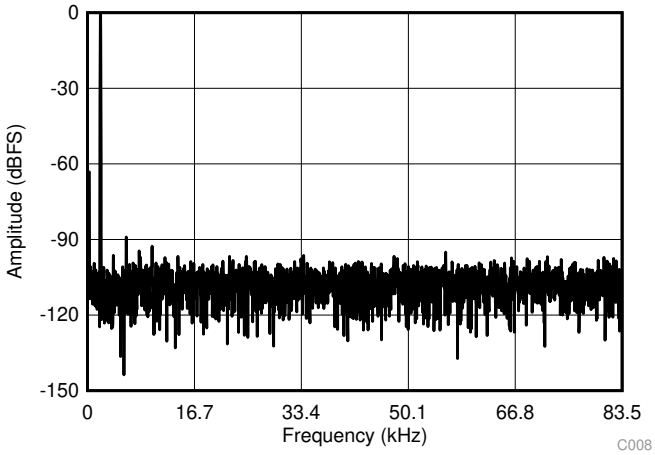

f_{IN} = 2 kHz, SNR = 73.2 dB, THD = 92.3 dB

Figure 13. Typical FFT

Copyright © 2019–2020, Texas Instruments Incorporated

Typical Characteristics (continued)

at T_A = 25°C, AVDD = 5 V, DVDD = 3.3 V, and maximum throughput (unless otherwise noted)

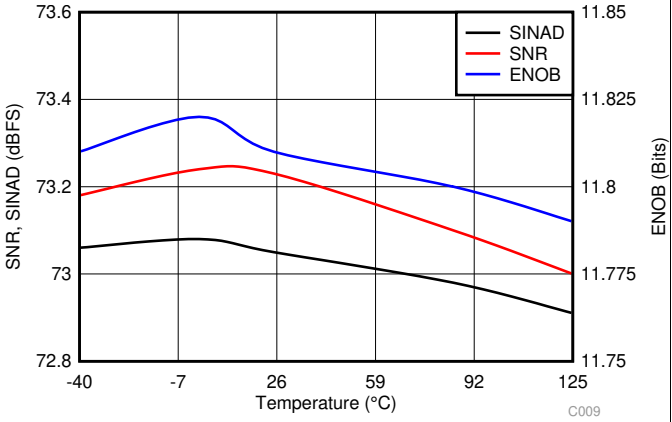

Figure 14. Noise Performance vs Temperature

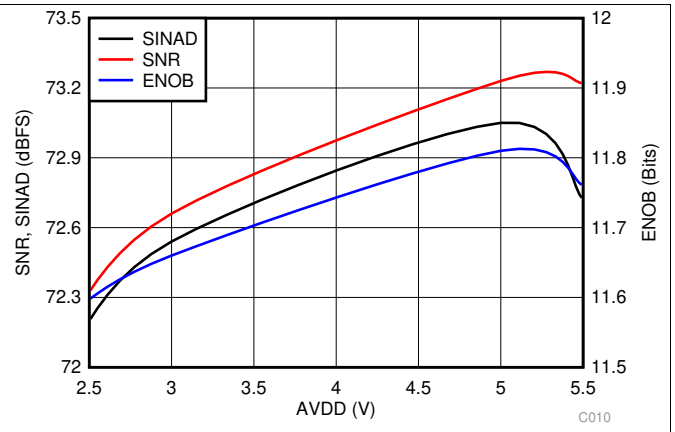

Figure 15. Noise Performance vs AVDD

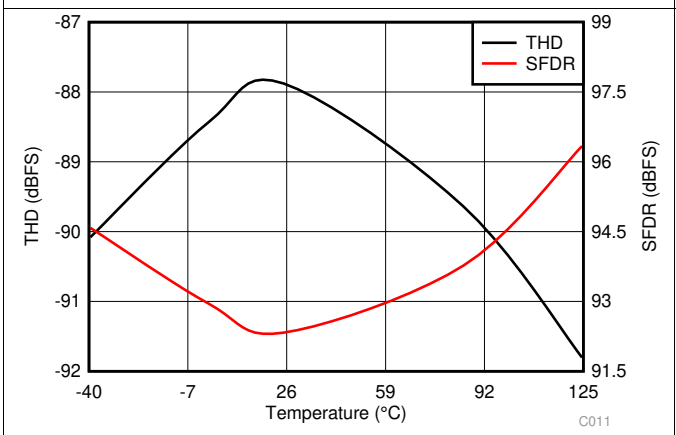

Figure 16. Distortion Performance vs Temperature

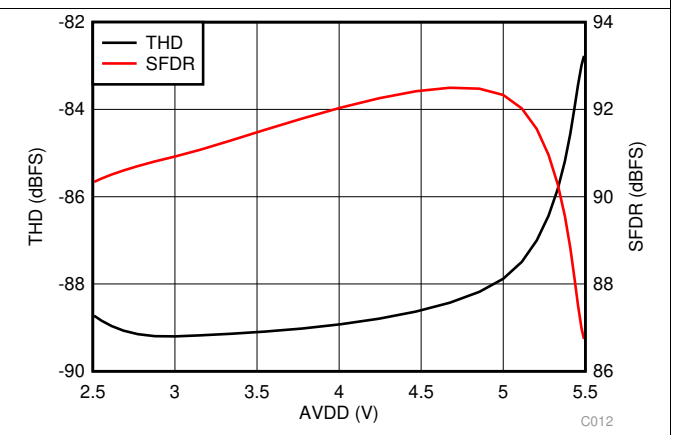

Figure 17. Distortion Performance vs AVDD

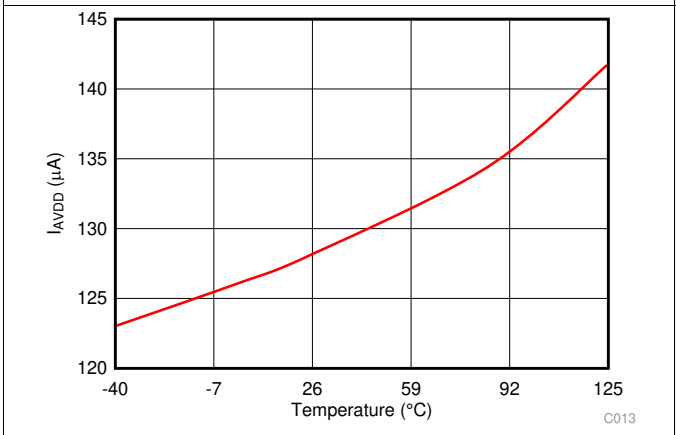

Figure 18. Analog Supply Current vs Temperature

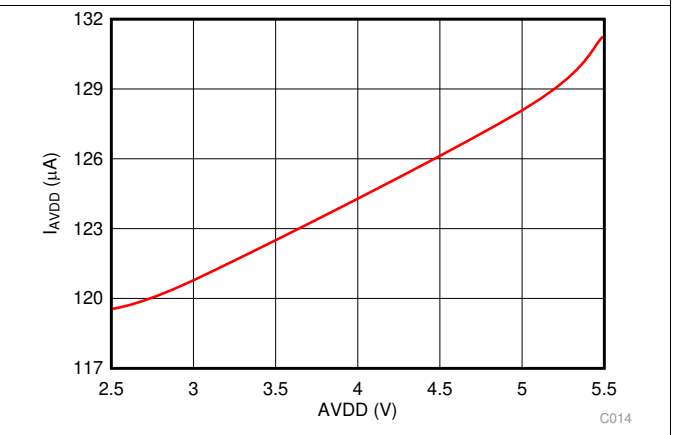

Figure 19. Analog Supply Current vs AVDD

Typical Characteristics (continued)

at T_A = 25°C, AVDD = 5 V, DVDD = 3.3 V, and maximum throughput (unless otherwise noted)

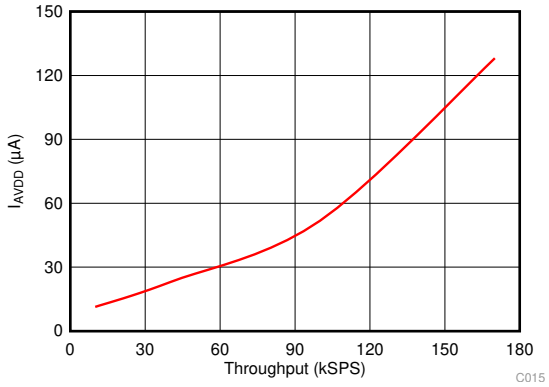

Figure 20. Analog Supply Current vs Throughput

Copyright © 2019–2020, Texas Instruments Incorporated

8 Detailed Description

8.1 Overview

The ADS7138 is a small, eight-channel, multiplexed, 12-bit, analog-to-digital converter (ADC) with an I^2C-compatible serial interface. The eight channels of the ADS7138 can be individually configured as either analog inputs, digital inputs, or digital outputs. The device includes a digital comparator with a dedicated alert pin that can be used to interrupt the host when a programmed high or low threshold is crossed on any input channel. The device uses an internal oscillator for conversion. The ADC can be used in the manual mode for reading ADC data over the I^2C interface or in autonomous mode for monitoring the analog inputs without an active I^2C interface.

The device features a programmable averaging filter that outputs a 16-bit result for enhanced resolution.

The I^2C serial interface supports standard-mode, fast-mode, fast-mode plus, and high-speed mode. The device also features an 8-bit cyclic redundancy check (CRC) for the serial communication interface.

8.2 Functional Block Diagram

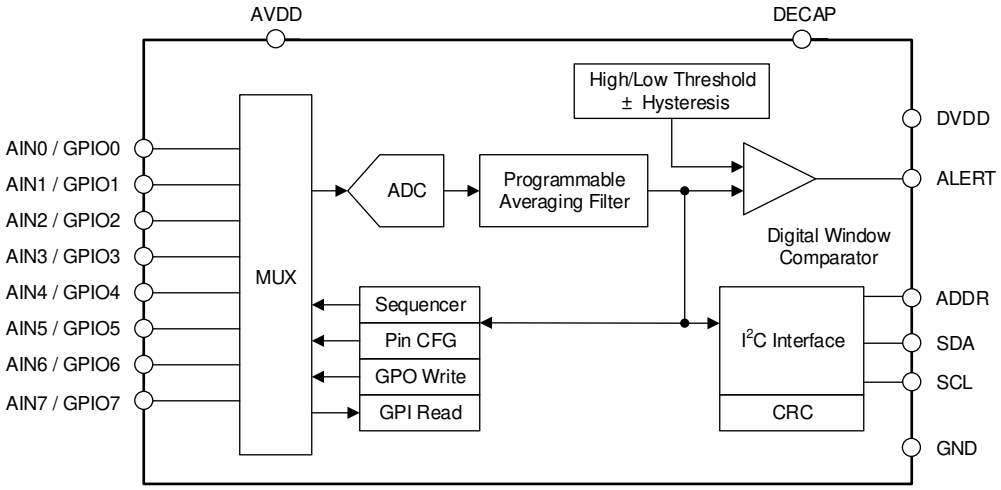

8.3 Feature Description

8.3.1 Multiplexer and ADC

The eight channels of the multiplexer can be independently configured as ADC inputs or general-purpose inputs/outputs (GPIOs). Figure 21 shows that each input pin has electrostatic discharge (ESD) protection diodes to AVDD and GND. On power-up or after device reset, all eight multiplexer channels are configured as analog inputs.

Figure 21 shows an equivalent circuit for pins configured as analog inputs. The ADC sampling switch is represented by an ideal switch (SW) in series with the resistor, R_{SW} (typically 150 Ω), and the sampling capacitor, C_{SH} (typically 12 pF).

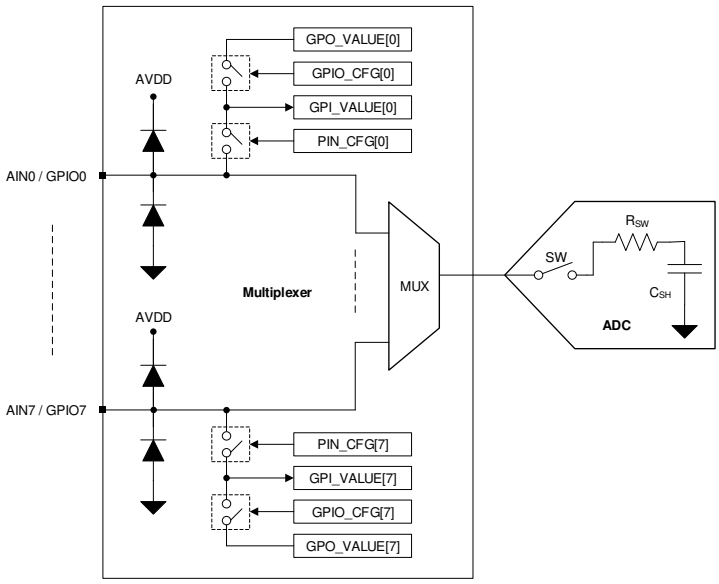

Figure 21. Analog Inputs, GPIOs, and ADC Connections

During acquisition, the SW switch is closed to allow the signal on the selected analog input channel to charge the internal sampling capacitor. During conversion, the SW switch is opened to disconnect the analog input channel from the sampling capacitor.

The multiplexer channels can be configured as GPIOs in the PIN_CFG register. The direction of a GPIO (either as an input or an output) can be set in the GPIO_CFG register. The logic level on the channels configured as digital I/O can be read from the GPI_VALUE register. The digital outputs can be accessed by writing to the GPO_VALUE register. The digital outputs can be configured as either open-drain or push-pull in the GPO_DRIVE_CFG register.

8.3.2 Reference

The device uses the analog supply voltage (AVDD) as a reference for the analog-to-digital conversion process. TI recommends connecting a 1-µF, low-equivalent series resistance (ESR) ceramic decoupling capacitor between the AVDD and GND pins.

8.3.3 ADC Transfer Function

The ADC output is in straight binary format. Equation 1 computes the ADC resolution:

$$1\ \text{LSB} = V_{REF} / 2^N \tag{1}$$

where:

- V_{REF} = AVDD
- N = 12

Figure 22 and Table 1 detail the transfer characteristics for the device.

Copyright © 2019–2020, Texas Instruments Incorporated

Feature Description (continued)

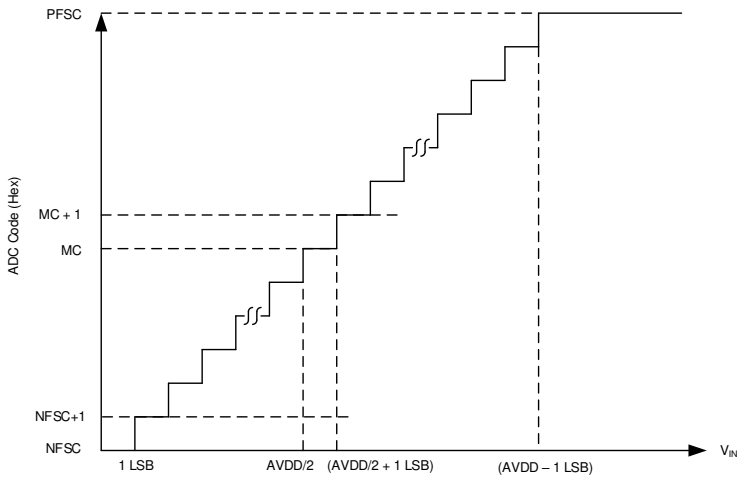

Figure 22. Ideal Transfer Characteristics

Table 1. Transfer Characteristics

INPUT VOLTAGE	CODE	DESCRIPTION	IDEAL OUTPUT CODE
≤1 LSB	NFSC	Negative full-scale code	000
1 LSB to 2 LSBs	NFSC + 1	—	001
(AVDD / 2) to (AVDD / 2) + 1 LSB	MC	Mid code	800
(AVDD / 2) + 1 LSB to (AVDD / 2) + 2 LSB	MC + 1	—	801
≥ AVDD – 1 LSB	PFSC	Positive full-scale code	FFF

8.3.4 ADC Offset Calibration

The variation in ADC offset error resulting from changes in temperature or AVDD can be calibrated by setting the CAL bit in the GENERAL_CFG register. The CAL bit is reset to 0 after calibration. The host can poll the CAL bit to check the ADC offset calibration completion status.

8.3.5 I²C Address Selector

The I²C address for the device is determined by connecting external resistors on the ADDR pin. The device address is determined at power-up based on the resistor values. The device retains this address until the next power-up event, until the next device reset, or until the device receives a command to program its own address. Figure 23 shows a connection diagram for the ADDR pin and Table 2 lists the resistor values for selecting different addresses of the device.

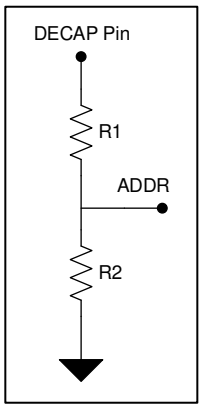

Figure 23. External Resistor Connection Diagram for the ADDR Pin

Table 2. I²C Address Selection

RESISTORS		ADDRESS
R1 (1)	R2 (1)	
0 Ω	DNP (2)	001 0111b (17h)
11 kΩ	DNP (2)	001 0110b (16h)
33 kΩ	DNP (2)	001 0101b (15h)
100 kΩ	DNP (2)	001 0100b (14h)
DNP (2)	DNP (2)	001 0000b (10h)
DNP (2)	11 kΩ	001 0001b (11h)
DNP (2)	33 kΩ	001 0010b (12h)
DNP (2)	100 kΩ	001 0011b (13h)

(1) Tolerance for R1, R2 ≤ ±5%.
(2) DNP = Do not populate.

8.3.6 Programmable Averaging Filter

The ADS7138 features a built-in oversampling (OSR) function that can be used to average several samples. The averaging filter can be enabled by programming the OSR[2:0] bits in the OSR_CFG register. The averaging filter configuration is common to all analog input channels. Figure 24 shows that the averaging filter module output is 16 bits long. In the manual conversion mode and auto-sequence mode, only the first conversion for the selected analog input channel must be initiated by the host; see the *Manual Mode* and *Auto-Sequence Mode* sections. As shown in Figure 24, any remaining conversions for the selected averaging factor are generated internally. The time required to complete the averaging operation is determined by the sampling speed and number of samples to be averaged. As shown in Figure 24, the 16-bit result can be read out after the averaging operation completes.

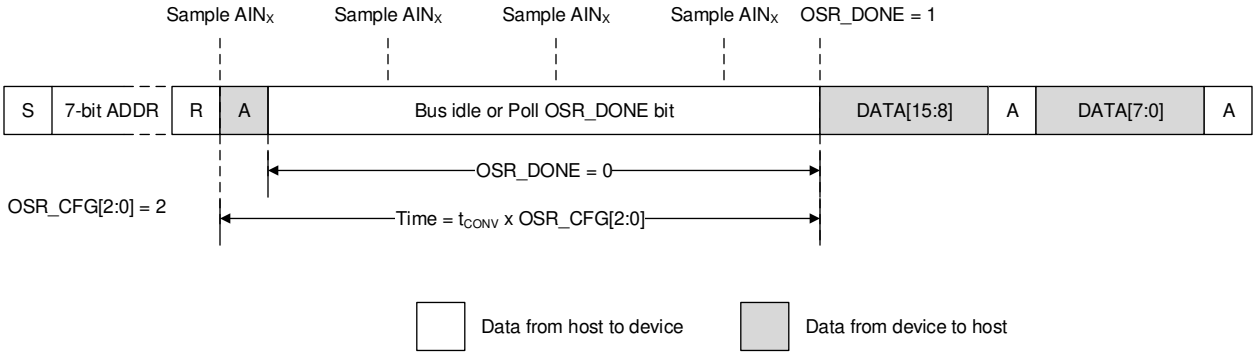

Figure 24. Averaging Example

In Figure 24, SCL is stretched by the device after the start of conversions until the averaging operation is complete.

If SCL stretching is not required during averaging, enable the statistics registers by setting STATS_EN to 1b and initiate conversions by writing 1b to the CNVST bit. The OSR_DONE bit in the SYSTEM_STATUS register can be polled to check the averaging completion status. When using the CNVST bit to initiate conversion, the result can be read in the RECENT_CHx_LSB and RECENT_CHx_MSB registers.

In the autonomous mode of operation, samples from the analog input channels that are enabled in the AUTO_SEQ_CH_SEL register are averaged sequentially; see the *Autonomous Mode* section. The digital window comparator compares the top 12 bits of the 16-bit average result with the thresholds.

Equation 2 provides the LSB value of the 16-bit average result.

$$1\ LSB = \frac{AVDD}{2^{16}} \tag{2}$$

Copyright © 2019–2020, Texas Instruments Incorporated

8.3.7 CRC on Data Interface

The ADS7138 features a cyclic redundancy check (CRC) module for checking the integrity of the data bits exchanged over the I^2C interface. The CRC module is bidirectional and appends an 8-bit CRC to every byte read from the device while also evaluating the CRC of every incoming byte over the I^2C interface. The CRC module uses the CRC-8-CCITT polynomial ($x^8 + x^2 + x + 1$) for CRC computation.

To enable the CRC module, set the CRC_EN bit in the GENERAL_CFG register. Table 3 shows how a CRC error can be detected when configuring the ADS7138.

Table 3. Configuration Notifications When a CRC Error is Detected

CRC ERROR NOTIFICATION	CONFIGURATION	DESCRIPTION
ALERT pin	ALERT_CRCIN = 1b	ALERT pin is asserted if a CRC error is detected by the device.
Status flags	APPEND_STATUS = 10b	4-bit status flags are appended to the ADC data; see the *Output Data Format* section for details.
Register read	—	Read the CRC_ERR_IN bit to check if a CRC error is detected.

When the ADS7138 detects a CRC error, the erroneous data are ignored and the CRC_ERR_IN bit is set. Table 3 describes the additional notifications that can be enabled. Further register writes are disabled until the CRC_ERR_IN bit is cleared by writing 1b to it. When using autonomous mode, further conversions can be disabled on the CRC error by setting CONV_ON_ERR to 1b; see the *Autonomous Mode* section.

8.3.8 General-Purpose I/Os (GPIOs)

The eight channels of the ADS7138 can be independently configured as analog inputs, digital inputs, or digital outputs. Table 4 describes how the PIN_CFG and GPIO_CFG registers can be used to configure the channels.

Table 4. Configuring Channels as Analog Inputs or GPIOs

PIN_CFG[7:0]	GPIO_CFG[7:0]	GPO_DRIVE_CFG[7:0]	CHANNEL CONFIGURATION
0	x	x	Analog input (default)
1	0	x	Digital input
1	1	0	Digital output; open-drain driver
1	1	1	Digital output; push-pull driver

The digital outputs can be configured to logic 1 or 0 by writing to the GPO_VALUE register. Reading the GPI_VALUE register returns the logic level for all channels configured as digital inputs.

8.3.9 Oscillator and Timing Control

The device uses an internal oscillator for conversions. When using the averaging module, the host initiates the first conversion and all subsequent conversions are generated internally by the device. Table 5 shows that when the device generates the start of the conversion, the sampling rate is controlled by the OSC_SEL and CLK_DIV[3:0] register fields.

Table 5. Configuring Sampling Rate for Internal Conversion Start Control

CLK_DIV[3:0]	OSC_SEL = 0		OSC_SEL = 1	
	SAMPLING FREQUENCY, f_{CYCLE} (kSPS)	CYCLE TIME, t_{CYCLE} (µs)	SAMPLING FREQUENCY, f_{CYCLE} (kSPS)	CYCLE TIME, t_{CYCLE} (µs)
0000b	1000	1	31.25	32
0001b	666.7	1.5	20.83	48
0010b	500	2	15.63	64
0011b	333.3	3	10.42	96
0100b	250	4	7.81	128
0101b	166.7	6	5.21	192
0110b	125	8	3.91	256
0111b	83	12	2.60	384
1000b	62.5	16	1.95	512
1001b	41.7	24	1.3	768
1010b	31.3	32	0.98	1024
1011b	20.8	48	0.65	1536
1100b	15.6	64	0.49	2048
1101b	10.4	96	0.33	3072
1110b	7.8	128	0.24	4096
1111b	5.2	192	0.16	6144

The conversion time of the device (see t_{CONV} in the *Switching Characteristics* table) is independent of the OSC_SEL and CLK_DIV[3:0] configuration.

8.3.10 Output Data Format

Figure 25 illustrates various I^2C frames for reading data.

- Read the ADC conversion result: Two 8-bit I^2C packets are required (frame A).
- Read the averaged conversion result: Two 8-bit I^2C packets are required (frame B).
- Read data with the channel ID or status flags appended: The 4-bit channel ID or status flags can be appended to the 12-bit ADC result by configuring the APPEND_STATUS field in the GENERAL_CFG register. The status flags can be used to detect if a CRC error is detected and if an alert condition is detected by the digital window comparator. When the channel ID or status flags are appended to the 12-bit ADC data, two I^2C packets are required (frame C). If the channel ID or status flags are appended to the 16-bit average result, three I^2C frames are required (frame D).

Copyright © 2019–2020, Texas Instruments Incorporated

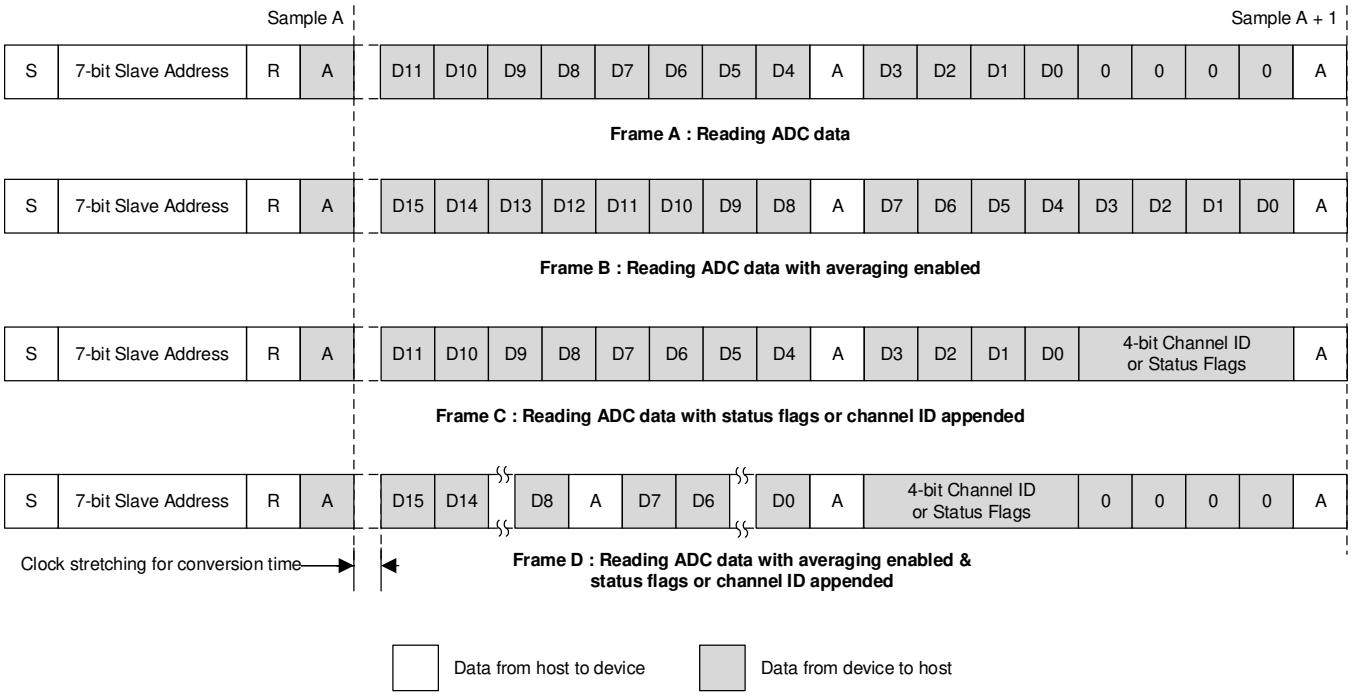

Figure 25. Data Frames for Reading Data

When status flags are enabled, APPEND_STATUS is set to 10b and four bits are appended to the ADC output. The device outputs status flags in this order: {1b, 0b, CRCERR_IN, ALERT}. The level transitions on the digital interface, resulting from the fixed 1b and 0b in the status flags, can be used to detect if the digital outputs are shorted to a fixed voltage in the system. The CRCERR_IN flag reflects the corresponding bit in the GENERAL_CFG register. The ALERT flag is the output of the logical OR of the bits in the EVENT_FLAG register.

8.3.11 Digital Window Comparator

The internal digital window comparator (DWC) is available in all functional modes of the device (see the *Device Functional Modes* section for details). The digital window comparator controls output of the ALERT pin buffer. The ALERT pin can be configured as open-drain (default) or push-pull output using the ALERT_DRIVE bit in the ALERT_PIN_CFG register. Figure 26 shows a block diagram for the digital window comparator.

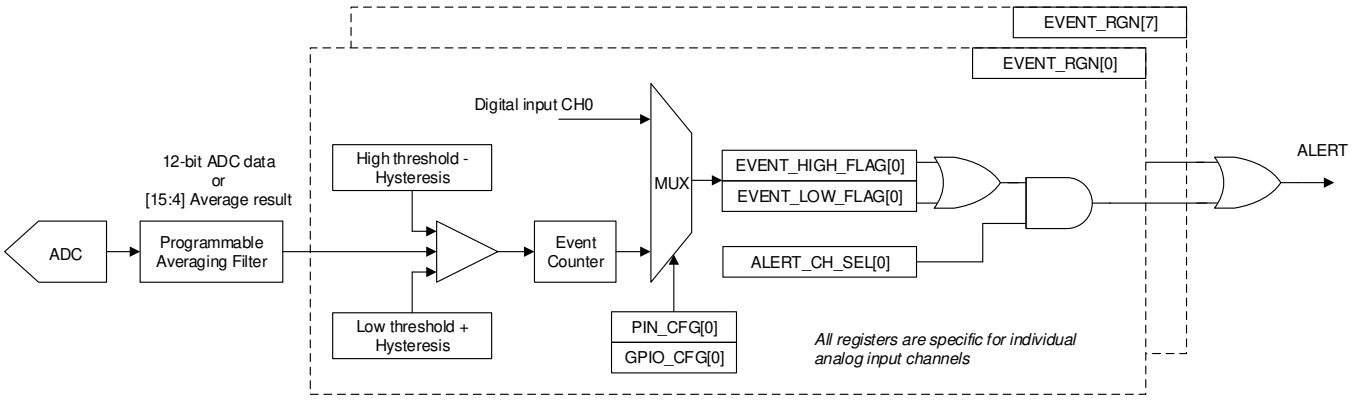

Figure 26. Digital Window Comparator Block Diagram

The low-side threshold, high-side threshold, event counter, and hysteresis parameters are independently programmable for each input channel. Figure 27 shows the events that can be monitored for every analog input channel by the window comparator.

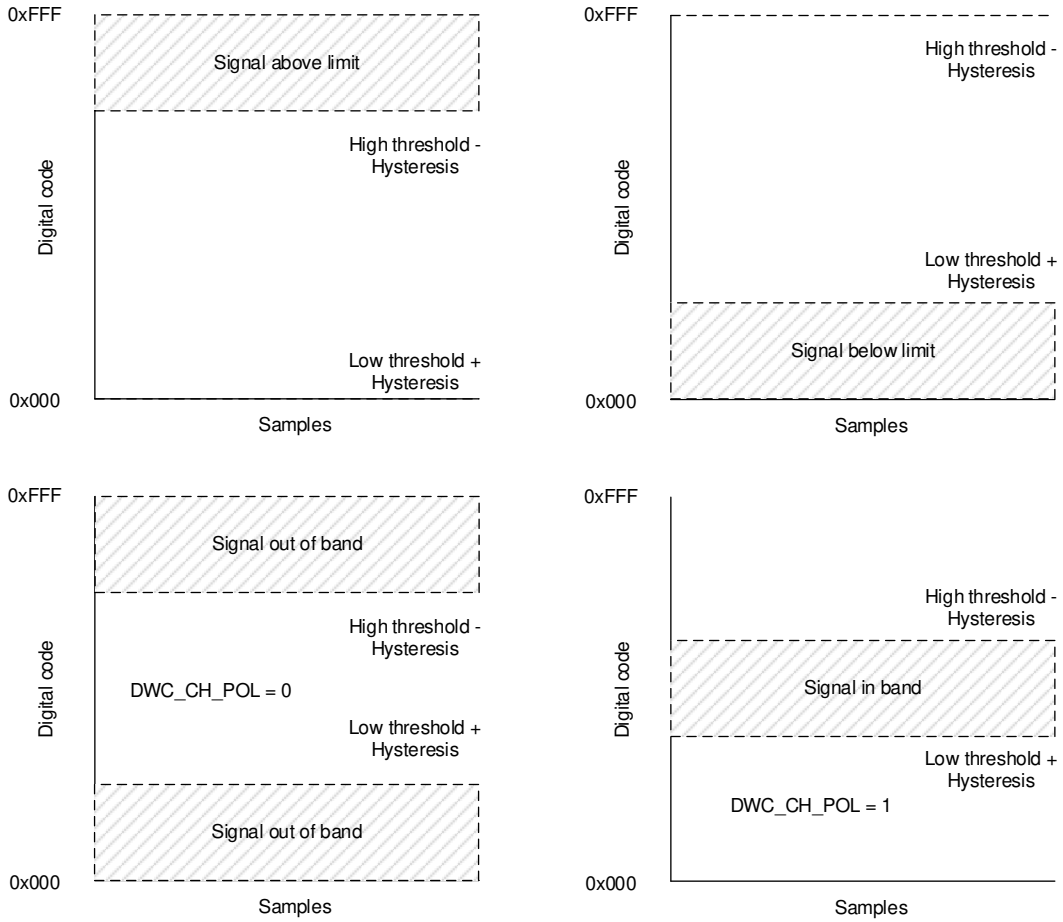

Figure 27. Event Monitoring With the Window Comparator

To enable the digital window comparator, set the DWC_EN bit in the GENERAL_CFG register. By default, hysteresis is 0, the high threshold is 0xFFF, and the low threshold is 0x000. A 12-bit straight binary code cannot be higher than 0xFFF or lower than 0x000, thus the thresholds have no effect unless set to different values. Figure 27 shows the various types of event that can be detected by adjusting the thresholds. For detecting when a signal is in-band, the EVENT_RGN register must be configured. In each of the cases shown in Figure 27, either or both EVENT_HIGH_FLAG and EVENT_LOW_FLAG can be set.

The programmable event counter counts consecutive thresholds violations before alert flags can be set. The event count can be set to a higher value to avoid transients in the input signal setting the alert flags.

In order to assert the ALERT pin when the alert flag is set for a particular analog input channel, set the corresponding bit in the ALERT_CH_SEL register. Alert flags are set regardless of the ALERT_CH_SEL configuration if DWC_EN is 1 and the high or low thresholds are exceeded.

Copyright © 2019–2020, Texas Instruments Incorporated

8.3.11.1 Interrupts From Digital Inputs

Logic 1 or logic 0 events can detected on channels configured as digital inputs, as shown in Table 6, by enabling the corresponding ALERT_CH_SEL bit.

Table 6. Configuring Interrupts From Digital Inputs

PIN_CFG[7:0]	GPIO_CFG[7:0]	ALERT_CH_SEL[7:0]	EVENT_RGN [7:0]	EVENT DESCRIPTION
1	0	1	0	EVENT_HIGH_FLAG is set when digital input channel is at logic 1.
1	0	1	1	EVENT_LOW_FLAG is set when digital input channel is at logic 0.

8.3.11.2 Changing Digital Outputs on Alert

Figure 28 shows how digital outputs can be updated in response to alerts from individual channels.

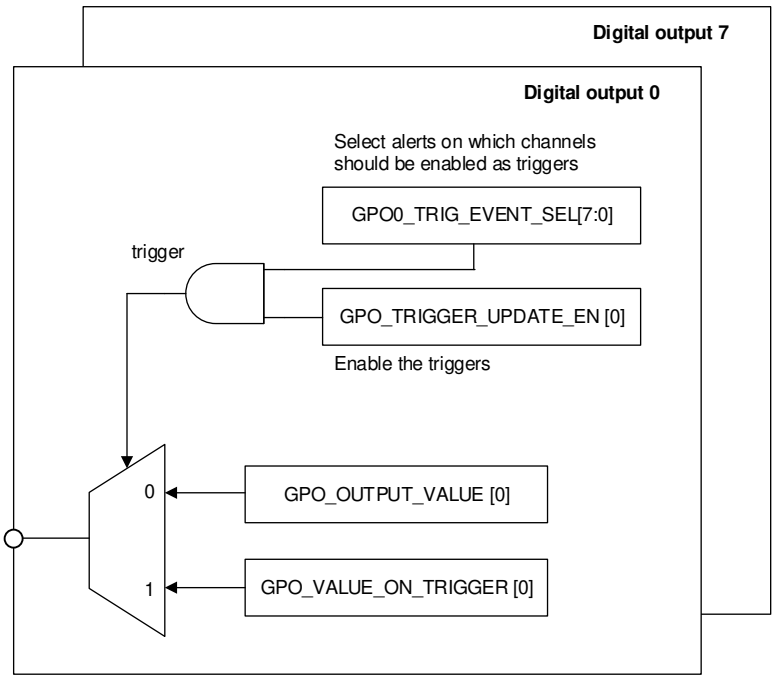

Figure 28. Block Diagram for the Digital Output Logic

8.3.11.2.1 Changing Digital Outputs on Alerts

Any given digital output can be updated in response to an alert condition on one or more analog inputs and digital inputs. To update the digital output in response to alert conditions, the trigger must be configured and the value must be launched on the trigger.

8.3.11.2.1.1 Trigger

The following events can act as triggers for updating the value on the digital output:

- An alert occurs on one or more analog input channels. The digital window comparator must be enabled for these channels.
- An alert occurs on one or more digital input channels. The digital window comparator must be enabled for these channels.

Configure the GPOx_TRIG_EVENT_SEL register to select which channels, analog inputs, or digital inputs can trigger an update on the digital output pin. After configuring the triggers for updating a digital output, the logic can be enabled by configuring the corresponding bit in the GPO_TRIGGER_UPDATE_EN register.

8.3.11.2.1.2 Output Value

The digital outputs can be set to logic 1 or logic 0 in response to the triggers. The value to be updated on the digital output when a trigger event occurs can be configured in the GPO_VALUE_ON_TRIGGER register.

8.3.12 Minimum, Maximum, and Latest Data Registers

The ADS7138 can record the minimum, maximum, and latest code (statistics registers) for every analog input channel. To enable or re-enable recording statistics, set the STATS_EN bit in the GENERAL_CFG register. Writing 1 to the STATS_EN bit reinitializes the statistics module, after which results from new conversions are recorded in the statistics registers. Until a new conversion result is available, previous values can be read from the statistics registers. Before reading the statistics registers, set STATS_EN to 0 to prevent any updates to this register block.

8.3.13 I^2C Protocol Features

8.3.13.1 General Call

On receiving a general call (00h), the device provides an acknowledge (ACK).

8.3.13.2 General Call With Software Reset

On receiving a general call (00h) followed by a software reset (06h), the device resets itself.

8.3.13.3 General Call With a Software Write to the Programmable Part of the Slave Address

On receiving a general call (00h) followed by 04h, the device reevaluates its own I^2C address configured by the ADDR pin. During this operation, the device does not respond to other I^2C commands except the general-call command.

8.3.13.4 Configuring the Device for High-Speed I^2C Mode

The device can be configured in high-speed I^2C mode by providing an I^2C frame with one of these codes: 0x09, 0x0B, 0x0D, or 0x0F.

After receiving one of these codes, the device sets the I2C_HIGH_SPEED bit in the SYSTEM_STATUS register and remains in high-speed I^2C mode until a STOP condition is received in an I^2C frame.

8.4 Device Functional Modes

Table 7 lists the functional modes supported by the ADS7138.

Table 7. Functional Modes

FUNCTIONAL MODE	CONVERSION CONTROL	MUX CONTROL	CONV_MODE[1:0]	SEQ_MODE[1:0]
Manual	9th falling edge of SCL (ACK)	Register write to MANUAL_CHID	00b	00b
Auto-sequence	9th falling edge of SCL (ACK)	Channel sequencer	00b	01b
Autonomous	Internal to the device	Channel sequencer	01b	01b

Copyright © 2019–2020, Texas Instruments Incorporated

The device powers up in manual mode (see the *Manual Mode* section) and can be configured into any mode listed in Table 7 by writing the configuration registers for the desired mode.

8.4.1 Device Power-Up and Reset

On power-up, the device calculates the address from the resistors connected on the ADDR pin and the BOR bit is set, thus indicating a power-cycle or reset event.

The device can be reset by an I^{2}C general call (00h) followed by a software reset (06h), by setting the RST bit, or by recycling the power on the AVDD pin.

8.4.2 Manual Mode

Manual mode allows the external host processor to directly select the analog input channel. Figure 29 lists the steps for operating the device in manual mode.

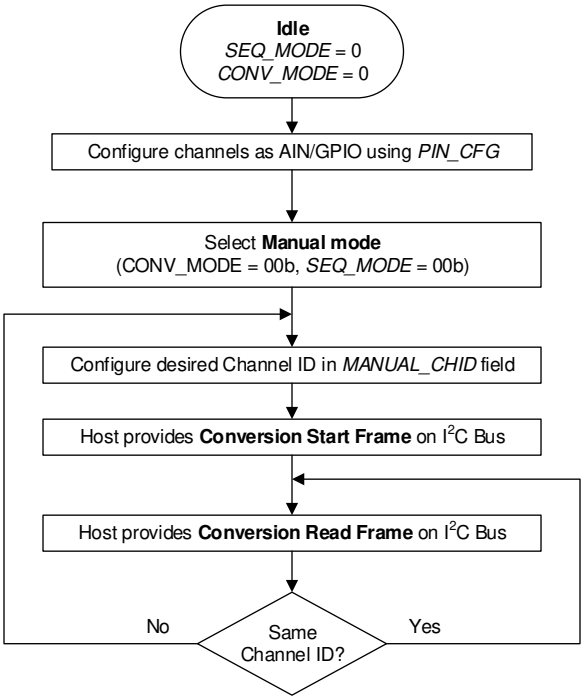

Figure 29. Device Operation in Manual Mode

Provide an I^{2}C start or restart frame to initiate a conversion, as shown in the conversion start frame of Figure 30, after configuring the device registers. ADC data can be read in subsequent I^{2}C frames. The number of I^{2}C frames required to read conversion data depends on the output data frame size; see the *Output Data Format* section for more details. A new conversion is initiated on the ninth falling edge of SCL (ACK bit) when the last byte of output data is read.

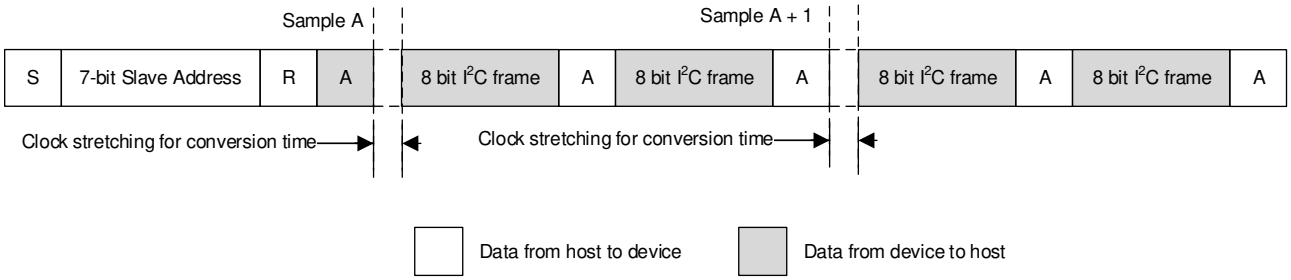

Figure 30. Starting a Conversion and Reading Data in Manual Mode

8.4.3 Auto-Sequence Mode

In auto-sequence mode, the internal channel sequencer switches the multiplexer to the next analog input channel after every conversion. The desired analog input channels can be configured for sequencing in the AUTO_SEQ_CHSEL register. To enable the channel sequencer, set SEQ_START to 1b. After every conversion, the channel sequencer switches the multiplexer to the next analog input in ascending order. To stop the channel sequencer from selecting channels, set SEQ_START to 0b. Figure 31 lists the conversion start and read frames for auto-sequence mode.

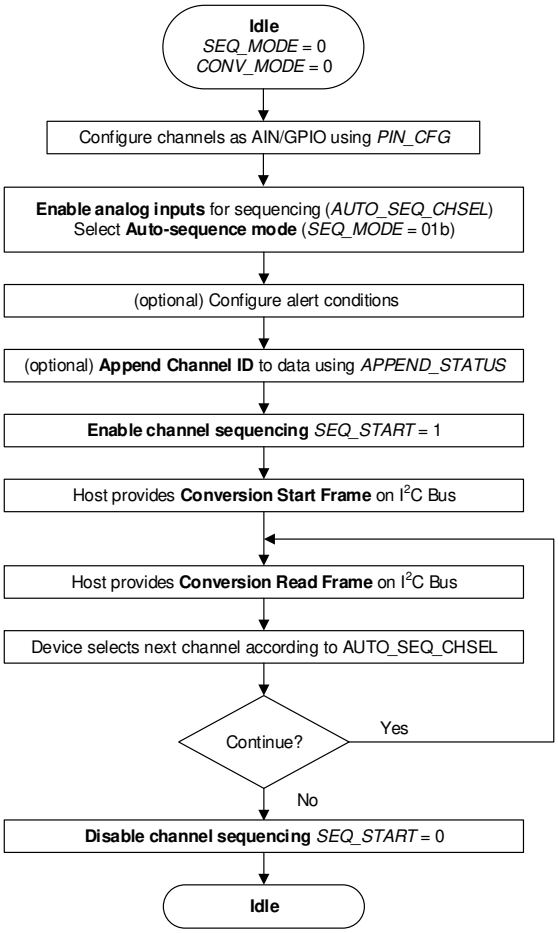

Figure 31. Device Operation in Auto-Sequence Mode

8.4.4 Autonomous Mode

In autonomous mode, the device can be programmed to monitor the voltage applied on the analog input pins of the device and generate a signal on the ALERT pin when the programmable high or low threshold values are crossed. In this mode, the device generates the start of conversion using the internal oscillator. The first start of conversion must be provided by the host and the device then generates the subsequent start of conversions.

Figure 32 shows the steps for configuring the operation mode to autonomous mode. Abort the ongoing sequence by setting SEQ_START to 0b before changing the functional mode or device configuration.

Copyright © 2019–2020, Texas Instruments Incorporated

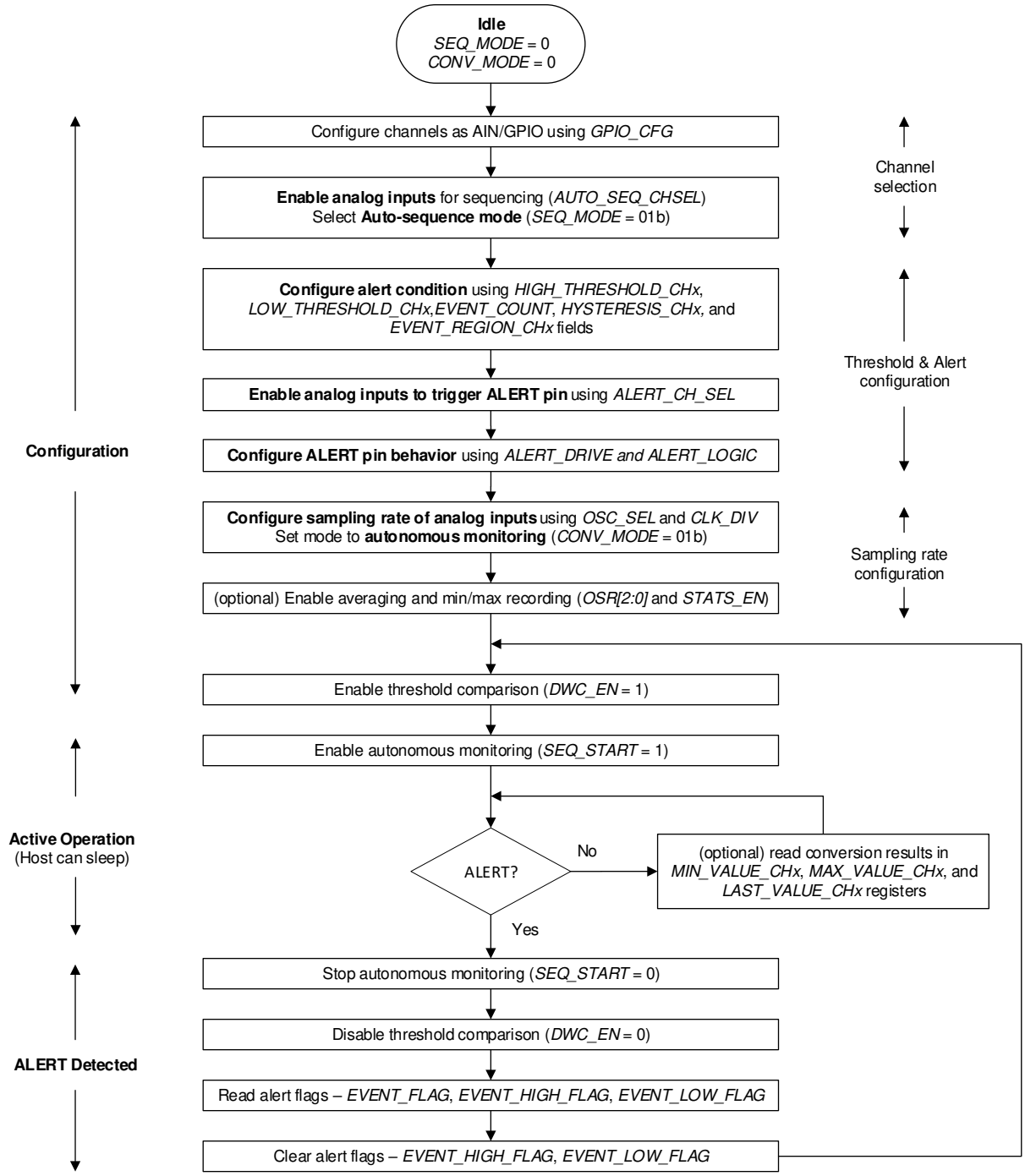

Figure 32. Configuring the Device in Autonomous Mode

8.5 Programming

Table 8 provides the acronyms for different conditions in an I²C frame. Table 9 lists the various command opcodes.

Table 8. I²C Frame Acronyms

SYMBOL	DESCRIPTION
S	Start condition for the I²C frame
Sr	Restart condition for the I²C frame
P	Stop condition for the I²C frame
A	ACK (low)
N	NACK (high)
R	Read bit (high)
W	Write bit (low)

Table 9. Opcodes for Commands

OPCODE	COMMAND DESCRIPTION
0001 0000b	Single register read
0000 1000b	Single register write
0001 1000b	Set bit
0010 0000b	Clear bit
0011 0000b	Reading a continuous block of registers
0010 1000b	Writing a continuous block of registers

8.5.1 Reading Registers

The I²C master can either read a single register or a continuous block registers from the device, as described in the *Single Register Read* and *Reading a Continuous Block of Registers* sections.

8.5.1.1 Single Register Read

To read a single register from the device, the I²C master must provide an I²C command with three frames to set the register address for reading data. Table 9 lists the opcodes for different commands. After this command is provided, the I²C master must provide another I²C frame (as shown in Figure 33) containing the device address and the read bit. After this frame, the device provides the register data. The device provides the same register data even if the host provides more clocks. To end the register read command, the master must provide a STOP or a RESTART condition in the I²C frame.

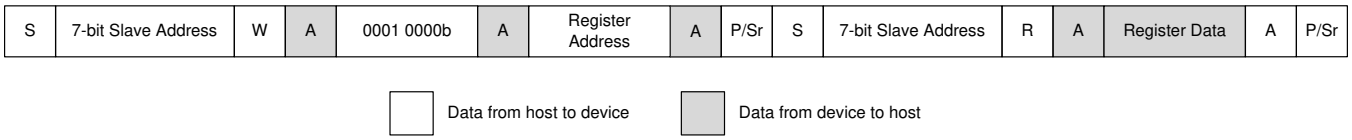

Data from host to device Data from device to host

NOTE: S = start, Sr = repeated start, and P = stop.

Figure 33. Reading Register Data

Copyright © 2019–2020, Texas Instruments Incorporated

8.5.1.2 Reading a Continuous Block of Registers

To read a continuous block of registers, the I²C master must provide an I²C command to set the register address. The register address is the address of the first register in the block that must be read. After this command is provided, the I²C master must provide another I²C frame, as shown in Figure 34, containing the device address and the read bit. After this frame, the device provides the register data. The device provides data for the next register when more clocks are provided. When data are read from addresses that do not exist in the register map of the device, the device returns zeros. If the device does not have any further registers to provide data on, the device provide zeros. To end the register read command, the master must provide a STOP or a RESTART condition in the I²C frame.

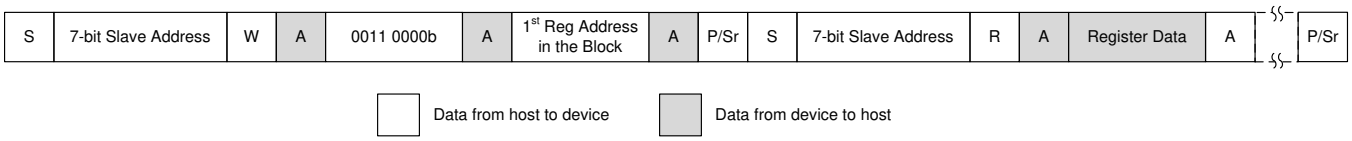

NOTE: S = start, Sr = repeated start, and P = stop.

Figure 34. Reading a Continuous Block of Registers

8.5.2 Writing Registers

The I²C master can either write a single register or a continuous block of registers to the device, set a few bits in a register, or clear a few bits in a register.

8.5.2.1 Single Register Write

To write a single register from the device, as shown in Figure 35, the I²C master must provide an I²C command with four frames. The register address is the address of the register that must be written and the register data is the value that must be written. Table 9 lists the opcodes for different commands. To end the register write command, the master must provide a STOP or a RESTART condition in the I²C frame.

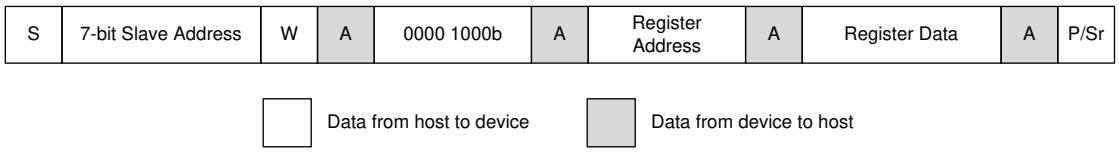

NOTE: S = start, Sr = repeated start, and P = stop.

Figure 35. Writing a Single Register

8.5.2.2 Set Bit

The I²C master must provide an I²C command with four frames, as shown in Figure 35, to set bits in a register without changing the other bits. The register address is the address of the register that the bits must set and the register data is the value representing the bits that must be set. Bits with a value of 1 in the register data are set and bits with a value of 0 in the register data are not changed. Table 9 lists the opcodes for different commands. To end this command, the master must provide a STOP or RESTART condition in the I²C frame.

8.5.2.3 Clear Bit

The I²C master must provide an I²C command with four frames, as shown in Figure 35, to clear bits in a register without changing the other bits. The register address is the address of the register that the bits must clear and the register data is the value representing the bits that must be cleared. Bits with a value of 1 in the register data are cleared and bits with a value of 0 in the register data are not changed. Table 9 lists the opcodes for different commands. To end this command, the master must provide a STOP or a RESTART condition in the I²C frame.

8.5.2.4 Writing a Continuous Block of Registers

The I^{2}C master must provide an I^{2}C command, as shown in Figure 36, to write a continuous block of registers. The register address is the address of the first register in the block that must be written. The I^{2}C master must provide data for registers in subsequent I^{2}C frames in an ascending order of register addresses. Writing data to addresses that do not exist in the register map of the device have no effect. Table 9 lists the opcodes for different commands. If the data provided by the I^{2}C master exceeds the address space of the device, the device ignores the data beyond the address space. To end the register write command, the master must provide a STOP or a RESTART condition in the I^{2}C frame.

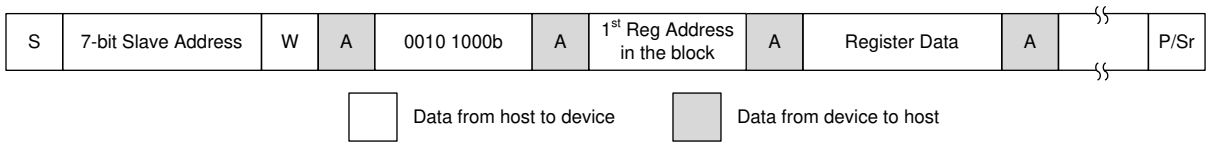

NOTE: S = start, Sr = repeated start, and P = stop.

Figure 36. Writing a Continuous Block of Registers

Copyright © 2019–2020, Texas Instruments Incorporated

8.6 ADS7138 Registers

Table 10 lists the ADS7138 registers. All register offset addresses not listed in Table 10 should be considered as reserved locations and the register contents should not be modified.

Table 10. ADS7138 Registers

Address	Acronym	Register Name	Section
0x0	SYSTEM_STATUS		SYSTEM_STATUS Register (Address = 0x0) [reset = 0x81]
0x1	GENERAL_CFG		GENERAL_CFG Register (Address = 0x1) [reset = 0x0]
0x2	DATA_CFG		DATA_CFG Register (Address = 0x2) [reset = 0x0]
0x3	OSR_CFG		OSR_CFG Register (Address = 0x3) [reset = 0x0]
0x4	OPMODE_CFG		OPMODE_CFG Register (Address = 0x4) [reset = 0x0]
0x5	PIN_CFG		PIN_CFG Register (Address = 0x5) [reset = 0x0]
0x7	GPIO_CFG		GPIO_CFG Register (Address = 0x7) [reset = 0x0]
0x9	GPO_DRIVE_CFG		GPO_DRIVE_CFG Register (Address = 0x9) [reset = 0x0]
0xB	GPO_VALUE		GPO_VALUE Register (Address = 0xB) [reset = 0x0]
0xD	GPI_VALUE		GPI_VALUE Register (Address = 0xD) [reset = 0x0]
0x10	SEQUENCE_CFG		SEQUENCE_CFG Register (Address = 0x10) [reset = 0x0]
0x11	CHANNEL_SEL		CHANNEL_SEL Register (Address = 0x11) [reset = 0x0]
0x12	AUTO_SEQ_CH_SEL		AUTO_SEQ_CH_SEL Register (Address = 0x12) [reset = 0x0]
0x14	ALERT_CH_SEL		ALERT_CH_SEL Register (Address = 0x14) [reset = 0x0]
0x16	ALERT_MAP		ALERT_MAP Register (Address = 0x16) [reset = 0x0]
0x17	ALERT_PIN_CFG		ALERT_PIN_CFG Register (Address = 0x17) [reset = 0x0]
0x18	EVENT_FLAG		EVENT_FLAG Register (Address = 0x18) [reset = 0x0]
0x1A	EVENT_HIGH_FLAG		EVENT_HIGH_FLAG Register (Address = 0x1A) [reset = 0x0]
0x1C	EVENT_LOW_FLAG		EVENT_LOW_FLAG Register (Address = 0x1C) [reset = 0x0]
0x1E	EVENT_RGN		EVENT_RGN Register (Address = 0x1E) [reset = 0x0]
0x20	HYSTERESIS_CH0		HYSTERESIS_CH0 Register (Address = 0x20) [reset = 0xF0]
0x21	HIGH_TH_CH0		HIGH_TH_CH0 Register (Address = 0x21) [reset = 0xFF]
0x22	EVENT_COUNT_CH0		EVENT_COUNT_CH0 Register (Address = 0x22) [reset = 0x0]
0x23	LOW_TH_CH0		LOW_TH_CH0 Register (Address = 0x23) [reset = 0x0]
0x24	HYSTERESIS_CH1		HYSTERESIS_CH1 Register (Address = 0x24) [reset = 0xF0]
0x25	HIGH_TH_CH1		HIGH_TH_CH1 Register (Address = 0x25) [reset = 0xFF]
0x26	EVENT_COUNT_CH1		EVENT_COUNT_CH1 Register (Address = 0x26) [reset = 0x0]
0x27	LOW_TH_CH1		LOW_TH_CH1 Register (Address = 0x27) [reset = 0x0]
0x28	HYSTERESIS_CH2		HYSTERESIS_CH2 Register (Address = 0x28) [reset = 0xF0]
0x29	HIGH_TH_CH2		HIGH_TH_CH2 Register (Address = 0x29) [reset = 0xFF]
0x2A	EVENT_COUNT_CH2		EVENT_COUNT_CH2 Register (Address = 0x2A) [reset = 0x0]
0x2B	LOW_TH_CH2		LOW_TH_CH2 Register (Address = 0x2B) [reset = 0x0]
0x2C	HYSTERESIS_CH3		HYSTERESIS_CH3 Register (Address = 0x2C) [reset = 0xF0]
0x2D	HIGH_TH_CH3		HIGH_TH_CH3 Register (Address = 0x2D) [reset = 0xFF]
0x2E	EVENT_COUNT_CH3		EVENT_COUNT_CH3 Register (Address = 0x2E) [reset = 0x0]
0x2F	LOW_TH_CH3		LOW_TH_CH3 Register (Address = 0x2F) [reset = 0x0]
0x30	HYSTERESIS_CH4		HYSTERESIS_CH4 Register (Address = 0x30) [reset = 0xF0]
0x31	HIGH_TH_CH4		HIGH_TH_CH4 Register (Address = 0x31) [reset = 0xFF]
0x32	EVENT_COUNT_CH4		EVENT_COUNT_CH4 Register (Address = 0x32) [reset = 0x0]
0x33	LOW_TH_CH4		LOW_TH_CH4 Register (Address = 0x33) [reset = 0x0]
0x34	HYSTERESIS_CH5		HYSTERESIS_CH5 Register (Address = 0x34) [reset = 0xF0]
0x35	HIGH_TH_CH5		HIGH_TH_CH5 Register (Address = 0x35) [reset = 0xFF]
0x36	EVENT_COUNT_CH5		EVENT_COUNT_CH5 Register (Address = 0x36) [reset = 0x0]

Copyright © 2019–2020, Texas Instruments Incorporated

Table 10. ADS7138 Registers (continued)

Address	Acronym	Register Name	Section
0x37	LOW_TH_CH5		LOW_TH_CH5 Register (Address = 0x37) [reset = 0x0]
0x38	HYSTERESIS_CH6		HYSTERESIS_CH6 Register (Address = 0x38) [reset = 0xF0]
0x39	HIGH_TH_CH6		HIGH_TH_CH6 Register (Address = 0x39) [reset = 0xFF]
0x3A	EVENT_COUNT_CH6		EVENT_COUNT_CH6 Register (Address = 0x3A) [reset = 0x0]
0x3B	LOW_TH_CH6		LOW_TH_CH6 Register (Address = 0x3B) [reset = 0x0]
0x3C	HYSTERESIS_CH7		HYSTERESIS_CH7 Register (Address = 0x3C) [reset = 0xF0]
0x3D	HIGH_TH_CH7		HIGH_TH_CH7 Register (Address = 0x3D) [reset = 0xFF]
0x3E	EVENT_COUNT_CH7		EVENT_COUNT_CH7 Register (Address = 0x3E) [reset = 0x0]
0x3F	LOW_TH_CH7		LOW_TH_CH7 Register (Address = 0x3F) [reset = 0x0]
0x60	MAX_CH0_LSB		MAX_CH0_LSB Register (Address = 0x60) [reset = 0x0]
0x61	MAX_CH0_MSB		MAX_CH0_MSB Register (Address = 0x61) [reset = 0x0]
0x62	MAX_CH1_LSB		MAX_CH1_LSB Register (Address = 0x62) [reset = 0x0]
0x63	MAX_CH1_MSB		MAX_CH1_MSB Register (Address = 0x63) [reset = 0x0]
0x64	MAX_CH2_LSB		MAX_CH2_LSB Register (Address = 0x64) [reset = 0x0]
0x65	MAX_CH2_MSB		MAX_CH2_MSB Register (Address = 0x65) [reset = 0x0]
0x66	MAX_CH3_LSB		MAX_CH3_LSB Register (Address = 0x66) [reset = 0x0]
0x67	MAX_CH3_MSB		MAX_CH3_MSB Register (Address = 0x67) [reset = 0x0]
0x68	MAX_CH4_LSB		MAX_CH4_LSB Register (Address = 0x68) [reset = 0x0]
0x69	MAX_CH4_MSB		MAX_CH4_MSB Register (Address = 0x69) [reset = 0x0]
0x6A	MAX_CH5_LSB		MAX_CH5_LSB Register (Address = 0x6A) [reset = 0x0]
0x6B	MAX_CH5_MSB		MAX_CH5_MSB Register (Address = 0x6B) [reset = 0x0]
0x6C	MAX_CH6_LSB		MAX_CH6_LSB Register (Address = 0x6C) [reset = 0x0]
0x6D	MAX_CH6_MSB		MAX_CH6_MSB Register (Address = 0x6D) [reset = 0x0]
0x6E	MAX_CH7_LSB		MAX_CH7_LSB Register (Address = 0x6E) [reset = 0x0]
0x6F	MAX_CH7_MSB		MAX_CH7_MSB Register (Address = 0x6F) [reset = 0x0]
0x80	MIN_CH0_LSB		MIN_CH0_LSB Register (Address = 0x80) [reset = 0xFF]
0x81	MIN_CH0_MSB		MIN_CH0_MSB Register (Address = 0x81) [reset = 0xFF]
0x82	MIN_CH1_LSB		MIN_CH1_LSB Register (Address = 0x82) [reset = 0xFF]
0x83	MIN_CH1_MSB		MIN_CH1_MSB Register (Address = 0x83) [reset = 0xFF]
0x84	MIN_CH2_LSB		MIN_CH2_LSB Register (Address = 0x84) [reset = 0xFF]
0x85	MIN_CH2_MSB		MIN_CH2_MSB Register (Address = 0x85) [reset = 0xFF]
0x86	MIN_CH3_LSB		MIN_CH3_LSB Register (Address = 0x86) [reset = 0xFF]
0x87	MIN_CH3_MSB		MIN_CH3_MSB Register (Address = 0x87) [reset = 0xFF]
0x88	MIN_CH4_LSB		MIN_CH4_LSB Register (Address = 0x88) [reset = 0xFF]
0x89	MIN_CH4_MSB		MIN_CH4_MSB Register (Address = 0x89) [reset = 0xFF]
0x8A	MIN_CH5_LSB		MIN_CH5_LSB Register (Address = 0x8A) [reset = 0xFF]
0x8B	MIN_CH5_MSB		MIN_CH5_MSB Register (Address = 0x8B) [reset = 0xFF]
0x8C	MIN_CH6_LSB		MIN_CH6_LSB Register (Address = 0x8C) [reset = 0xFF]
0x8D	MIN_CH6_MSB		MIN_CH6_MSB Register (Address = 0x8D) [reset = 0xFF]
0x8E	MIN_CH7_LSB		MIN_CH7_LSB Register (Address = 0x8E) [reset = 0xFF]
0x8F	MIN_CH7_MSB		MIN_CH7_MSB Register (Address = 0x8F) [reset = 0xFF]
0xA0	RECENT_CH0_LSB		RECENT_CH0_LSB Register (Address = 0xA0) [reset = 0x0]
0xA1	RECENT_CH0_MSB		RECENT_CH0_MSB Register (Address = 0xA1) [reset = 0x0]
0xA2	RECENT_CH1_LSB		RECENT_CH1_LSB Register (Address = 0xA2) [reset = 0x0]
0xA3	RECENT_CH1_MSB		RECENT_CH1_MSB Register (Address = 0xA3) [reset = 0x0]
0xA4	RECENT_CH2_LSB		RECENT_CH2_LSB Register (Address = 0xA4) [reset = 0x0]
0xA5	RECENT_CH2_MSB		RECENT_CH2_MSB Register (Address = 0xA5) [reset = 0x0]

Copyright © 2019–2020, Texas Instruments Incorporated

Table 10. ADS7138 Registers (continued)

Address	Acronym	Register Name	Section
0xA6	RECENT_CH3_LSB		RECENT_CH3_LSB Register (Address = 0xA6) [reset = 0x0]
0xA7	RECENT_CH3_MSB		RECENT_CH3_MSB Register (Address = 0xA7) [reset = 0x0]
0xA8	RECENT_CH4_LSB		RECENT_CH4_LSB Register (Address = 0xA8) [reset = 0x0]
0xA9	RECENT_CH4_MSB		RECENT_CH4_MSB Register (Address = 0xA9) [reset = 0x0]
0xAA	RECENT_CH5_LSB		RECENT_CH5_LSB Register (Address = 0xAA) [reset = 0x0]
0xAB	RECENT_CH5_MSB		RECENT_CH5_MSB Register (Address = 0xAB) [reset = 0x0]
0xAC	RECENT_CH6_LSB		RECENT_CH6_LSB Register (Address = 0xAC) [reset = 0x0]
0xAD	RECENT_CH6_MSB		RECENT_CH6_MSB Register (Address = 0xAD) [reset = 0x0]
0xAE	RECENT_CH7_LSB		RECENT_CH7_LSB Register (Address = 0xAE) [reset = 0x0]
0xAF	RECENT_CH7_MSB		RECENT_CH7_MSB Register (Address = 0xAF) [reset = 0x0]
0xC3	GPO0_TRIG_EVENT_SEL		GPO0_TRIG_EVENT_SEL Register (Address = 0xC3) [reset = 0x2]
0xC5	GPO1_TRIG_EVENT_SEL		GPO1_TRIG_EVENT_SEL Register (Address = 0xC5) [reset = 0x2]
0xC7	GPO2_TRIG_EVENT_SEL		GPO2_TRIG_EVENT_SEL Register (Address = 0xC7) [reset = 0x2]
0xC9	GPO3_TRIG_EVENT_SEL		GPO3_TRIG_EVENT_SEL Register (Address = 0xC9) [reset = 0x2]
0xCB	GPO4_TRIG_EVENT_SEL		GPO4_TRIG_EVENT_SEL Register (Address = 0xCB) [reset = 0x2]
0xCD	GPO5_TRIG_EVENT_SEL		GPO5_TRIG_EVENT_SEL Register (Address = 0xCD) [reset = 0x2]
0xCF	GPO6_TRIG_EVENT_SEL		GPO6_TRIG_EVENT_SEL Register (Address = 0xCF) [reset = 0x2]
0xD1	GPO7_TRIG_EVENT_SEL		GPO7_TRIG_EVENT_SEL Register (Address = 0xD1) [reset = 0x2]
0xE9	GPO_TRIGGER_CFG		GPO_TRIGGER_CFG Register (Address = 0xE9) [reset = 0x0]
0xEB	GPO_VALUE_TRIG		GPO_VALUE_TRIG Register (Address = 0xEB) [reset = 0x0]

Complex bit access types are encoded to fit into small table cells. Table 11 shows the codes that are used for access types in this section.

Table 11. ADS7138 Access Type Codes

Access Type	Code	Description
Read Type		
R	R	Read
Write Type		
W	W	Write
Reset or Default Value		
-n		Value after reset or the default value
Register Array Variables		
i,j,k,l,m,n		When these variables are used in a register name, an offset, or an address, they refer to the value of a register array where the register is part of a group of repeating registers. The register groups form a hierarchical structure and the array is represented with a formula.
y		When this variable is used in a register name, an offset, or an address it refers to the value of a register array.

8.6.1 SYSTEM_STATUS Register (Address = 0x0) [reset = 0x81]

SYSTEM_STATUS is shown in Figure 37 and described in Table 12.

Return to the Summary Table.

Figure 37. SYSTEM_STATUS Register

7	6	5	4	3	2	1	0
RSVD	SEQ_STATUS	I^2C_SPEED	RESERVED	OSR_DONE	CRC_ERR_FUSE	CRC_ERR_IN	BOR
R-1b	R-0b	R-0b	R-0b	R/W-0b	R-0b	R/W-0b	R/W-1b

Table 12. SYSTEM_STATUS Register Field Descriptions

Bit	Field	Type	Reset	Description
7	RSVD	R	1b	Reads return 1b.
6	SEQ_STATUS	R	0b	Status of the channel sequencer. 0b = Sequence stopped 1b = Sequence in progress
5	I^2C_SPEED	R	0b	I^2C high-speed status. 0b = I^2C bus is not in high-speed mode. 1b = I^2C bus is in high-speed mode.
4	RESERVED	R	0b	Reserved. Reads return 0.
3	OSR_DONE	R/W	0b	Averaging status. Clear this bit by writing 1b to this bit. 0b = Averaging in progress or not started; average result is not ready. 1b = Averaging complete; average result is ready.
2	CRC_ERR_FUSE	R	0b	Device power-up configuration CRC check status. To re-evaluate this bit, software reset the device or power cycle AVDD. 0b = No problems detected in power-up configuration. 1b = Device configuration not loaded correctly.
1	CRC_ERR_IN	R/W	0b	Status of CRC check on incoming data. Write 1b to clear this error flag. 0b = No CRC error. 1b = CRC error detected. All register writes, except to addresses 0x00 and 0x01, are blocked.
0	BOR	R/W	1b	Brown out reset indicator. This bit is set if brown out condition occurs or device is power cycled. Write 1b to this bit to clear the flag. 0b = No brown out from last time this bit was cleared. 1b = Brown out condition detected or device power cycled.

8.6.2 GENERAL_CFG Register (Address = 0x1) [reset = 0x0]

GENERAL_CFG is shown in Figure 38 and described in Table 13.

Return to the Summary Table.

Figure 38. GENERAL_CFG Register

7	6	5	4	3	2	1	0
RESERVED	CRC_EN	STATS_EN	DWC_EN	CNVST	CH_RST	CAL	RST
R-0b	R/W-0b	R/W-0b	R/W-0b	W-0b	R/W-0b	R/W-0b	W-0b

Table 13. GENERAL_CFG Register Field Descriptions

Bit	Field	Type	Reset	Description
7	RESERVED	R	0b	Reserved. Reads return 0.
6	CRC_EN	R/W	0b	Enable or disable the CRC on device interface. 0b = CRC module disabled. 1b = CRC appended to data output. CRC check is enabled on incoming data.

Copyright © 2019–2020, Texas Instruments Incorporated

Table 13. GENERAL_CFG Register Field Descriptions (continued)

Bit	Field	Type	Reset	Description
5	STATS_EN	R/W	0b	Enable or disable the statistics module to update minimu, maximum, and latest output code registers. 0b = Statistics registers are not updated. 1b = Clear statistics registers and conitnue updating with new conversion results.
4	DWC_EN	R/W	0b	Enable or disable the digital window comparator. 0b = Reset or disable the digital window comparator. 1b = Enable the digital window comparator.
3	CNVST	W	0b	Control start conversion on selected analog input. Readback of this bit returns 0b. 0b = Normal operation; conversions starts on the 9th falling edge of I2C frame. Device stretches SCL until end of conversion or completion of averaging. 1b = Initiate start of conversion. Device does not stretch SCL until end of conversion or completion of averaging.
2	CH_RST	R/W	0b	Force all channels to be analog inputs. 0b = Normal operation. 1b = All channels are configured as analog inputs irrespective of configuration in other registers.
1	CAL	R/W	0b	Calibrate ADC offset. 0b = Normal operation. 1b = ADC offset is calibrated. After calibration is complete, this bit is set to 0b.
0	RST	W	0b	Software reset all registers to default values. 0b = Normal operation. 1b = Device is reset. After reset is complete, this bit is set to 0b and BOR bit is set to 1b.

8.6.3 DATA_CFG Register (Address = 0x2) [reset = 0x0]

DATA_CFG is shown in Figure 39 and described in Table 14.

Return to the Summary Table.

Figure 39. DATA_CFG Register

7	6	5	4	3	2	1	0
FIX_PAT	RESERVED	APPEND_STATUS[1:0]		RESERVED			
R/W-0b	R-0b	R/W-0b		R-0b			

Table 14. DATA_CFG Register Field Descriptions

Bit	Field	Type	Reset	Description
7	FIX_PAT	R/W	0b	Device will output fixed data bits, which can be helpful for debugging communication with the device. 0b = Normal operation. 1b = Device outputs fixed code 0xA5A repeatitively when reading ADC data.
6	RESERVED	R	0b	Reserved. Reads return 0.
5-4	APPEND_STATUS[1:0]	R/W	0b	Append 4-bit channel ID or status flags to output data. 0b = Channel ID and status flags are not appended to ADC data. 1b = 4-bit channel ID is appended to ADC data. 10b = 4-bit status flags are appended to ADC data. 11b = Reserved.
3-0	RESERVED	R	0b	

8.6.4 OSR_CFG Register (Address = 0x3) [reset = 0x0]

OSR_CFG is shown in Figure 40 and described in Table 15.

Return to the Summary Table.

Figure 40. OSR_CFG Register

7	6	5	4	3	2	1	0
RESERVED					OSR[2:0]		
R-0b					R/W-0b		

Table 15. OSR_CFG Register Field Descriptions

Bit	Field	Type	Reset	Description
7-3	RESERVED	R	0b	Reserved. Reads return 0.
2-0	OSR[2:0]	R/W	0b	Selects the oversampling ratio for ADC conversion result. 0b = No averaging 1b = 2 samples 10b = 4 samples 11b = 8 samples 100b = 16 samples 101b = 32 samples 110b = 64 samples 111b = 128 samples

8.6.5 OPMODE_CFG Register (Address = 0x4) [reset = 0x0]

OPMODE_CFG is shown in Figure 41 and described in Table 16.

Return to the Summary Table.

Figure 41. OPMODE_CFG Register

7	6	5	4	3	2	1	0
CONV_ON_ERR	CONV_MODE[1:0]		OSC_SEL	CLK_DIV[3:0]			
R/W-0b	R/W-0b		R/W-0b	R/W-0b			

Table 16. OPMODE_CFG Register Field Descriptions

Bit	Field	Type	Reset	Description
7	CONV_ON_ERR	R/W	0b	Control continuation of autonomous modes if CRC error is detected on communication interface. 0b = If CRC error is detected, device continues channel sequencing and pin configuration is retained. See the CRC_ERR_IN bit for more details. 1b = If CRC error is detected, device changes all channels to analog inputs and channel sequencing will be paused until CRC_ERR_IN = 1b. After clearing CRC_ERR_IN flag, device resumes channel sequencing and pin confguration is restored.
6-5	CONV_MODE[1:0]	R/W	0b	These bits set the mode of conversion of the ADC. 0b = Manual mode; conversions are initiated by host. 1b = Autonomous mode; conversions are initiated by internal state machine.
4	OSC_SEL	R/W	0b	Selects the oscillator for internal timing generation. 0b = High-speed oscillator. 1b = Low-power oscillator.
3-0	CLK_DIV[3:0]	R/W	0b	Sampling speed control in autonomous monitoring mode (CONV_MODE = 01b). See the section on oscillator and timing control for details.

Copyright © 2019–2020, Texas Instruments Incorporated

8.6.6 PIN_CFG Register (Address = 0x5) [reset = 0x0]

PIN_CFG is shown in Figure 42 and described in Table 17.

Return to the Summary Table.

Figure 42. PIN_CFG Register

7	6	5	4	3	2	1	0
PIN_CFG[7:0]							
R/W-0b							

Table 17. PIN_CFG Register Field Descriptions

Bit	Field	Type	Reset	Description
7-0	PIN_CFG[7:0]	R/W	0b	Configure device channels AIN/GPIO[7:0] as analog inputs or GPIOs. 0b = Channel is configured as analog input. 1b = Channel is configured as GPIO.

8.6.7 GPIO_CFG Register (Address = 0x7) [reset = 0x0]

GPIO_CFG is shown in Figure 43 and described in Table 18.

Return to the Summary Table.

Figure 43. GPIO_CFG Register

7	6	5	4	3	2	1	0
GPIO_CFG[7:0]							
R/W-0b							

Table 18. GPIO_CFG Register Field Descriptions

Bit	Field	Type	Reset	Description
7-0	GPIO_CFG[7:0]	R/W	0b	Configure GPIO[7:0] as either digital inputs or digital outputs. 0b = GPIO is configured as digital input. 1b = GPIO is configured as digital output.

8.6.8 GPO_DRIVE_CFG Register (Address = 0x9) [reset = 0x0]

GPO_DRIVE_CFG is shown in Figure 44 and described in Table 19.

Return to the Summary Table.

Figure 44. GPO_DRIVE_CFG Register

7	6	5	4	3	2	1	0
GPO_DRIVE_CFG[7:0]							
R/W-0b							

Table 19. GPO_DRIVE_CFG Register Field Descriptions

Bit	Field	Type	Reset	Description
7-0	GPO_DRIVE_CFG[7:0]	R/W	0b	Configure digital outputs GPO[7:0] as either open-drain or push-pull outputs. 0b = Digital output is open-drain; connect external pullup resistor. 1b = Push-pull driver is used for digital output.

Copyright © 2019–2020, Texas Instruments Incorporated

8.6.9 GPO_VALUE Register (Address = 0xB) [reset = 0x0]

GPO_VALUE is shown in Figure 45 and described in Table 20.

Return to the Summary Table.

Figure 45. GPO_VALUE Register

7	6	5	4	3	2	1	0
GPO_VALUE[7:0]							
R/W-0b							

Table 20. GPO_VALUE Register Field Descriptions

Bit	Field	Type	Reset	Description
7-0	GPO_VALUE[7:0]	R/W	0b	Logic level to be set on digital outputs GPO[7:0]. 0b = Digital output set to logic 0. 1b = Digital output set to logic 1.

8.6.10 GPI_VALUE Register (Address = 0xD) [reset = 0x0]

GPI_VALUE is shown in Figure 46 and described in Table 21.

Return to the Summary Table.

Figure 46. GPI_VALUE Register

7	6	5	4	3	2	1	0
GPI_VALUE[7:0]							
R-0b							

Table 21. GPI_VALUE Register Field Descriptions

Bit	Field	Type	Reset	Description
7-0	GPI_VALUE[7:0]	R	0b	Readback the logic level on GPIO[7:0]. 0b = GPIO is at logic 0. 1b = GPIO is at logic 1.

8.6.11 SEQUENCE_CFG Register (Address = 0x10) [reset = 0x0]

SEQUENCE_CFG is shown in Figure 47 and described in Table 22.

Return to the Summary Table.

Figure 47. SEQUENCE_CFG Register

7	6	5	4	3	2	1	0
RESERVED			SEQ_START	RESERVED		SEQ_MODE[1:0]	
R-0b			R/W-0b	R-0b		R/W-0b	

Table 22. SEQUENCE_CFG Register Field Descriptions

Bit	Field	Type	Reset	Description
7-5	RESERVED	R	0b	Reserved. Reads return 0.
4	SEQ_START	R/W	0b	Control for start of channel sequence when using auto sequence mode (SEQ_MODE = 01b). 0b = Stop channel sequencing. 1b = Start channel sequencing in ascending order for channels enabled in AUTO_SEQ_CH_SEL register.
3-2	RESERVED	R	0b	Reserved. Reads return 0.

Copyright © 2019–2020, Texas Instruments Incorporated

Table 22. SEQUENCE_CFG Register Field Descriptions (continued)

Bit	Field	Type	Reset	Description
1-0	SEQ_MODE[1:0]	R/W	0b	Selects the mode of scanning of analog input channels. 0b = Manual sequence mode; channel selected by MANUAL_CHID field. 1b = Auto sequence mode; channel selected by internal channel sequencer. 10b = Reserved. 11b = Reserved.

8.6.12 CHANNEL_SEL Register (Address = 0x11) [reset = 0x0]

CHANNEL_SEL is shown in Figure 48 and described in Table 23.

Return to the Summary Table.

Figure 48. CHANNEL_SEL Register

7	6	5	4	3	2	1	0
RESERVED				MANUAL_CHID[3:0]			
R-0b				R/W-0b			

Table 23. CHANNEL_SEL Register Field Descriptions

Bit	Field	Type	Reset	Description
7-4	RESERVED	R	0b	Reserved. Reads return 0.
3-0	MANUAL_CHID[3:0]	R/W	0b	In manual mode (SEQ_MODE = 00b), this field contains the 4-bit channel ID of the analog input channel for next ADC conversion. For valid ADC data, the selected channel must not be configured as GPIO in PIN_CFG register. 0b = AIN0 1b = AIN1 10b = AIN2 11b = AIN3 100b = AIN4 101b = AIN5 110b = AIN6 111b = AIN7 1000b = Reserved.

8.6.13 AUTO_SEQ_CH_SEL Register (Address = 0x12) [reset = 0x0]

AUTO_SEQ_CH_SEL is shown in Figure 49 and described in Table 24.

Return to the Summary Table.

Figure 49. AUTO_SEQ_CH_SEL Register

7	6	5	4	3	2	1	0
AUTO_SEQ_CH_SEL[7:0]							
R/W-0b							

Table 24. AUTO_SEQ_CH_SEL Register Field Descriptions

Bit	Field	Type	Reset	Description
7-0	AUTO_SEQ_CH_SEL[7:0]	R/W	0b	Select analog input channels AIN[7:0] in for auto sequencing mode. 0b = Analog input channel is not enabled in scanning sequence. 1b = Analog input channel is enabled in scanning sequence.

Copyright © 2019–2020, Texas Instruments Incorporated

8.6.14 ALERT_CH_SEL Register (Address = 0x14) [reset = 0x0]

ALERT_CH_SEL is shown in Figure 50 and described in Table 25.

Return to the Summary Table.

Figure 50. ALERT_CH_SEL Register

7	6	5	4	3	2	1	0
ALERT_CH_SEL[7:0]							
R/W-0b							

Table 25. ALERT_CH_SEL Register Field Descriptions

Bit	Field	Type	Reset	Description
7-0	ALERT_CH_SEL[7:0]	R/W	0b	Select channels for which the alert flags can assert the ALERT pin. 0b = Alert flags for this channel do not assert the ALERT pin. 1b = Alert flags for this channel assert the ALERT pin.

8.6.15 ALERT_MAP Register (Address = 0x16) [reset = 0x0]

ALERT_MAP is shown in Figure 51 and described in Table 26.

Return to the Summary Table.

Figure 51. ALERT_MAP Register

7	6	5	4	3	2	1	0
RESERVED							ALERT_CRCIN
R-0b							R/W-0b

Table 26. ALERT_MAP Register Field Descriptions

Bit	Field	Type	Reset	Description
7-1	RESERVED	R	0b	Reserved. Reads return 0.
0	ALERT_CRCIN	R/W	0b	Enable or disable the alert notification for CRC error on input data (CRCERR_IN = 1b). 0b = ALERT pin is not asserted when CRCERR_IN = 1b. 1b = ALERT pin is asserted when CRCERR_IN = 1b. Clear CRCERR_IN for deasserting the ALERT pin.

8.6.16 ALERT_PIN_CFG Register (Address = 0x17) [reset = 0x0]

ALERT_PIN_CFG is shown in Figure 52 and described in Table 27.

Return to the Summary Table.

Figure 52. ALERT_PIN_CFG Register

7	6	5	4	3	2	1	0
RESERVED					ALERT_DRIVE	ALERT_LOGIC[1:0]	
R-0b					R/W-0b	R/W-0b	

Table 27. ALERT_PIN_CFG Register Field Descriptions

Bit	Field	Type	Reset	Description
7-3	RESERVED	R	0b	Reserved. Reads return 0.
2	ALERT_DRIVE	R/W	0b	Configure output drive of the ALERT pin. 0b = Open-drain output. Connect external pullup resistor. 1b = Push-pull output.

Copyright © 2019–2020, Texas Instruments Incorporated

Table 27. ALERT_PIN_CFG Register Field Descriptions (continued)

Bit	Field	Type	Reset	Description
1-0	ALERT_LOGIC[1:0]	R/W	0b	Configure how ALERT pin is asserted. 0b = Active low. 1b = Active high. 10b = Pulsed low (one logic low pulse one time per alert flag). 11b = Pulsed high (one logic high pulse one time per alert flag).

8.6.17 EVENT_FLAG Register (Address = 0x18) [reset = 0x0]

EVENT_FLAG is shown in Figure 53 and described in Table 28.

Return to the Summary Table.

Figure 53. EVENT_FLAG Register

7	6	5	4	3	2	1	0
EVENT_FLAG[7:0]							
R-0b							

Table 28. EVENT_FLAG Register Field Descriptions

Bit	Field	Type	Reset	Description
7-0	EVENT_FLAG[7:0]	R	0b	Alert flags indicating digital window comparator status for CH[7:0]. Clear individual bits of EVENT_HIGH_FLAG or EVENT_LOW_FLAG registers to clear the corresponding alert flag. 0b = Event condition not detected. 1b = Event condition detected.

8.6.18 EVENT_HIGH_FLAG Register (Address = 0x1A) [reset = 0x0]

EVENT_HIGH_FLAG is shown in Figure 54 and described in Table 29.

Return to the Summary Table.

Figure 54. EVENT_HIGH_FLAG Register

7	6	5	4	3	2	1	0
EVENT_HIGH_FLAG[7:0]							
R/W-0b							

Table 29. EVENT_HIGH_FLAG Register Field Descriptions

Bit	Field	Type	Reset	Description
7-0	EVENT_HIGH_FLAG[7:0]	R/W	0b	Alert flag corresponding to high threshold of analog input or logic 1 on digital input on CH[7:0]. Write 1b to clear this flag. 0b = No alert condition detected. 1b = Either high threshold was exceeded (analog input) or logic 1 was detected (digital input).

8.6.19 EVENT_LOW_FLAG Register (Address = 0x1C) [reset = 0x0]

EVENT_LOW_FLAG is shown in Figure 55 and described in Table 30.

Return to the Summary Table.

Figure 55. EVENT_LOW_FLAG Register

7	6	5	4	3	2	1	0
EVENT_LOW_FLAG[7:0]							
R/W-0b							

Table 30. EVENT_LOW_FLAG Register Field Descriptions

Bit	Field	Type	Reset	Description
7-0	EVENT_LOW_FLAG[7:0]	R/W	0b	Alert flag corresponding to low threshold of analog input or logic 0 on digital input on CH[7:0]. Write 1b to clear this flag. 0b = No Event condition detected. 1b = Either low threshold was exceeded (analog input) or logic 0 was detected (digital input).

8.6.20 EVENT_RGN Register (Address = 0x1E) [reset = 0x0]

EVENT_RGN is shown in Figure 56 and described in Table 31.

Return to the Summary Table.

Figure 56. EVENT_RGN Register

7	6	5	4	3	2	1	0
EVENT_RGN[7:0]							
R/W-0b							

Table 31. EVENT_RGN Register Field Descriptions

Bit	Field	Type	Reset	Description
7-0	EVENT_RGN[7:0]	R/W	0b	Choice of region used in monitoring analog and digital inputs CH[7:0]. 0b = Alert flag is set if: (conversion result < low threshold) or (conversion result > high threshold). For digital inputs, logic 1 sets the alert flag. 1b = Alert flag is set if: (low threshold > conversion result < high threshold). For digital inputs, logic 0 sets the alert flag.

8.6.21 HYSTERESIS_CH0 Register (Address = 0x20) [reset = 0xF0]

HYSTERESIS_CH0 is shown in Figure 57 and described in Table 32.

Return to the Summary Table.

Figure 57. HYSTERESIS_CH0 Register

7	6	5	4	3	2	1	0
HIGH_THRESHOLD_CH0_LSB[3:0]				HYSTERESIS_CH0[3:0]			
R/W-1111b				R/W-0b			

Table 32. HYSTERESIS_CH0 Register Field Descriptions

Bit	Field	Type	Reset	Description
7-4	HIGH_THRESHOLD_CH0_LSB[3:0]	R/W	1111b	Lower 4-bits of high threshold for analog input. These bits are compared with bits 3:0 of ADC conversion result.
3-0	HYSTERESIS_CH0[3:0]	R/W	0b	4-bit hysteresis for high and low thresholds. This 4-bit hysteris is left shifted 3 times and applied on the lower 7-bits of the threshold. Total hysteresis = 7-bits [4-bits, 000b]

8.6.22 HIGH_TH_CH0 Register (Address = 0x21) [reset = 0xFF]

HIGH_TH_CH0 is shown in Figure 58 and described in Table 33.

Return to the Summary Table.

Copyright © 2019–2020, Texas Instruments Incorporated

Figure 58. HIGH_TH_CH0 Register

7	6	5	4	3	2	1	0
HIGH_THRESHOLD_CH0_MSB[7:0]							
R/W-11111111b							

Table 33. HIGH_TH_CH0 Register Field Descriptions

Bit	Field	Type	Reset	Description
7-0	HIGH_THRESHOLD_CH0_MSB[7:0]	R/W	11111111b	MSB aligned high threshold for analog input. These bits are compared with top 8 bits of ADC conversion result.

8.6.23 EVENT_COUNT_CH0 Register (Address = 0x22) [reset = 0x0]

EVENT_COUNT_CH0 is shown in Figure 59 and described in Table 34.

Return to the Summary Table.

Figure 59. EVENT_COUNT_CH0 Register

7	6	5	4	3	2	1	0
LOW_THRESHOLD_CH0_LSB[3:0]				EVENT_COUNT_CH0[3:0]			
R/W-0b				R/W-0b			

Table 34. EVENT_COUNT_CH0 Register Field Descriptions

Bit	Field	Type	Reset	Description
7-4	LOW_THRESHOLD_CH0_LSB[3:0]	R/W	0b	Lower 4-bits of low threshold for analog input. These bits are compared with bits 3:0 of ADC conversion result.
3-0	EVENT_COUNT_CH0[3:0]	R/W	0b	Configuration for checking 'n+1' consecutive samples above threshold before setting event flag.

8.6.24 LOW_TH_CH0 Register (Address = 0x23) [reset = 0x0]

LOW_TH_CH0 is shown in Figure 60 and described in Table 35.

Return to the Summary Table.

Figure 60. LOW_TH_CH0 Register

7	6	5	4	3	2	1	0
LOW_THRESHOLD_CH0_MSB[7:0]							
R/W-0b							

Table 35. LOW_TH_CH0 Register Field Descriptions

Bit	Field	Type	Reset	Description
7-0	LOW_THRESHOLD_CH0_MSB[7:0]	R/W	0b	MSB aligned high threshold for analog input. These bits are compared with top 8 bits of ADC conversion result.

8.6.25 HYSTERESIS_CH1 Register (Address = 0x24) [reset = 0xF0]

HYSTERESIS_CH1 is shown in Figure 61 and described in Table 36.

Return to the Summary Table.

Figure 61. HYSTERESIS_CH1 Register

7	6	5	4	3	2	1	0
HIGH_THRESHOLD_CH1_LSB[3:0]				HYSTERESIS_CH1[3:0]			
R/W-1111b				R/W-0b			

Table 36. HYSTERESIS_CH1 Register Field Descriptions

Bit	Field	Type	Reset	Description
7-4	HIGH_THRESHOLD_CH1_LSB[3:0]	R/W	1111b	Lower 4-bits of high threshold for analog input. These bits are compared with bits 3:0 of ADC conversion result.
3-0	HYSTERESIS_CH1[3:0]	R/W	0b	4-bit hysteresis for high and low thresholds. This 4-bit hysteris is left shifted 3 times and applied on the lower 7-bits of the threshold. Total hysteresis = 7-bits [4-bits, 000b]

8.6.26 HIGH_TH_CH1 Register (Address = 0x25) [reset = 0xFF]

HIGH_TH_CH1 is shown in Figure 62 and described in Table 37.

Return to the Summary Table.

Figure 62. HIGH_TH_CH1 Register

7	6	5	4	3	2	1	0
HIGH_THRESHOLD_CH1_MSB[7:0]							
R/W-11111111b							

Table 37. HIGH_TH_CH1 Register Field Descriptions

Bit	Field	Type	Reset	Description
7-0	HIGH_THRESHOLD_CH1_MSB[7:0]	R/W	11111111b	MSB aligned high threshold for analog input. These bits are compared with top 8 bits of ADC conversion result.

8.6.27 EVENT_COUNT_CH1 Register (Address = 0x26) [reset = 0x0]

EVENT_COUNT_CH1 is shown in Figure 63 and described in Table 38.

Return to the Summary Table.

Figure 63. EVENT_COUNT_CH1 Register

7	6	5	4	3	2	1	0
LOW_THRESHOLD_CH1_LSB[3:0]				EVENT_COUNT_CH1[3:0]			
R/W-0b				R/W-0b			

Table 38. EVENT_COUNT_CH1 Register Field Descriptions

Bit	Field	Type	Reset	Description
7-4	LOW_THRESHOLD_CH1_LSB[3:0]	R/W	0b	Lower 4-bits of low threshold for analog input. These bits are compared with bits 3:0 of ADC conversion result.
3-0	EVENT_COUNT_CH1[3:0]	R/W	0b	Configuration for checking 'n+1' consecutive samples above threshold before setting event flag.

8.6.28 LOW_TH_CH1 Register (Address = 0x27) [reset = 0x0]

LOW_TH_CH1 is shown in Figure 64 and described in Table 39.

Return to the Summary Table.

Figure 64. LOW_TH_CH1 Register

7	6	5	4	3	2	1	0
LOW_THRESHOLD_CH1_MSB[7:0]							
R/W-0b							

Copyright © 2019–2020, Texas Instruments Incorporated

Table 39. LOW_TH_CH1 Register Field Descriptions

Bit	Field	Type	Reset	Description
7-0	LOW_THRESHOLD_CH1_MSB[7:0]	R/W	0b	MSB aligned high threshold for analog input. These bits are compared with top 8 bits of ADC conversion result.

8.6.29 HYSTERESIS_CH2 Register (Address = 0x28) [reset = 0xF0]

HYSTERESIS_CH2 is shown in Figure 65 and described in Table 40.

Return to the Summary Table.

Figure 65. HYSTERESIS_CH2 Register

7	6	5	4	3	2	1	0
HIGH_THRESHOLD_CH2_LSB[3:0]				HYSTERESIS_CH2[3:0]			
R/W-1111b				R/W-0b			

Table 40. HYSTERESIS_CH2 Register Field Descriptions

Bit	Field	Type	Reset	Description
7-4	HIGH_THRESHOLD_CH2_LSB[3:0]	R/W	1111b	Lower 4-bits of high threshold for analog input. These bits are compared with bits 3:0 of ADC conversion result.
3-0	HYSTERESIS_CH2[3:0]	R/W	0b	4-bit hysteresis for high and low thresholds. This 4-bit hysteris is left shifted 3 times and applied on the lower 7-bits of the threshold. Total hysteresis = 7-bits [4-bits, 000b]

8.6.30 HIGH_TH_CH2 Register (Address = 0x29) [reset = 0xFF]

HIGH_TH_CH2 is shown in Figure 66 and described in Table 41.

Return to the Summary Table.

Figure 66. HIGH_TH_CH2 Register

7	6	5	4	3	2	1	0
HIGH_THRESHOLD_CH2_MSB[7:0]							
R/W-11111111b							

Table 41. HIGH_TH_CH2 Register Field Descriptions

Bit	Field	Type	Reset	Description
7-0	HIGH_THRESHOLD_CH2_MSB[7:0]	R/W	11111111b	MSB aligned high threshold for analog input. These bits are compared with top 8 bits of ADC conversion result.

8.6.31 EVENT_COUNT_CH2 Register (Address = 0x2A) [reset = 0x0]

EVENT_COUNT_CH2 is shown in Figure 67 and described in Table 42.

Return to the Summary Table.

Figure 67. EVENT_COUNT_CH2 Register

7	6	5	4	3	2	1	0
LOW_THRESHOLD_CH2_LSB[3:0]				EVENT_COUNT_CH2[3:0]			
R/W-0b				R/W-0b			

Table 42. EVENT_COUNT_CH2 Register Field Descriptions

Bit	Field	Type	Reset	Description
7-4	LOW_THRESHOLD_CH2_LSB[3:0]	R/W	0b	Lower 4-bits of low threshold for analog input. These bits are compared with bits 3:0 of ADC conversion result.

Copyright © 2019–2020, Texas Instruments Incorporated

Table 42. EVENT_COUNT_CH2 Register Field Descriptions (continued)

Bit	Field	Type	Reset	Description
3-0	EVENT_COUNT_CH2[3:0]	R/W	0b	Configuration for checking 'n+1' consecutive samples above threshold before setting event flag.

8.6.32 LOW_TH_CH2 Register (Address = 0x2B) [reset = 0x0]

LOW_TH_CH2 is shown in Figure 68 and described in Table 43.

Return to the Summary Table.

Figure 68. LOW_TH_CH2 Register

7	6	5	4	3	2	1	0
LOW_THRESHOLD_CH2_MSB[7:0]							
R/W-0b							

Table 43. LOW_TH_CH2 Register Field Descriptions

Bit	Field	Type	Reset	Description
7-0	LOW_THRESHOLD_CH2_MSB[7:0]	R/W	0b	MSB aligned high threshold for analog input. These bits are compared with top 8 bits of ADC conversion result.

8.6.33 HYSTERESIS_CH3 Register (Address = 0x2C) [reset = 0xF0]

HYSTERESIS_CH3 is shown in Figure 69 and described in Table 44.

Return to the Summary Table.

Figure 69. HYSTERESIS_CH3 Register

7	6	5	4	3	2	1	0
HIGH_THRESHOLD_CH3_LSB[3:0]				HYSTERESIS_CH3[3:0]			
R/W-1111b				R/W-0b			

Table 44. HYSTERESIS_CH3 Register Field Descriptions

Bit	Field	Type	Reset	Description
7-4	HIGH_THRESHOLD_CH3_LSB[3:0]	R/W	1111b	Lower 4-bits of high threshold for analog input. These bits are compared with bits 3:0 of ADC conversion result.
3-0	HYSTERESIS_CH3[3:0]	R/W	0b	4-bit hysteresis for high and low thresholds. This 4-bit hysteris is left shifted 3 times and applied on the lower 7-bits of the threshold. Total hysteresis = 7-bits [4-bits, 000b]

8.6.34 HIGH_TH_CH3 Register (Address = 0x2D) [reset = 0xFF]

HIGH_TH_CH3 is shown in Figure 70 and described in Table 45.

Return to the Summary Table.

Figure 70. HIGH_TH_CH3 Register

7	6	5	4	3	2	1	0
HIGH_THRESHOLD_CH3_MSB[7:0]							
R/W-11111111b							

Table 45. HIGH_TH_CH3 Register Field Descriptions

Bit	Field	Type	Reset	Description
7-0	HIGH_THRESHOLD_CH3_MSB[7:0]	R/W	11111111b	MSB aligned high threshold for analog input. These bits are compared with top 8 bits of ADC conversion result.

Copyright © 2019–2020, Texas Instruments Incorporated

8.6.35 EVENT_COUNT_CH3 Register (Address = 0x2E) [reset = 0x0]

EVENT_COUNT_CH3 is shown in Figure 71 and described in Table 46.

Return to the Summary Table.

Figure 71. EVENT_COUNT_CH3 Register

7	6	5	4	3	2	1	0
LOW_THRESHOLD_CH3_LSB[3:0]				EVENT_COUNT_CH3[3:0]			
R/W-0b				R/W-0b			

Table 46. EVENT_COUNT_CH3 Register Field Descriptions

Bit	Field	Type	Reset	Description
7-4	LOW_THRESHOLD_CH3_LSB[3:0]	R/W	0b	Lower 4-bits of low threshold for analog input. These bits are compared with bits 3:0 of ADC conversion result.
3-0	EVENT_COUNT_CH3[3:0]	R/W	0b	Configuration for checking 'n+1' consecutive samples above threshold before setting event flag.

8.6.36 LOW_TH_CH3 Register (Address = 0x2F) [reset = 0x0]

LOW_TH_CH3 is shown in Figure 72 and described in Table 47.

Return to the Summary Table.

Figure 72. LOW_TH_CH3 Register

7	6	5	4	3	2	1	0
LOW_THRESHOLD_CH3_MSB[7:0]							
R/W-0b							

Table 47. LOW_TH_CH3 Register Field Descriptions

Bit	Field	Type	Reset	Description
7-0	LOW_THRESHOLD_CH3_MSB[7:0]	R/W	0b	MSB aligned high threshold for analog input. These bits are compared with top 8 bits of ADC conversion result.

8.6.37 HYSTERESIS_CH4 Register (Address = 0x30) [reset = 0xF0]

HYSTERESIS_CH4 is shown in Figure 73 and described in Table 48.

Return to the Summary Table.

Figure 73. HYSTERESIS_CH4 Register

7	6	5	4	3	2	1	0
HIGH_THRESHOLD_CH4_LSB[3:0]				HYSTERESIS_CH4[3:0]			
R/W-1111b				R/W-0b			

Table 48. HYSTERESIS_CH4 Register Field Descriptions

Bit	Field	Type	Reset	Description
7-4	HIGH_THRESHOLD_CH4_LSB[3:0]	R/W	1111b	Lower 4-bits of high threshold for analog input. These bits are compared with bits 3:0 of ADC conversion result.
3-0	HYSTERESIS_CH4[3:0]	R/W	0b	4-bit hysteresis for high and low thresholds. This 4-bit hysteris is left shifted 3 times and applied on the lower 7-bits of the threshold. Total hysteresis = 7-bits [4-bits, 000b]

8.6.38 HIGH_TH_CH4 Register (Address = 0x31) [reset = 0xFF]

HIGH_TH_CH4 is shown in Figure 74 and described in Table 49.

Return to the Summary Table.

Figure 74. HIGH_TH_CH4 Register

7	6	5	4	3	2	1	0
HIGH_THRESHOLD_CH4_MSB[7:0]							
R/W-11111111b							

Table 49. HIGH_TH_CH4 Register Field Descriptions

Bit	Field	Type	Reset	Description
7-0	HIGH_THRESHOLD_CH4_MSB[7:0]	R/W	11111111b	MSB aligned high threshold for analog input. These bits are compared with top 8 bits of ADC conversion result.

8.6.39 EVENT_COUNT_CH4 Register (Address = 0x32) [reset = 0x0]

EVENT_COUNT_CH4 is shown in Figure 75 and described in Table 50.

Return to the Summary Table.

Figure 75. EVENT_COUNT_CH4 Register

7	6	5	4	3	2	1	0
LOW_THRESHOLD_CH4_LSB[3:0]				EVENT_COUNT_CH4[3:0]			
R/W-0b				R/W-0b			

Table 50. EVENT_COUNT_CH4 Register Field Descriptions

Bit	Field	Type	Reset	Description
7-4	LOW_THRESHOLD_CH4_LSB[3:0]	R/W	0b	Lower 4-bits of low threshold for analog input. These bits are compared with bits 3:0 of ADC conversion result.
3-0	EVENT_COUNT_CH4[3:0]	R/W	0b	Configuration for checking 'n+1' consecutive samples above threshold before setting event flag.

8.6.40 LOW_TH_CH4 Register (Address = 0x33) [reset = 0x0]

LOW_TH_CH4 is shown in Figure 76 and described in Table 51.

Return to the Summary Table.

Figure 76. LOW_TH_CH4 Register

7	6	5	4	3	2	1	0
LOW_THRESHOLD_CH4_MSB[7:0]							
R/W-0b							

Table 51. LOW_TH_CH4 Register Field Descriptions

Bit	Field	Type	Reset	Description
7-0	LOW_THRESHOLD_CH4_MSB[7:0]	R/W	0b	MSB aligned high threshold for analog input. These bits are compared with top 8 bits of ADC conversion result.

8.6.41 HYSTERESIS_CH5 Register (Address = 0x34) [reset = 0xF0]

HYSTERESIS_CH5 is shown in Figure 77 and described in Table 52.

Return to the Summary Table.

Figure 77. HYSTERESIS_CH5 Register

7	6	5	4	3	2	1	0
HIGH_THRESHOLD_CH5_LSB[3:0]				HYSTERESIS_CH5[3:0]			
R/W-1111b				R/W-0b			

Copyright © 2019–2020, Texas Instruments Incorporated

Table 52. HYSTERESIS_CH5 Register Field Descriptions

Bit	Field	Type	Reset	Description
7-4	HIGH_THRESHOLD_CH5_LSB[3:0]	R/W	1111b	Lower 4-bits of high threshold for analog input. These bits are compared with bits 3:0 of ADC conversion result.
3-0	HYSTERESIS_CH5[3:0]	R/W	0b	4-bit hysteresis for high and low thresholds. This 4-bit hysteris is left shifted 3 times and applied on the lower 7-bits of the threshold. Total hysteresis = 7-bits [4-bits, 000b]

8.6.42 HIGH_TH_CH5 Register (Address = 0x35) [reset = 0xFF]

HIGH_TH_CH5 is shown in Figure 78 and described in Table 53.

Return to the Summary Table.

Figure 78. HIGH_TH_CH5 Register

7	6	5	4	3	2	1	0
HIGH_THRESHOLD_CH5_MSB[7:0]							
R/W-11111111b							

Table 53. HIGH_TH_CH5 Register Field Descriptions

Bit	Field	Type	Reset	Description
7-0	HIGH_THRESHOLD_CH5_MSB[7:0]	R/W	11111111b	MSB aligned high threshold for analog input. These bits are compared with top 8 bits of ADC conversion result.

8.6.43 EVENT_COUNT_CH5 Register (Address = 0x36) [reset = 0x0]

EVENT_COUNT_CH5 is shown in Figure 79 and described in Table 54.

Return to the Summary Table.

Figure 79. EVENT_COUNT_CH5 Register

7	6	5	4	3	2	1	0
LOW_THRESHOLD_CH5_LSB[3:0]				EVENT_COUNT_CH5[3:0]			
R/W-0b				R/W-0b			

Table 54. EVENT_COUNT_CH5 Register Field Descriptions

Bit	Field	Type	Reset	Description
7-4	LOW_THRESHOLD_CH5_LSB[3:0]	R/W	0b	Lower 4-bits of low threshold for analog input. These bits are compared with bits 3:0 of ADC conversion result.
3-0	EVENT_COUNT_CH5[3:0]	R/W	0b	Configuration for checking 'n+1' consecutive samples above threshold before setting event flag.

8.6.44 LOW_TH_CH5 Register (Address = 0x37) [reset = 0x0]

LOW_TH_CH5 is shown in Figure 80 and described in Table 55.

Return to the Summary Table.

Figure 80. LOW_TH_CH5 Register

7	6	5	4	3	2	1	0
LOW_THRESHOLD_CH5_MSB[7:0]							
R/W-0b							

Table 55. LOW_TH_CH5 Register Field Descriptions

Bit	Field	Type	Reset	Description
7-0	LOW_THRESHOLD_CH5_MSB[7:0]	R/W	0b	MSB aligned high threshold for analog input. These bits are compared with top 8 bits of ADC conversion result.

8.6.45 HYSTERESIS_CH6 Register (Address = 0x38) [reset = 0xF0]

HYSTERESIS_CH6 is shown in Figure 81 and described in Table 56.

Return to the Summary Table.

Figure 81. HYSTERESIS_CH6 Register

7	6	5	4	3	2	1	0
HIGH_THRESHOLD_CH6_LSB[3:0]				HYSTERESIS_CH6[3:0]			
R/W-1111b				R/W-0b			

Table 56. HYSTERESIS_CH6 Register Field Descriptions

Bit	Field	Type	Reset	Description
7-4	HIGH_THRESHOLD_CH6_LSB[3:0]	R/W	1111b	Lower 4-bits of high threshold for analog input. These bits are compared with bits 3:0 of ADC conversion result.
3-0	HYSTERESIS_CH6[3:0]	R/W	0b	4-bit hysteresis for high and low thresholds. This 4-bit hysteris is left shifted 3 times and applied on the lower 7-bits of the threshold. Total hysteresis = 7-bits [4-bits, 000b]

8.6.46 HIGH_TH_CH6 Register (Address = 0x39) [reset = 0xFF]

HIGH_TH_CH6 is shown in Figure 82 and described in Table 57.

Return to the Summary Table.

Figure 82. HIGH_TH_CH6 Register

7	6	5	4	3	2	1	0
HIGH_THRESHOLD_CH6_MSB[7:0]							
R/W-11111111b							

Table 57. HIGH_TH_CH6 Register Field Descriptions

Bit	Field	Type	Reset	Description
7-0	HIGH_THRESHOLD_CH6_MSB[7:0]	R/W	11111111b	MSB aligned high threshold for analog input. These bits are compared with top 8 bits of ADC conversion result.

8.6.47 EVENT_COUNT_CH6 Register (Address = 0x3A) [reset = 0x0]

EVENT_COUNT_CH6 is shown in Figure 83 and described in Table 58.

Return to the Summary Table.

Figure 83. EVENT_COUNT_CH6 Register

7	6	5	4	3	2	1	0
LOW_THRESHOLD_CH6_LSB[3:0]				EVENT_COUNT_CH6[3:0]			
R/W-0b				R/W-0b			

Table 58. EVENT_COUNT_CH6 Register Field Descriptions

Bit	Field	Type	Reset	Description
7-4	LOW_THRESHOLD_CH6_LSB[3:0]	R/W	0b	Lower 4-bits of low threshold for analog input. These bits are compared with bits 3:0 of ADC conversion result.

Copyright © 2019–2020, Texas Instruments Incorporated

Table 58. EVENT_COUNT_CH6 Register Field Descriptions (continued)

Bit	Field	Type	Reset	Description
3-0	EVENT_COUNT_CH6[3:0]	R/W	0b	Configuration for checking 'n+1' consecutive samples above threshold before setting event flag.

8.6.48 LOW_TH_CH6 Register (Address = 0x3B) [reset = 0x0]

LOW_TH_CH6 is shown in Figure 84 and described in Table 59.

Return to the Summary Table.

Figure 84. LOW_TH_CH6 Register

7	6	5	4	3	2	1	0
LOW_THRESHOLD_CH6_MSB[7:0]							
R/W-0b							

Table 59. LOW_TH_CH6 Register Field Descriptions

Bit	Field	Type	Reset	Description
7-0	LOW_THRESHOLD_CH6_MSB[7:0]	R/W	0b	MSB aligned high threshold for analog input. These bits are compared with top 8 bits of ADC conversion result.

8.6.49 HYSTERESIS_CH7 Register (Address = 0x3C) [reset = 0xF0]

HYSTERESIS_CH7 is shown in Figure 85 and described in Table 60.

Return to the Summary Table.

Figure 85. HYSTERESIS_CH7 Register

7	6	5	4	3	2	1	0
HIGH_THRESHOLD_CH7_LSB[3:0]				HYSTERESIS_CH7[3:0]			
R/W-1111b				R/W-0b			

Table 60. HYSTERESIS_CH7 Register Field Descriptions

Bit	Field	Type	Reset	Description
7-4	HIGH_THRESHOLD_CH7_LSB[3:0]	R/W	1111b	Lower 4-bits of high threshold for analog input. These bits are compared with bits 3:0 of ADC conversion result.
3-0	HYSTERESIS_CH7[3:0]	R/W	0b	4-bit hysteresis for high and low thresholds. This 4-bit hysteris is left shifted 3 times and applied on the lower 7-bits of the threshold. Total hysteresis = 7-bits [4-bits, 000b]

8.6.50 HIGH_TH_CH7 Register (Address = 0x3D) [reset = 0xFF]

HIGH_TH_CH7 is shown in Figure 86 and described in Table 61.

Return to the Summary Table.

Figure 86. HIGH_TH_CH7 Register

7	6	5	4	3	2	1	0
HIGH_THRESHOLD_CH7_MSB[7:0]							
R/W-11111111b							

Table 61. HIGH_TH_CH7 Register Field Descriptions

Bit	Field	Type	Reset	Description
7-0	HIGH_THRESHOLD_CH7_MSB[7:0]	R/W	11111111b	MSB aligned high threshold for analog input. These bits are compared with top 8 bits of ADC conversion result.

Copyright © 2019–2020, Texas Instruments Incorporated

8.6.51 EVENT_COUNT_CH7 Register (Address = 0x3E) [reset = 0x0]

EVENT_COUNT_CH7 is shown in Figure 87 and described in Table 62.

Return to the Summary Table.

Figure 87. EVENT_COUNT_CH7 Register

7	6	5	4	3	2	1	0
LOW_THRESHOLD_CH7_LSB[3:0]				EVENT_COUNT_CH7[3:0]			
R/W-0b				R/W-0b			

Table 62. EVENT_COUNT_CH7 Register Field Descriptions

Bit	Field	Type	Reset	Description
7-4	LOW_THRESHOLD_CH7_LSB[3:0]	R/W	0b	Lower 4-bits of low threshold for analog input. These bits are compared with bits 3:0 of ADC conversion result.
3-0	EVENT_COUNT_CH7[3:0]	R/W	0b	Configuration for checking 'n+1' consecutive samples above threshold before setting event flag.

8.6.52 LOW_TH_CH7 Register (Address = 0x3F) [reset = 0x0]

LOW_TH_CH7 is shown in Figure 88 and described in Table 63.

Return to the Summary Table.

Figure 88. LOW_TH_CH7 Register

7	6	5	4	3	2	1	0
LOW_THRESHOLD_CH7_MSB[7:0]							
R/W-0b							

Table 63. LOW_TH_CH7 Register Field Descriptions

Bit	Field	Type	Reset	Description
7-0	LOW_THRESHOLD_CH7_MSB[7:0]	R/W	0b	MSB aligned high threshold for analog input. These bits are compared with top 8 bits of ADC conversion result.

8.6.53 MAX_CH0_LSB Register (Address = 0x60) [reset = 0x0]

MAX_CH0_LSB is shown in Figure 89 and described in Table 64.

Return to the Summary Table.

Figure 89. MAX_CH0_LSB Register

7	6	5	4	3	2	1	0
MAX_VALUE_CH0_LSB[7:0]							
R-0b							

Table 64. MAX_CH0_LSB Register Field Descriptions

Bit	Field	Type	Reset	Description
7-0	MAX_VALUE_CH0_LSB[7:0]	R	0b	Maximum code recorded on analog input channel from the last time this register was read. Reading the register resets the value to 0.

8.6.54 MAX_CH0_MSB Register (Address = 0x61) [reset = 0x0]

MAX_CH0_MSB is shown in Figure 90 and described in Table 65.

Return to the Summary Table.

Copyright © 2019–2020, Texas Instruments Incorporated

Figure 90. MAX_CH0_MSB Register

7	6	5	4	3	2	1	0
MAX_VALUE_CH0_MSB[7:0]							
R-0b							

Table 65. MAX_CH0_MSB Register Field Descriptions

Bit	Field	Type	Reset	Description
7-0	MAX_VALUE_CH0_MSB[7:0]	R	0b	Maximum code recorded on analog input channel from the last time this register was read. Reading the register resets the value to 0.

8.6.55 MAX_CH1_LSB Register (Address = 0x62) [reset = 0x0]

MAX_CH1_LSB is shown in Figure 91 and described in Table 66.

Return to the Summary Table.

Figure 91. MAX_CH1_LSB Register

7	6	5	4	3	2	1	0
MAX_VALUE_CH1_LSB[7:0]							
R-0b							

Table 66. MAX_CH1_LSB Register Field Descriptions

Bit	Field	Type	Reset	Description
7-0	MAX_VALUE_CH1_LSB[7:0]	R	0b	Maximum code recorded on analog input channel from the last time this register was read. Reading the register resets the value to 0.

8.6.56 MAX_CH1_MSB Register (Address = 0x63) [reset = 0x0]

MAX_CH1_MSB is shown in Figure 92 and described in Table 67.

Return to the Summary Table.

Figure 92. MAX_CH1_MSB Register

7	6	5	4	3	2	1	0
MAX_VALUE_CH1_MSB[7:0]							
R-0b							

Table 67. MAX_CH1_MSB Register Field Descriptions

Bit	Field	Type	Reset	Description
7-0	MAX_VALUE_CH1_MSB[7:0]	R	0b	Maximum code recorded on analog input channel from the last time this register was read. Reading the register resets the value to 0.

8.6.57 MAX_CH2_LSB Register (Address = 0x64) [reset = 0x0]

MAX_CH2_LSB is shown in Figure 93 and described in Table 68.

Return to the Summary Table.

Figure 93. MAX_CH2_LSB Register

7	6	5	4	3	2	1	0
MAX_VALUE_CH2_LSB[7:0]							
R-0b							

Table 68. MAX_CH2_LSB Register Field Descriptions

Bit	Field	Type	Reset	Description
7-0	MAX_VALUE_CH2_LSB[7:0]	R	0b	Maximum code recorded on analog input channel from the last time this register was read. Reading the register resets the value to 0.

8.6.58 MAX_CH2_MSB Register (Address = 0x65) [reset = 0x0]

MAX_CH2_MSB is shown in Figure 94 and described in Table 69.

Return to the Summary Table.

Figure 94. MAX_CH2_MSB Register

7	6	5	4	3	2	1	0
MAX_VALUE_CH2_MSB[7:0]							
R-0b							

Table 69. MAX_CH2_MSB Register Field Descriptions

Bit	Field	Type	Reset	Description
7-0	MAX_VALUE_CH2_MSB[7:0]	R	0b	Maximum code recorded on analog input channel from the last time this register was read. Reading the register resets the value to 0.

8.6.59 MAX_CH3_LSB Register (Address = 0x66) [reset = 0x0]

MAX_CH3_LSB is shown in Figure 95 and described in Table 70.

Return to the Summary Table.

Figure 95. MAX_CH3_LSB Register

7	6	5	4	3	2	1	0
MAX_VALUE_CH3_LSB[7:0]							
R-0b							

Table 70. MAX_CH3_LSB Register Field Descriptions

Bit	Field	Type	Reset	Description
7-0	MAX_VALUE_CH3_LSB[7:0]	R	0b	Maximum code recorded on analog input channel from the last time this register was read. Reading the register resets the value to 0.

8.6.60 MAX_CH3_MSB Register (Address = 0x67) [reset = 0x0]

MAX_CH3_MSB is shown in Figure 96 and described in Table 71.

Return to the Summary Table.

Figure 96. MAX_CH3_MSB Register

7	6	5	4	3	2	1	0
MAX_VALUE_CH3_MSB[7:0]							
R-0b							

Table 71. MAX_CH3_MSB Register Field Descriptions

Bit	Field	Type	Reset	Description
7-0	MAX_VALUE_CH3_MSB[7:0]	R	0b	Maximum code recorded on analog input channel from the last time this register was read. Reading the register resets the value to 0.

Copyright © 2019–2020, Texas Instruments Incorporated

8.6.61 MAX_CH4_LSB Register (Address = 0x68) [reset = 0x0]

MAX_CH4_LSB is shown in Figure 97 and described in Table 72.

Return to the Summary Table.

Figure 97. MAX_CH4_LSB Register

7	6	5	4	3	2	1	0
MAX_VALUE_CH4_LSB[7:0]							
R-0b							

Table 72. MAX_CH4_LSB Register Field Descriptions

Bit	Field	Type	Reset	Description
7-0	MAX_VALUE_CH4_LSB[7:0]	R	0b	Maximum code recorded on analog input channel from the last time this register was read. Reading the register resets the value to 0.

8.6.62 MAX_CH4_MSB Register (Address = 0x69) [reset = 0x0]

MAX_CH4_MSB is shown in Figure 98 and described in Table 73.

Return to the Summary Table.

Figure 98. MAX_CH4_MSB Register

7	6	5	4	3	2	1	0
MAX_VALUE_CH4_MSB[7:0]							
R-0b							

Table 73. MAX_CH4_MSB Register Field Descriptions

Bit	Field	Type	Reset	Description
7-0	MAX_VALUE_CH4_MSB[7:0]	R	0b	Maximum code recorded on analog input channel from the last time this register was read. Reading the register resets the value to 0.

8.6.63 MAX_CH5_LSB Register (Address = 0x6A) [reset = 0x0]

MAX_CH5_LSB is shown in Figure 99 and described in Table 74.

Return to the Summary Table.

Figure 99. MAX_CH5_LSB Register

7	6	5	4	3	2	1	0
MAX_VALUE_CH5_LSB[7:0]							
R-0b							

Table 74. MAX_CH5_LSB Register Field Descriptions

Bit	Field	Type	Reset	Description
7-0	MAX_VALUE_CH5_LSB[7:0]	R	0b	Maximum code recorded on analog input channel from the last time this register was read. Reading the register resets the value to 0.

8.6.64 MAX_CH5_MSB Register (Address = 0x6B) [reset = 0x0]

MAX_CH5_MSB is shown in Figure 100 and described in Table 75.

Return to the Summary Table.

Figure 100. MAX_CH5_MSB Register

7	6	5	4	3	2	1	0
MAX_VALUE_CH5_MSB[7:0]							
R-0b							

Table 75. MAX_CH5_MSB Register Field Descriptions

Bit	Field	Type	Reset	Description
7-0	MAX_VALUE_CH5_MSB[7:0]	R	0b	Maximum code recorded on analog input channel from the last time this register was read. Reading the register resets the value to 0.

8.6.65 MAX_CH6_LSB Register (Address = 0x6C) [reset = 0x0]

MAX_CH6_LSB is shown in Figure 101 and described in Table 76.

Return to the Summary Table.

Figure 101. MAX_CH6_LSB Register

7	6	5	4	3	2	1	0
MAX_VALUE_CH6_LSB[7:0]							
R-0b							

Table 76. MAX_CH6_LSB Register Field Descriptions

Bit	Field	Type	Reset	Description
7-0	MAX_VALUE_CH6_LSB[7:0]	R	0b	Maximum code recorded on analog input channel from the last time this register was read. Reading the register resets the value to 0.

8.6.66 MAX_CH6_MSB Register (Address = 0x6D) [reset = 0x0]

MAX_CH6_MSB is shown in Figure 102 and described in Table 77.

Return to the Summary Table.

Figure 102. MAX_CH6_MSB Register

7	6	5	4	3	2	1	0
MAX_VALUE_CH6_MSB[7:0]							
R-0b							

Table 77. MAX_CH6_MSB Register Field Descriptions

Bit	Field	Type	Reset	Description
7-0	MAX_VALUE_CH6_MSB[7:0]	R	0b	Maximum code recorded on analog input channel from the last time this register was read. Reading the register resets the value to 0.

8.6.67 MAX_CH7_LSB Register (Address = 0x6E) [reset = 0x0]

MAX_CH7_LSB is shown in Figure 103 and described in Table 78.

Return to the Summary Table.

Figure 103. MAX_CH7_LSB Register

7	6	5	4	3	2	1	0
MAX_VALUE_CH7_LSB[7:0]							
R-0b							

Copyright © 2019–2020, Texas Instruments Incorporated

Table 78. MAX_CH7_LSB Register Field Descriptions

Bit	Field	Type	Reset	Description
7-0	MAX_VALUE_CH7_LSB[7:0]	R	0b	Maximum code recorded on analog input channel from the last time this register was read. Reading the register resets the value to 0.

8.6.68 MAX_CH7_MSB Register (Address = 0x6F) [reset = 0x0]

MAX_CH7_MSB is shown in Figure 104 and described in Table 79.

Return to the Summary Table.

Figure 104. MAX_CH7_MSB Register

7	6	5	4	3	2	1	0
MAX_VALUE_CH7_MSB[7:0]							
R-0b							

Table 79. MAX_CH7_MSB Register Field Descriptions

Bit	Field	Type	Reset	Description
7-0	MAX_VALUE_CH7_MSB[7:0]	R	0b	Maximum code recorded on analog input channel from the last time this register was read. Reading the register resets the value to 0.

8.6.69 MIN_CH0_LSB Register (Address = 0x80) [reset = 0xFF]

MIN_CH0_LSB is shown in Figure 105 and described in Table 80.

Return to the Summary Table.

Figure 105. MIN_CH0_LSB Register

7	6	5	4	3	2	1	0
MIN_VALUE_CH0_LSB[7:0]							
R-11111111b							

Table 80. MIN_CH0_LSB Register Field Descriptions

Bit	Field	Type	Reset	Description
7-0	MIN_VALUE_CH0_LSB[7:0]	R	11111111b	Minimum code recorded on the analog input channel from the last time this register was read. Reading the register resets the value to 0xFF.

8.6.70 MIN_CH0_MSB Register (Address = 0x81) [reset = 0xFF]

MIN_CH0_MSB is shown in Figure 106 and described in Table 81.

Return to the Summary Table.

Figure 106. MIN_CH0_MSB Register

7	6	5	4	3	2	1	0
MIN_VALUE_CH0_MSB[7:0]							
R-11111111b							

Table 81. MIN_CH0_MSB Register Field Descriptions

Bit	Field	Type	Reset	Description
7-0	MIN_VALUE_CH0_MSB[7:0]	R	11111111b	Minimum code recorded on the analog input channel from the last time this register was read. Reading the register resets the value to 0xFF.

Copyright © 2019–2020, Texas Instruments Incorporated

8.6.71 MIN_CH1_LSB Register (Address = 0x82) [reset = 0xFF]

MIN_CH1_LSB is shown in Figure 107 and described in Table 82.

Return to the Summary Table.

Figure 107. MIN_CH1_LSB Register

7	6	5	4	3	2	1	0
MIN_VALUE_CH1_LSB[7:0]							
R-11111111b							

Table 82. MIN_CH1_LSB Register Field Descriptions

Bit	Field	Type	Reset	Description
7-0	MIN_VALUE_CH1_LSB[7:0]	R	11111111b	Minimum code recorded on the analog input channel from the last time this register was read. Reading the register resets the value to 0xFF.

8.6.72 MIN_CH1_MSB Register (Address = 0x83) [reset = 0xFF]

MIN_CH1_MSB is shown in Figure 108 and described in Table 83.

Return to the Summary Table.

Figure 108. MIN_CH1_MSB Register

7	6	5	4	3	2	1	0
MIN_VALUE_CH1_MSB[7:0]							
R-11111111b							

Table 83. MIN_CH1_MSB Register Field Descriptions

Bit	Field	Type	Reset	Description
7-0	MIN_VALUE_CH1_MSB[7:0]	R	11111111b	Minimum code recorded on the analog input channel from the last time this register was read. Reading the register resets the value to 0xFF.

8.6.73 MIN_CH2_LSB Register (Address = 0x84) [reset = 0xFF]

MIN_CH2_LSB is shown in Figure 109 and described in Table 84.

Return to the Summary Table.

Figure 109. MIN_CH2_LSB Register

7	6	5	4	3	2	1	0
MIN_VALUE_CH2_LSB[7:0]							
R-11111111b							

Table 84. MIN_CH2_LSB Register Field Descriptions

Bit	Field	Type	Reset	Description
7-0	MIN_VALUE_CH2_LSB[7:0]	R	11111111b	Minimum code recorded on the analog input channel from the last time this register was read. Reading the register resets the value to 0xFF.

8.6.74 MIN_CH2_MSB Register (Address = 0x85) [reset = 0xFF]

MIN_CH2_MSB is shown in Figure 110 and described in Table 85.

Return to the Summary Table.

Copyright © 2019–2020, Texas Instruments Incorporated

Figure 110. MIN_CH2_MSB Register

7	6	5	4	3	2	1	0
MIN_VALUE_CH2_MSB[7:0]							
R-11111111b							

Table 85. MIN_CH2_MSB Register Field Descriptions

Bit	Field	Type	Reset	Description
7-0	MIN_VALUE_CH2_MSB[7:0]	R	11111111b	Minimum code recorded on the analog input channel from the last time this register was read. Reading the register resets the value to 0xFF.

8.6.75 MIN_CH3_LSB Register (Address = 0x86) [reset = 0xFF]

MIN_CH3_LSB is shown in Figure 111 and described in Table 86.

Return to the Summary Table.

Figure 111. MIN_CH3_LSB Register

7	6	5	4	3	2	1	0
MIN_VALUE_CH3_LSB[7:0]							
R-11111111b							

Table 86. MIN_CH3_LSB Register Field Descriptions

Bit	Field	Type	Reset	Description
7-0	MIN_VALUE_CH3_LSB[7:0]	R	11111111b	Minimum code recorded on the analog input channel from the last time this register was read. Reading the register resets the value to 0xFF.

8.6.76 MIN_CH3_MSB Register (Address = 0x87) [reset = 0xFF]

MIN_CH3_MSB is shown in Figure 112 and described in Table 87.

Return to the Summary Table.

Figure 112. MIN_CH3_MSB Register

7	6	5	4	3	2	1	0
MIN_VALUE_CH3_MSB[7:0]							
R-11111111b							

Table 87. MIN_CH3_MSB Register Field Descriptions

Bit	Field	Type	Reset	Description
7-0	MIN_VALUE_CH3_MSB[7:0]	R	11111111b	Minimum code recorded on the analog input channel from the last time this register was read. Reading the register resets the value to 0xFF.

8.6.77 MIN_CH4_LSB Register (Address = 0x88) [reset = 0xFF]

MIN_CH4_LSB is shown in Figure 113 and described in Table 88.

Return to the Summary Table.

Figure 113. MIN_CH4_LSB Register

7	6	5	4	3	2	1	0
MIN_VALUE_CH4_LSB[7:0]							
R-11111111b							

Table 88. MIN_CH4_LSB Register Field Descriptions

Bit	Field	Type	Reset	Description
7-0	MIN_VALUE_CH4_LSB[7:0]	R	11111111b	Minimum code recorded on the analog input channel from the last time this register was read. Reading the register resets the value to 0xFF.

8.6.78 MIN_CH4_MSB Register (Address = 0x89) [reset = 0xFF]

MIN_CH4_MSB is shown in Figure 114 and described in Table 89.

Return to the Summary Table.

Figure 114. MIN_CH4_MSB Register

7	6	5	4	3	2	1	0
MIN_VALUE_CH4_MSB[7:0]							
R-11111111b							

Table 89. MIN_CH4_MSB Register Field Descriptions

Bit	Field	Type	Reset	Description
7-0	MIN_VALUE_CH4_MSB[7:0]	R	11111111b	Minimum code recorded on the analog input channel from the last time this register was read. Reading the register resets the value to 0xFF.

8.6.79 MIN_CH5_LSB Register (Address = 0x8A) [reset = 0xFF]

MIN_CH5_LSB is shown in Figure 115 and described in Table 90.

Return to the Summary Table.

Figure 115. MIN_CH5_LSB Register

7	6	5	4	3	2	1	0
MIN_VALUE_CH5_LSB[7:0]							
R-11111111b							

Table 90. MIN_CH5_LSB Register Field Descriptions

Bit	Field	Type	Reset	Description
7-0	MIN_VALUE_CH5_LSB[7:0]	R	11111111b	Minimum code recorded on the analog input channel from the last time this register was read. Reading the register resets the value to 0xFF.

8.6.80 MIN_CH5_MSB Register (Address = 0x8B) [reset = 0xFF]

MIN_CH5_MSB is shown in Figure 116 and described in Table 91.

Return to the Summary Table.

Figure 116. MIN_CH5_MSB Register

7	6	5	4	3	2	1	0
MIN_VALUE_CH5_MSB[7:0]							
R-11111111b							

Table 91. MIN_CH5_MSB Register Field Descriptions

Bit	Field	Type	Reset	Description
7-0	MIN_VALUE_CH5_MSB[7:0]	R	11111111b	Minimum code recorded on the analog input channel from the last time this register was read. Reading the register resets the value to 0xFF.

Copyright © 2019–2020, Texas Instruments Incorporated

8.6.81 MIN_CH6_LSB Register (Address = 0x8C) [reset = 0xFF]

MIN_CH6_LSB is shown in Figure 117 and described in Table 92.

Return to the Summary Table.

Figure 117. MIN_CH6_LSB Register

7	6	5	4	3	2	1	0
MIN_VALUE_CH6_LSB[7:0]							
R-11111111b							

Table 92. MIN_CH6_LSB Register Field Descriptions

Bit	Field	Type	Reset	Description
7-0	MIN_VALUE_CH6_LSB[7:0]	R	11111111b	Minimum code recorded on the analog input channel from the last time this register was read. Reading the register resets the value to 0xFF.

8.6.82 MIN_CH6_MSB Register (Address = 0x8D) [reset = 0xFF]

MIN_CH6_MSB is shown in Figure 118 and described in Table 93.

Return to the Summary Table.

Figure 118. MIN_CH6_MSB Register

7	6	5	4	3	2	1	0
MIN_VALUE_CH6_MSB[7:0]							
R-11111111b							

Table 93. MIN_CH6_MSB Register Field Descriptions

Bit	Field	Type	Reset	Description
7-0	MIN_VALUE_CH6_MSB[7:0]	R	11111111b	Minimum code recorded on the analog input channel from the last time this register was read. Reading the register resets the value to 0xFF.

8.6.83 MIN_CH7_LSB Register (Address = 0x8E) [reset = 0xFF]

MIN_CH7_LSB is shown in Figure 119 and described in Table 94.

Return to the Summary Table.

Figure 119. MIN_CH7_LSB Register

7	6	5	4	3	2	1	0
MIN_VALUE_CH7_LSB[7:0]							
R-11111111b							

Table 94. MIN_CH7_LSB Register Field Descriptions

Bit	Field	Type	Reset	Description
7-0	MIN_VALUE_CH7_LSB[7:0]	R	11111111b	Minimum code recorded on the analog input channel from the last time this register was read. Reading the register resets the value to 0xFF.

8.6.84 MIN_CH7_MSB Register (Address = 0x8F) [reset = 0xFF]

MIN_CH7_MSB is shown in Figure 120 and described in Table 95.

Return to the Summary Table.

Figure 120. MIN_CH7_MSB Register

7	6	5	4	3	2	1	0
MIN_VALUE_CH7_MSB[7:0]							
R-11111111b							

Table 95. MIN_CH7_MSB Register Field Descriptions

Bit	Field	Type	Reset	Description
7-0	MIN_VALUE_CH7_MSB[7:0]	R	11111111b	Minimum code recorded on the analog input channel from the last time this register was read. Reading the register resets the value to 0xFF.

8.6.85 RECENT_CH0_LSB Register (Address = 0xA0) [reset = 0x0]

RECENT_CH0_LSB is shown in Figure 121 and described in Table 96.

Return to the Summary Table.

Figure 121. RECENT_CH0_LSB Register

7	6	5	4	3	2	1	0
LAST_VALUE_CH0_LSB[7:0]							
R-0b							

Table 96. RECENT_CH0_LSB Register Field Descriptions

Bit	Field	Type	Reset	Description
7-0	LAST_VALUE_CH0_LSB[7:0]	R	0b	Next 8 bits of the last result for this analog input channel.

8.6.86 RECENT_CH0_MSB Register (Address = 0xA1) [reset = 0x0]

RECENT_CH0_MSB is shown in Figure 122 and described in Table 97.

Return to the Summary Table.

Figure 122. RECENT_CH0_MSB Register

7	6	5	4	3	2	1	0
LAST_VALUE_CH0_MSB[7:0]							
R-0b							

Table 97. RECENT_CH0_MSB Register Field Descriptions

Bit	Field	Type	Reset	Description
7-0	LAST_VALUE_CH0_MSB[7:0]	R	0b	MSB aligned first 8 bits of the last result for this analog input channel.

8.6.87 RECENT_CH1_LSB Register (Address = 0xA2) [reset = 0x0]

RECENT_CH1_LSB is shown in Figure 123 and described in Table 98.

Return to the Summary Table.

Figure 123. RECENT_CH1_LSB Register

7	6	5	4	3	2	1	0
LAST_VALUE_CH1_LSB[7:0]							
R-0b							

Copyright © 2019–2020, Texas Instruments Incorporated

Table 98. RECENT_CH1_LSB Register Field Descriptions

Bit	Field	Type	Reset	Description
7-0	LAST_VALUE_CH1_LSB[7:0]	R	0b	Next 8 bits of the last result for this analog input channel.

8.6.88 RECENT_CH1_MSB Register (Address = 0xA3) [reset = 0x0]

RECENT_CH1_MSB is shown in Figure 124 and described in Table 99.

Return to the Summary Table.

Figure 124. RECENT_CH1_MSB Register

7	6	5	4	3	2	1	0
LAST_VALUE_CH1_MSB[7:0]							
R-0b							

Table 99. RECENT_CH1_MSB Register Field Descriptions

Bit	Field	Type	Reset	Description
7-0	LAST_VALUE_CH1_MSB[7:0]	R	0b	MSB aligned first 8 bits of the last result for this analog input channel.

8.6.89 RECENT_CH2_LSB Register (Address = 0xA4) [reset = 0x0]

RECENT_CH2_LSB is shown in Figure 125 and described in Table 100.

Return to the Summary Table.

Figure 125. RECENT_CH2_LSB Register

7	6	5	4	3	2	1	0
LAST_VALUE_CH2_LSB[7:0]							
R-0b							

Table 100. RECENT_CH2_LSB Register Field Descriptions

Bit	Field	Type	Reset	Description
7-0	LAST_VALUE_CH2_LSB[7:0]	R	0b	Next 8 bits of the last result for this analog input channel.

8.6.90 RECENT_CH2_MSB Register (Address = 0xA5) [reset = 0x0]

RECENT_CH2_MSB is shown in Figure 126 and described in Table 101.

Return to the Summary Table.

Figure 126. RECENT_CH2_MSB Register

7	6	5	4	3	2	1	0
LAST_VALUE_CH2_MSB[7:0]							
R-0b							

Table 101. RECENT_CH2_MSB Register Field Descriptions

Bit	Field	Type	Reset	Description
7-0	LAST_VALUE_CH2_MSB[7:0]	R	0b	MSB aligned first 8 bits of the last result for this analog input channel.

Copyright © 2019–2020, Texas Instruments Incorporated

8.6.91 RECENT_CH3_LSB Register (Address = 0xA6) [reset = 0x0]

RECENT_CH3_LSB is shown in Figure 127 and described in Table 102.

Return to the Summary Table.

Figure 127. RECENT_CH3_LSB Register

7	6	5	4	3	2	1	0
LAST_VALUE_CH3_LSB[7:0]							
R-0b							

Table 102. RECENT_CH3_LSB Register Field Descriptions

Bit	Field	Type	Reset	Description
7-0	LAST_VALUE_CH3_LSB[7:0]	R	0b	Next 8 bits of the last result for this analog input channel.

8.6.92 RECENT_CH3_MSB Register (Address = 0xA7) [reset = 0x0]

RECENT_CH3_MSB is shown in Figure 128 and described in Table 103.

Return to the Summary Table.

Figure 128. RECENT_CH3_MSB Register

7	6	5	4	3	2	1	0
LAST_VALUE_CH3_MSB[7:0]							
R-0b							

Table 103. RECENT_CH3_MSB Register Field Descriptions

Bit	Field	Type	Reset	Description
7-0	LAST_VALUE_CH3_MSB[7:0]	R	0b	MSB aligned first 8 bits of the last result for this analog input channel.

8.6.93 RECENT_CH4_LSB Register (Address = 0xA8) [reset = 0x0]

RECENT_CH4_LSB is shown in Figure 129 and described in Table 104.

Return to the Summary Table.

Figure 129. RECENT_CH4_LSB Register

7	6	5	4	3	2	1	0
LAST_VALUE_CH4_LSB[7:0]							
R-0b							

Table 104. RECENT_CH4_LSB Register Field Descriptions

Bit	Field	Type	Reset	Description
7-0	LAST_VALUE_CH4_LSB[7:0]	R	0b	Next 8 bits of the last result for this analog input channel.

8.6.94 RECENT_CH4_MSB Register (Address = 0xA9) [reset = 0x0]

RECENT_CH4_MSB is shown in Figure 130 and described in Table 105.

Return to the Summary Table.

Copyright © 2019–2020, Texas Instruments Incorporated

Figure 130. RECENT_CH4_MSB Register

7	6	5	4	3	2	1	0
LAST_VALUE_CH4_MSB[7:0]							
R-0b							

Table 105. RECENT_CH4_MSB Register Field Descriptions

Bit	Field	Type	Reset	Description
7-0	LAST_VALUE_CH4_MSB [7:0]	R	0b	MSB aligned first 8 bits of the last result for this analog input channel.

8.6.95 RECENT_CH5_LSB Register (Address = 0xAA) [reset = 0x0]

RECENT_CH5_LSB is shown in Figure 131 and described in Table 106.

Return to the Summary Table.

Figure 131. RECENT_CH5_LSB Register

7	6	5	4	3	2	1	0
LAST_VALUE_CH5_LSB[7:0]							
R-0b							

Table 106. RECENT_CH5_LSB Register Field Descriptions

Bit	Field	Type	Reset	Description
7-0	LAST_VALUE_CH5_LSB[7:0]	R	0b	Next 8 bits of the last result for this analog input channel.

8.6.96 RECENT_CH5_MSB Register (Address = 0xAB) [reset = 0x0]

RECENT_CH5_MSB is shown in Figure 132 and described in Table 107.

Return to the Summary Table.

Figure 132. RECENT_CH5_MSB Register

7	6	5	4	3	2	1	0
LAST_VALUE_CH5_MSB[7:0]							
R-0b							

Table 107. RECENT_CH5_MSB Register Field Descriptions

Bit	Field	Type	Reset	Description
7-0	LAST_VALUE_CH5_MSB [7:0]	R	0b	MSB aligned first 8 bits of the last result for this analog input channel.

8.6.97 RECENT_CH6_LSB Register (Address = 0xAC) [reset = 0x0]

RECENT_CH6_LSB is shown in Figure 133 and described in Table 108.

Return to the Summary Table.

Figure 133. RECENT_CH6_LSB Register

7	6	5	4	3	2	1	0
LAST_VALUE_CH6_LSB[7:0]							
R-0b							

Table 108. RECENT_CH6_LSB Register Field Descriptions

Bit	Field	Type	Reset	Description
7-0	LAST_VALUE_CH6_LSB[7:0]	R	0b	Next 8 bits of the last result for this analog input channel.

8.6.98 RECENT_CH6_MSB Register (Address = 0xAD) [reset = 0x0]

RECENT_CH6_MSB is shown in Figure 134 and described in Table 109.

Return to the Summary Table.

Figure 134. RECENT_CH6_MSB Register

7	6	5	4	3	2	1	0
LAST_VALUE_CH6_MSB[7:0]							
R-0b							

Table 109. RECENT_CH6_MSB Register Field Descriptions

Bit	Field	Type	Reset	Description
7-0	LAST_VALUE_CH6_MSB[7:0]	R	0b	MSB aligned first 8 bits of the last result for this analog input channel.

8.6.99 RECENT_CH7_LSB Register (Address = 0xAE) [reset = 0x0]

RECENT_CH7_LSB is shown in Figure 135 and described in Table 110.

Return to the Summary Table.

Figure 135. RECENT_CH7_LSB Register

7	6	5	4	3	2	1	0
LAST_VALUE_CH7_LSB[7:0]							
R-0b							

Table 110. RECENT_CH7_LSB Register Field Descriptions

Bit	Field	Type	Reset	Description
7-0	LAST_VALUE_CH7_LSB[7:0]	R	0b	Next 8 bits of the last result for this analog input channel.

8.6.100 RECENT_CH7_MSB Register (Address = 0xAF) [reset = 0x0]

RECENT_CH7_MSB is shown in Figure 136 and described in Table 111.

Return to the Summary Table.

Figure 136. RECENT_CH7_MSB Register

7	6	5	4	3	2	1	0
LAST_VALUE_CH7_MSB[7:0]							
R-0b							

Table 111. RECENT_CH7_MSB Register Field Descriptions

Bit	Field	Type	Reset	Description
7-0	LAST_VALUE_CH7_MSB[7:0]	R	0b	MSB aligned first 8 bits of the last result for this analog input channel.

Copyright © 2019–2020, Texas Instruments Incorporated

8.6.101 GPO0_TRIG_EVENT_SEL Register (Address = 0xC3) [reset = 0x2]

GPO0_TRIG_EVENT_SEL is shown in Figure 137 and described in Table 112.

Return to the Summary Table.

Figure 137. GPO0_TRIG_EVENT_SEL Register

7	6	5	4	3	2	1	0
GPO0_TRIG_EVENT_SEL[7:0]							
R/W-10b							

Table 112. GPO0_TRIG_EVENT_SEL Register Field Descriptions

Bit	Field	Type	Reset	Description
7-0	GPO0_TRIG_EVENT_SEL[7:0]	R/W	10b	Select the inputs AIN/GPIO[7:0], analog or digital, which can trigger an event based update on GPO0. 0b = Alert flags for the AIN/GPIO corresponding to this bit do not trigger GPO0 output. 1b = Alert flags for the AIN/GPIO corresponding to this bit trigger GPO0 output.

8.6.102 GPO1_TRIG_EVENT_SEL Register (Address = 0xC5) [reset = 0x2]

GPO1_TRIG_EVENT_SEL is shown in Figure 138 and described in Table 113.

Return to the Summary Table.

Figure 138. GPO1_TRIG_EVENT_SEL Register

7	6	5	4	3	2	1	0
GPO1_TRIG_EVENT_SEL[7:0]							
R/W-10b							

Table 113. GPO1_TRIG_EVENT_SEL Register Field Descriptions

Bit	Field	Type	Reset	Description
7-0	GPO1_TRIG_EVENT_SEL[7:0]	R/W	10b	Select the inputs AIN/GPIO[7:0], analog or digital, which can trigger an event based update on GPO1. 0b = Alert flags for the AIN/GPIO corresponding to this bit do not trigger GPO1 output. 1b = Alert flags for the AIN/GPIO corresponding to this bit trigger GPO1 output.

8.6.103 GPO2_TRIG_EVENT_SEL Register (Address = 0xC7) [reset = 0x2]

GPO2_TRIG_EVENT_SEL is shown in Figure 139 and described in Table 114.

Return to the Summary Table.

Figure 139. GPO2_TRIG_EVENT_SEL Register

7	6	5	4	3	2	1	0
GPO2_TRIG_EVENT_SEL[7:0]							
R/W-10b							

Table 114. GPO2_TRIG_EVENT_SEL Register Field Descriptions

Bit	Field	Type	Reset	Description
7-0	GPO2_TRIG_EVENT_SEL[7:0]	R/W	10b	Select the inputs AIN/GPIO[7:0], analog or digital, which can trigger an event based update on GPO2. 0b = Alert flags for the AIN/GPIO corresponding to this bit do not trigger GPO2 output. 1b = Alert flags for the AIN/GPIO corresponding to this bit trigger GPO2 output.

8.6.104 GPO3_TRIG_EVENT_SEL Register (Address = 0xC9) [reset = 0x2]

GPO3_TRIG_EVENT_SEL is shown in Figure 140 and described in Table 115.

Return to the Summary Table.

Figure 140. GPO3_TRIG_EVENT_SEL Register

7	6	5	4	3	2	1	0
GPO3_TRIG_EVENT_SEL[7:0]							
R/W-10b							

Table 115. GPO3_TRIG_EVENT_SEL Register Field Descriptions

Bit	Field	Type	Reset	Description
7-0	GPO3_TRIG_EVENT_SEL[7:0]	R/W	10b	Select the inputs AIN/GPIO[7:0], analog or digital, which can trigger an event based update on GPO3. 0b = Alert flags for the AIN/GPIO corresponding to this bit do not trigger GPO3 output. 1b = Alert flags for the AIN/GPIO corresponding to this bit trigger GPO3 output.

8.6.105 GPO4_TRIG_EVENT_SEL Register (Address = 0xCB) [reset = 0x2]

GPO4_TRIG_EVENT_SEL is shown in Figure 141 and described in Table 116.

Return to the Summary Table.

Figure 141. GPO4_TRIG_EVENT_SEL Register

7	6	5	4	3	2	1	0
GPO4_TRIG_EVENT_SEL[7:0]							
R/W-10b							

Table 116. GPO4_TRIG_EVENT_SEL Register Field Descriptions

Bit	Field	Type	Reset	Description
7-0	GPO4_TRIG_EVENT_SEL[7:0]	R/W	10b	Select the inputs AIN/GPIO[7:0], analog or digital, which can trigger an event based update on GPO4. 0b = Alert flags for the AIN/GPIO corresponding to this bit do not trigger GPO4 output. 1b = Alert flags for the AIN/GPIO corresponding to this bit trigger GPO4 output.

8.6.106 GPO5_TRIG_EVENT_SEL Register (Address = 0xCD) [reset = 0x2]

GPO5_TRIG_EVENT_SEL is shown in Figure 142 and described in Table 117.

Return to the Summary Table.

Copyright © 2019–2020, Texas Instruments Incorporated

Figure 142. GPO5_TRIG_EVENT_SEL Register

7	6	5	4	3	2	1	0
GPO0_TRIG_EVENT_SEL[7:0]							
R/W-10b							

Table 117. GPO5_TRIG_EVENT_SEL Register Field Descriptions

Bit	Field	Type	Reset	Description
7-0	GPO0_TRIG_EVENT_SEL[7:0]	R/W	10b	Select the inputs AIN/GPIO[7:0], analog or digital, which can trigger an event based update on GPO5. 0b = Alert flags for the AIN/GPIO corresponding to this bit do not trigger GPO5 output. 1b = Alert flags for the AIN/GPIO corresponding to this bit trigger GPO5 output.

8.6.107 GPO6_TRIG_EVENT_SEL Register (Address = 0xCF) [reset = 0x2]

GPO6_TRIG_EVENT_SEL is shown in Figure 143 and described in Table 118.

Return to the Summary Table.

Figure 143. GPO6_TRIG_EVENT_SEL Register

7	6	5	4	3	2	1	0
GPO6_TRIG_EVENT_SEL[7:0]							
R/W-10b							

Table 118. GPO6_TRIG_EVENT_SEL Register Field Descriptions

Bit	Field	Type	Reset	Description
7-0	GPO6_TRIG_EVENT_SEL[7:0]	R/W	10b	Select the inputs AIN/GPIO[7:0], analog or digital, which can trigger an event based update on GPO6. 0b = Alert flags for the AIN/GPIO corresponding to this bit do not trigger GPO6 output. 1b = Alert flags for the AIN/GPIO corresponding to this bit trigger GPO6 output.

8.6.108 GPO7_TRIG_EVENT_SEL Register (Address = 0xD1) [reset = 0x2]

GPO7_TRIG_EVENT_SEL is shown in Figure 144 and described in Table 119.

Return to the Summary Table.

Figure 144. GPO7_TRIG_EVENT_SEL Register

7	6	5	4	3	2	1	0
GPO7_TRIG_EVENT_SEL[7:0]							
R/W-10b							

Table 119. GPO7_TRIG_EVENT_SEL Register Field Descriptions

Bit	Field	Type	Reset	Description
7-0	GPO7_TRIG_EVENT_SEL[7:0]	R/W	10b	Select the inputs AIN/GPIO[7:0], analog or digital, which can trigger an event based update on GPO7. 0b = Alert flags for the AIN/GPIO corresponding to this bit do not trigger GPO7 output. 1b = Alert flags for the AIN/GPIO corresponding to this bit trigger GPO7 output.

Copyright © 2019–2020, Texas Instruments Incorporated

8.6.109 GPO_TRIGGER_CFG Register (Address = 0xE9) [reset = 0x0]

GPO_TRIGGER_CFG is shown in Figure 145 and described in Table 120.

Return to the Summary Table.

Figure 145. GPO_TRIGGER_CFG Register

7	6	5	4	3	2	1	0
GPO_TRIGGER_UPDATE_EN[7:0]							
R/W-0b							

Table 120. GPO_TRIGGER_CFG Register Field Descriptions

Bit	Field	Type	Reset	Description
7-0	GPO_TRIGGER_UPDATE_EN[7:0]	R/W	0b	Update digital outputs GPO[7:0] when corresponding trigger is set. 0b = Digital output is not updated in response to alert flags. 1b = Digital output is updated when corresponding alert flags are set. Configure GPOx_TRIG_EVENT_SEL register to select which alert flags can trigger an update on the desired GPO.

8.6.110 GPO_VALUE_TRIG Register (Address = 0xEB) [reset = 0x0]

GPO_VALUE_TRIG is shown in Figure 146 and described in Table 121.

Return to the Summary Table.

Figure 146. GPO_VALUE_TRIG Register

7	6	5	4	3	2	1	0
GPO_VALUE_ON_TRIGGER[7:0]							
R/W-0b							

Table 121. GPO_VALUE_TRIG Register Field Descriptions

Bit	Field	Type	Reset	Description
7-0	GPO_VALUE_ON_TRIGGER[7:0]	R/W	0b	Value to be set on digital outputs GPO[7:0] when corresponding trigger occurs. GPO update on alert flags must be enabled in corresponding bit in GPO_TRIGGER_CFG register. 0b = Digital output set to logic 0. 1b = Digital output set to logic 1.

Copyright © 2019–2020, Texas Instruments Incorporated

9 Application and Implementation

NOTE

Information in the following applications sections is not part of the TI component specification, and TI does not warrant its accuracy or completeness. TI's customers are responsible for determining suitability of components for their purposes. Customers should validate and test their design implementation to confirm system functionality.

9.1 Application Information

The following sections give example circuits and suggestions for using the ADS7138 in various applications.

9.2 Typical Applications

9.2.1 Mixed-Channel Configuration

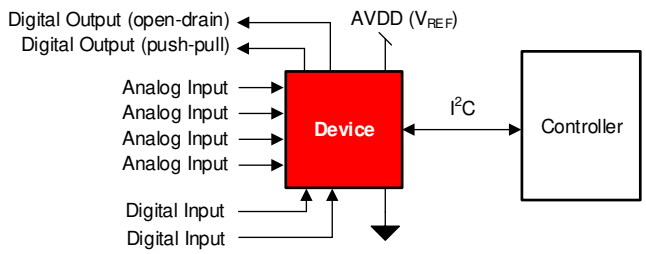

Figure 147. DAQ Circuit: Single-Supply DAQ

9.2.1.1 Design Requirements

The goal of this application is to configure some channels of the ADS7138 as digital inputs, open-drain digital outputs, and push-pull digital outputs.

9.2.1.2 Detailed Design Procedure

The ADS7138 can support GPIO functionality at each input pin. Any analog input pin can be independently configured as a digital input, a digital open-drain output, or a digital push-pull output though the PIN_CFG and GPIO_CFG registers; see Table 4.

9.2.1.2.1 Digital Input

The digital input functionality can be used to monitor a signal within the system. Figure 148 illustrates that the state of the digital input can be read from the GPI_VALUE register.

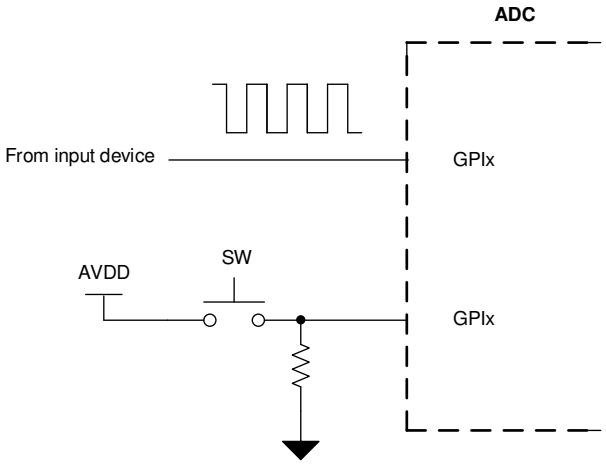

Figure 148. Digital Input

Typical Applications (continued)

9.2.1.2.2 Digital Open-Drain Output

The channels of the ADS7138 can be configured as digital open-drain outputs supporting an output voltage up to 5.5 V. An open-drain output, as shown in Figure 149, consists of an internal FET (Q) connected to ground. The output is idle when not driven by the device, which means Q is off and the pull-up resistor, R_{PULL_UP}, connects the GPOx node to the desired output voltage. The output voltage can range anywhere up to 5.5 V, depending on the external voltage that the GPIOx is pulled up to. When the device is driving the output, Q turns on, thus connecting the pull-up resistor to ground and bringing the node voltage at GPOx low.

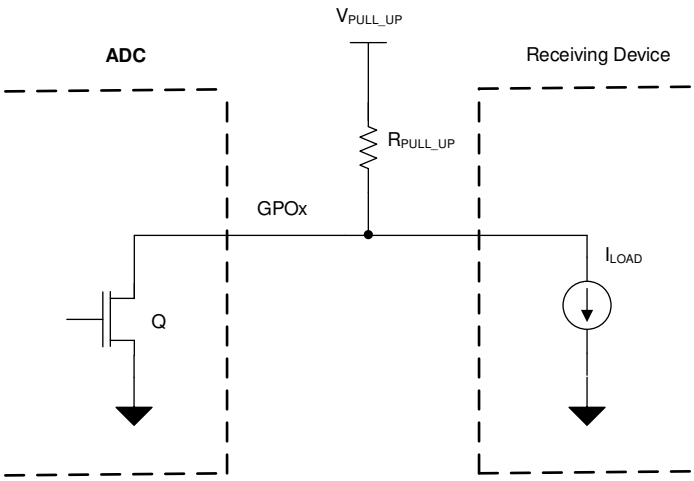

Figure 149. Digital Open-Drain Output

The minimum value of the pullup resistor, as calculated in Equation 3, is given by the ratio of V_{PULL_UP} and the maximum current supported by the device digital output (5 mA).

$$R_{MIN} = (V_{PULL_UP} / 5\ mA) \quad (3)$$

The maximum value of the pullup resistor, as calculated in Equation 4, depends on the minimum input current requirement, I_{LOAD}, of the receiving device driven by this GPIO.

$$R_{MAX} = (V_{PULL_UP} / I_{LOAD}) \quad (4)$$

Select R_{PULL_UP} such that $R_{MIN} < R_{PULL_UP} < R_{MAX}$.

9.2.1.3 Application Curve

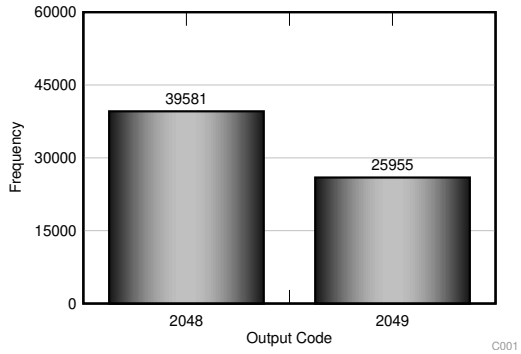

Standard deviation = 0.49 LSB

Figure 150. DC Input Histogram

Copyright © 2019–2020, Texas Instruments Incorporated

Typical Applications (continued)

9.2.2 Digital Push-Pull Output

The channels of the ADS7138 can be configured as digital push-pull outputs supporting an output voltage up to AVDD. As shown in Figure 151, a push-pull output consists of two mirrored opposite bipolar transistors, Q1 and Q2. The device can both source and sink current because only one transistor is on at a time (either Q2 is on and pulls the output low, or Q1 is on and sets the output high). A push-pull configuration always drives the line opposed to an open-drain output where the line is left floating.

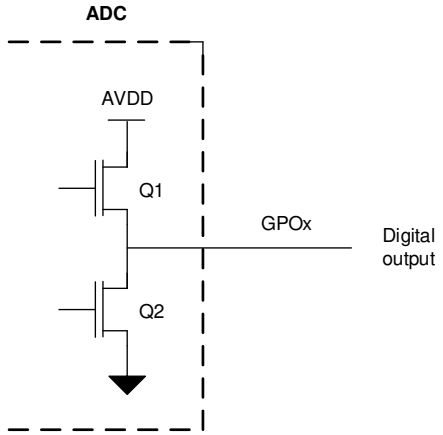

Figure 151. Digital Push-Pull Output

10 Power Supply Recommendations

10.1 AVDD and DVDD Supply Recommendations

The ADS7138 has two separate power supplies: AVDD and DVDD. The device operates on AVDD; DVDD is used for the interface circuits. For supplies greater than 2.35 V, AVDD and DVDD can be shorted externally if single-supply operation is desired. The AVDD supply also defines the full-scale input range of the device. Decouple the AVDD and DVDD pins individually, as shown in Figure 152, with 1-µF ceramic decoupling capacitors. The minimum capacitor value required for AVDD and DVDD is 200 nF and 20 nF, respectively. If both supplies are powered from the same source, a minimum capacitor value of 220 nF is required for decoupling.

Connect a 1-µF decoupling capacitor between the DECAP and GND pins for the internal power supply.

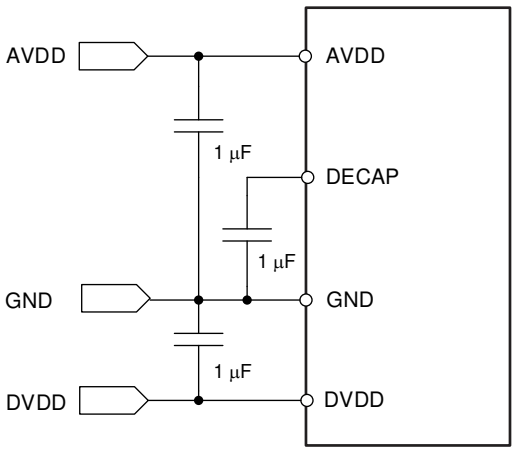

Figure 152. Power-Supply Decoupling

Copyright © 2019–2020, Texas Instruments Incorporated

11 Layout

11.1 Layout Guidelines

Figure 153 shows a board layout example for the ADS7138. Avoid crossing digital lines with the analog signal path and keep the analog input signals and the AVDD supply away from noise sources.

Use 1-µF ceramic bypass capacitors in close proximity to the analog (AVDD) and digital (DVDD) power-supply pins. Avoid placing vias between the AVDD and DVDD pins and the bypass capacitors. Connect the GND pin to the ground plane using short, low-impedance paths. The AVDD supply voltage also functions as the reference voltage for the ADS7138. Place the decoupling capacitor for AVDD close to the device AVDD and GND pins and connect the decoupling capacitor to the device pins with thick copper tracks.

11.2 Layout Example

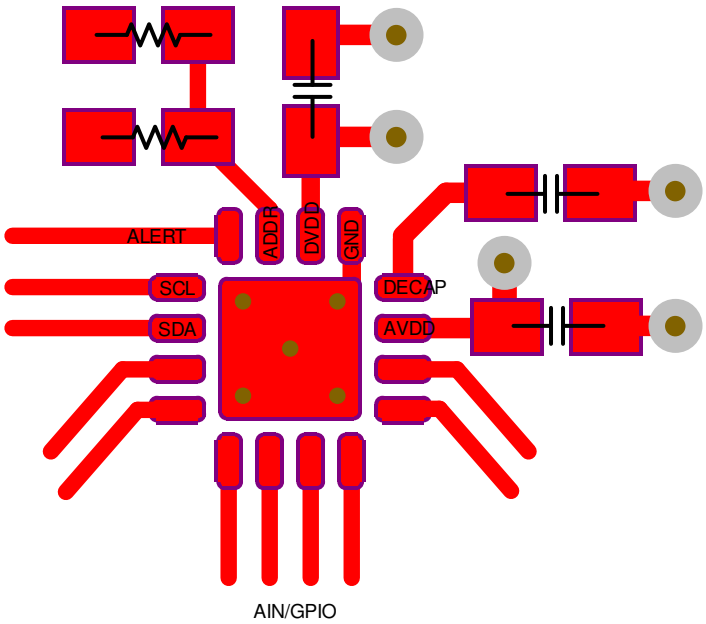

Figure 153. Example Layout

12 Device and Documentation Support

12.1 Receiving Notification of Documentation Updates

To receive notification of documentation updates, navigate to the device product folder on ti.com. In the upper right corner, click on *Alert me* to register and receive a weekly digest of any product information that has changed. For change details, review the revision history included in any revised document.

12.2 Support Resources

TI E2E™ support forums are an engineer's go-to source for fast, verified answers and design help — straight from the experts. Search existing answers or ask your own question to get the quick design help you need.

Linked content is provided "AS IS" by the respective contributors. They do not constitute TI specifications and do not necessarily reflect TI's views; see TI's Terms of Use.

12.3 Trademarks

E2E is a trademark of Texas Instruments.
All other trademarks are the property of their respective owners.

12.4 Electrostatic Discharge Caution

This integrated circuit can be damaged by ESD. Texas Instruments recommends that all integrated circuits be handled with appropriate precautions. Failure to observe proper handling and installation procedures can cause damage.

ESD damage can range from subtle performance degradation to complete device failure. Precision integrated circuits may be more susceptible to damage because very small parametric changes could cause the device not to meet its published specifications.

12.5 Glossary

SLYZ022 — *TI Glossary*.

This glossary lists and explains terms, acronyms, and definitions.

13 Mechanical, Packaging, and Orderable Information

The following pages include mechanical, packaging, and orderable information. This information is the most current data available for the designated devices. This data is subject to change without notice and revision of this document. For browser-based versions of this data sheet, refer to the left-hand navigation.

Copyright © 2019–2020, Texas Instruments Incorporated

PACKAGING INFORMATION

Orderable Device	Status (1)	Package Type	Package Drawing	Pins	Package Qty	Eco Plan (2)	Lead finish/ Ball material (6)	MSL Peak Temp (3)	Op Temp (°C)	Device Marking (4/5)	Samples
ADS7138IRTER	ACTIVE	WQFN	RTE	16	3000	RoHS & Green	NIPDAU	Level-1-260C-UNLIM	-40 to 125	7138	Samples
ADS7138IRTET	ACTIVE	WQFN	RTE	16	250	RoHS & Green	NIPDAU	Level-1-260C-UNLIM	-40 to 125	7138	Samples

(1) The marketing status values are defined as follows:
ACTIVE: Product device recommended for new designs.
LIFEBUY: TI has announced that the device will be discontinued, and a lifetime-buy period is in effect.
NRND: Not recommended for new designs. Device is in production to support existing customers, but TI does not recommend using this part in a new design.
PREVIEW: Device has been announced but is not in production. Samples may or may not be available.
OBSOLETE: TI has discontinued the production of the device.

(2) **RoHS:** TI defines "RoHS" to mean semiconductor products that are compliant with the current EU RoHS requirements for all 10 RoHS substances, including the requirement that RoHS substance do not exceed 0.1% by weight in homogeneous materials. Where designed to be soldered at high temperatures, "RoHS" products are suitable for use in specified lead-free processes. TI may reference these types of products as "Pb-Free".
RoHS Exempt: TI defines "RoHS Exempt" to mean products that contain lead but are compliant with EU RoHS pursuant to a specific EU RoHS exemption.
Green: TI defines "Green" to mean the content of Chlorine (Cl) and Bromine (Br) based flame retardants meet JS709B low halogen requirements of <=1000ppm threshold. Antimony trioxide based flame retardants must also meet the <=1000ppm threshold requirement.

(3) MSL, Peak Temp. - The Moisture Sensitivity Level rating according to the JEDEC industry standard classifications, and peak solder temperature.

(4) There may be additional marking, which relates to the logo, the lot trace code information, or the environmental category on the device.

(5) Multiple Device Markings will be inside parentheses. Only one Device Marking contained in parentheses and separated by a "~" will appear on a device. If a line is indented then it is a continuation of the previous line and the two combined represent the entire Device Marking for that device.

(6) Lead finish/Ball material - Orderable Devices may have multiple material finish options. Finish options are separated by a vertical ruled line. Lead finish/Ball material values may wrap to two lines if the finish value exceeds the maximum column width.

Important Information and Disclaimer: The information provided on this page represents TI's knowledge and belief as of the date that it is provided. TI bases its knowledge and belief on information provided by third parties, and makes no representation or warranty as to the accuracy of such information. Efforts are underway to better integrate information from third parties. TI has taken and continues to take reasonable steps to provide representative and accurate information but may not have conducted destructive testing or chemical analysis on incoming materials and chemicals. TI and TI suppliers consider certain information to be proprietary, and thus CAS numbers and other limited information may not be available for release.

In no event shall TI's liability arising out of such information exceed the total purchase price of the TI part(s) at issue in this document sold by TI to Customer on an annual basis.

OTHER QUALIFIED VERSIONS OF ADS7138 :

- Automotive : ADS7138-Q1

NOTE: Qualified Version Definitions:

- Automotive - Q100 devices qualified for high-reliability automotive applications targeting zero defects

TAPE AND REEL INFORMATION

REEL DIMENSIONS

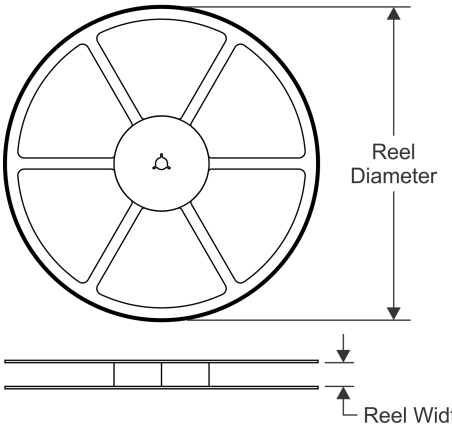

TAPE DIMENSIONS

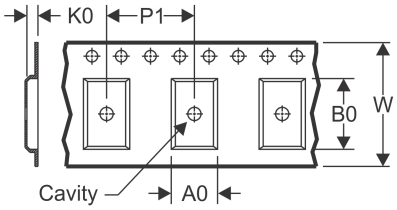

A0	Dimension designed to accommodate the component width
B0	Dimension designed to accommodate the component length
K0	Dimension designed to accommodate the component thickness
W	Overall width of the carrier tape
P1	Pitch between successive cavity centers

QUADRANT ASSIGNMENTS FOR PIN 1 ORIENTATION IN TAPE

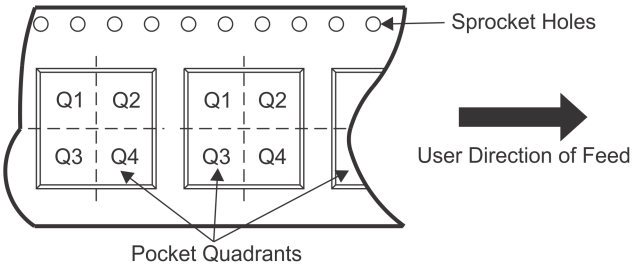

*All dimensions are nominal

Device	Package Type	Package Drawing	Pins	SPQ	Reel Diameter (mm)	Reel Width W1 (mm)	A0 (mm)	B0 (mm)	K0 (mm)	P1 (mm)	W (mm)	Pin1 Quadrant
ADS7138IRTER	WQFN	RTE	16	3000	330.0	12.4	3.3	3.3	1.1	8.0	12.0	Q2
ADS7138IRTET	WQFN	RTE	16	250	180.0	12.4	3.3	3.3	1.1	8.0	12.0	Q2

TAPE AND REEL BOX DIMENSIONS

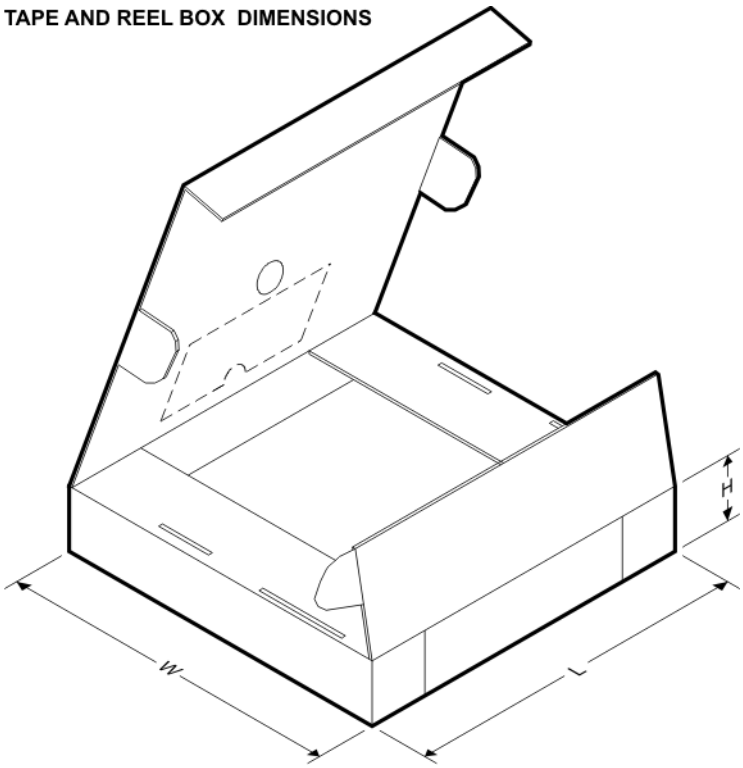

*All dimensions are nominal

Device	Package Type	Package Drawing	Pins	SPQ	Length (mm)	Width (mm)	Height (mm)
ADS7138IRTER	WQFN	RTE	16	3000	367.0	367.0	35.0
ADS7138IRTET	WQFN	RTE	16	250	210.0	185.0	35.0

RTE (S–PWQFN–N16) PLASTIC QUAD FLATPACK NO–LEAD

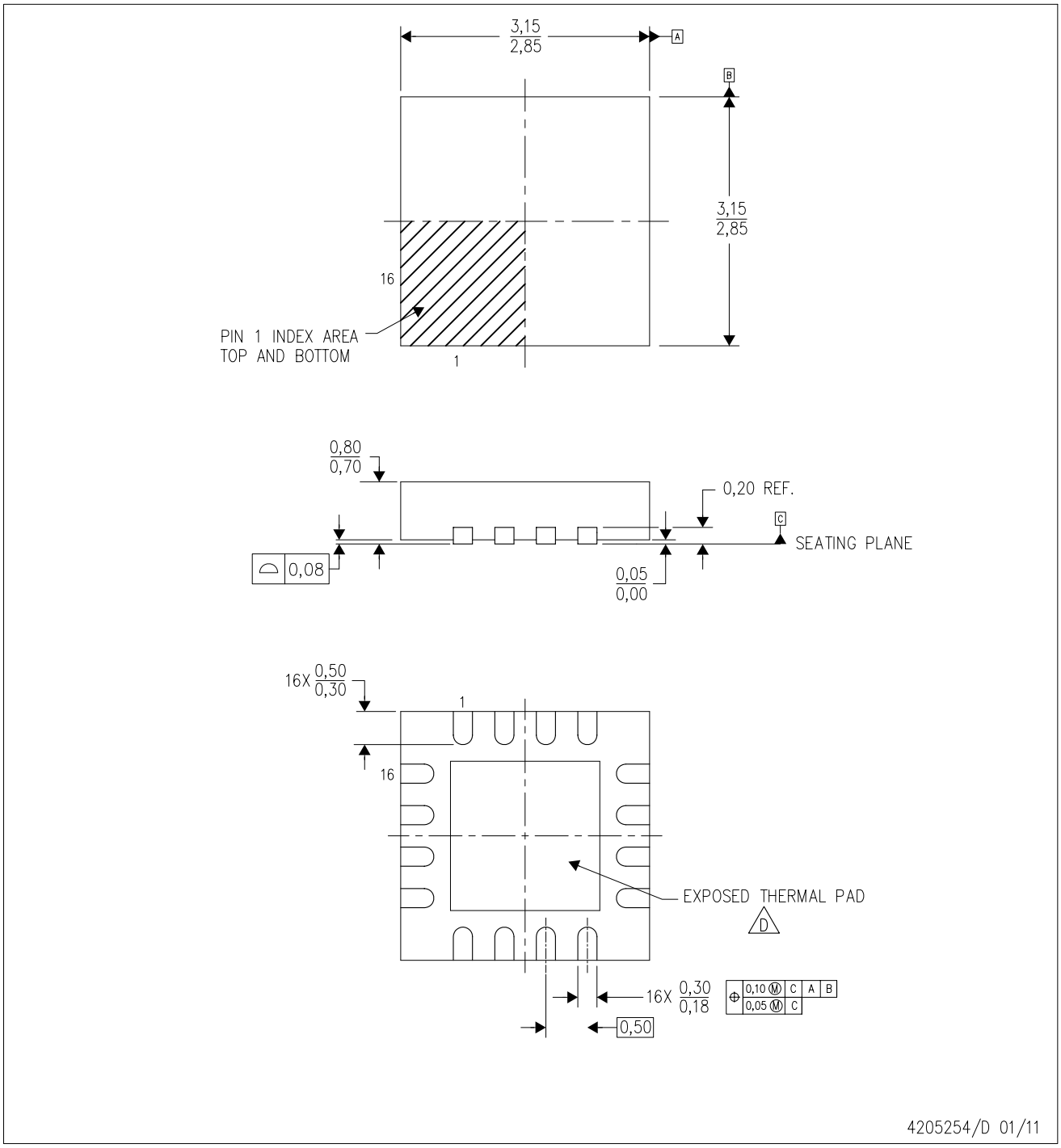

NOTES:
A. All linear dimensions are in millimeters. Dimensioning and tolerancing per ASME Y14.5M–1994.
B. This drawing is subject to change without notice.
C. Quad Flatpack, No–leads (QFN) package configuration.
D. The package thermal pad must be soldered to the board for thermal and mechanical performance. See the Product Data Sheet for details regarding the exposed thermal pad dimensions.
E. Falls within JEDEC MO–220.

RTE (S–PWQFN–N16) PLASTIC QUAD FLATPACK NO–LEAD

THERMAL INFORMATION

This package incorporates an exposed thermal pad that is designed to be attached directly to an external heatsink. The thermal pad must be soldered directly to the printed circuit board (PCB). After soldering, the PCB can be used as a heatsink. In addition, through the use of thermal vias, the thermal pad can be attached directly to the appropriate copper plane shown in the electrical schematic for the device, or alternatively, can be attached to a special heatsink structure designed into the PCB. This design optimizes the heat transfer from the integrated circuit (IC).

For information on the Quad Flatpack No–Lead (QFN) package and its advantages, refer to Application Report, QFN/SON PCB Attachment, Texas Instruments Literature No. SLUA271. This document is available at www.ti.com.

The exposed thermal pad dimensions for this package are shown in the following illustration.

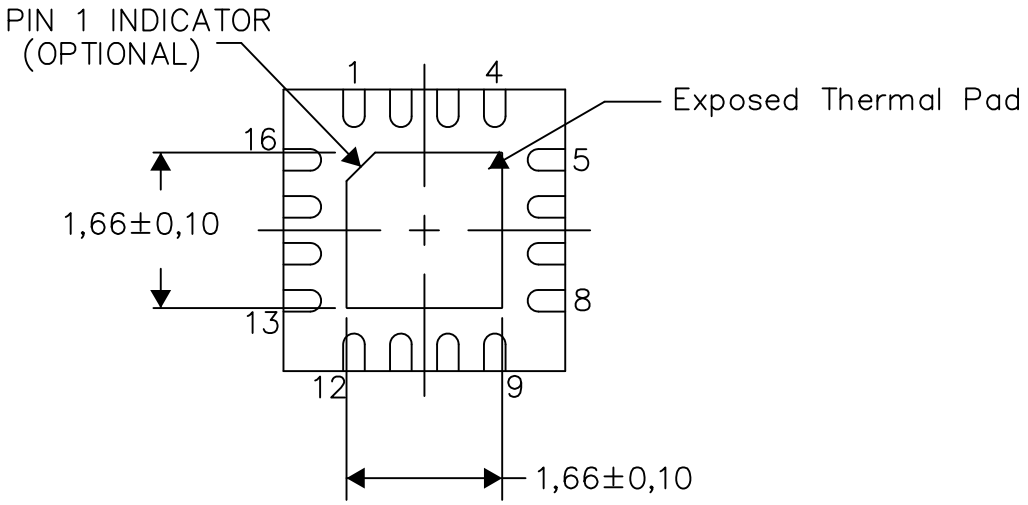

Bottom View

Exposed Thermal Pad Dimensions

4206446–8/U 08/15

NOTE: A. All linear dimensions are in millimeters

RTE (S–PWQFN–N16) PLASTIC QUAD FLATPACK NO–LEAD

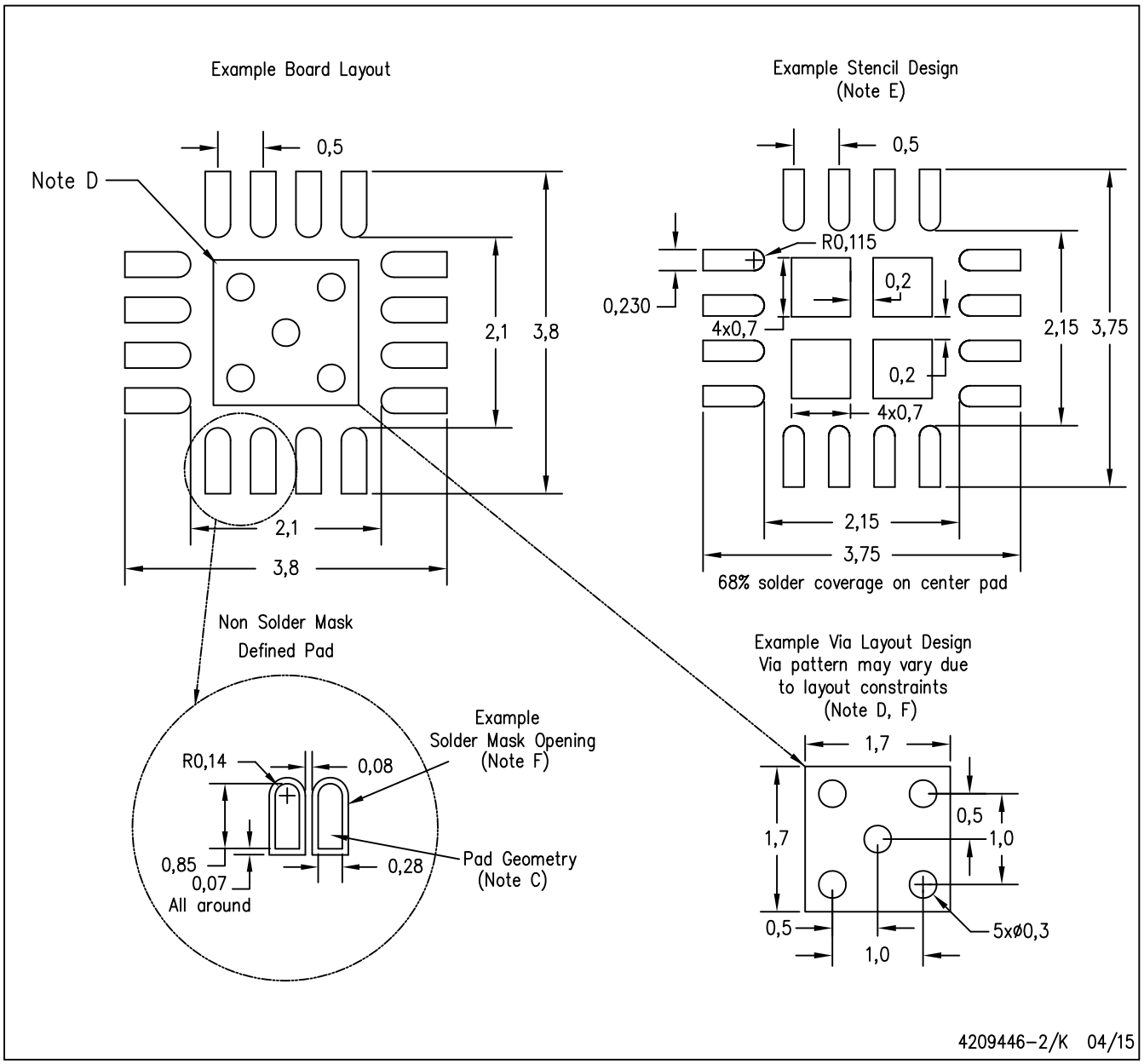

NOTES:
A. All linear dimensions are in millimeters.
B. This drawing is subject to change without notice.
C. Publication IPC–7351 is recommended for alternate designs.
D. This package is designed to be soldered to a thermal pad on the board. Refer to Application Note, Quad Flat–Pack Packages, Texas Instruments Literature No. SLUA271, and also the Product Data Sheets for specific thermal information, via requirements, and recommended board layout. These documents are available at www.ti.com <http://www.ti.com>.
E. Laser cutting apertures with trapezoidal walls and also rounding corners will offer better paste release. Customers should contact their board assembly site for stencil design recommendations. Refer to IPC 7525 for stencil design considerations.
F. Customers should contact their board fabrication site for minimum solder mask web tolerances between signal pads.

IMPORTANT NOTICE AND DISCLAIMER

TI PROVIDES TECHNICAL AND RELIABILITY DATA (INCLUDING DATASHEETS), DESIGN RESOURCES (INCLUDING REFERENCE DESIGNS), APPLICATION OR OTHER DESIGN ADVICE, WEB TOOLS, SAFETY INFORMATION, AND OTHER RESOURCES “AS IS” AND WITH ALL FAULTS, AND DISCLAIMS ALL WARRANTIES, EXPRESS AND IMPLIED, INCLUDING WITHOUT LIMITATION ANY IMPLIED WARRANTIES OF MERCHANTABILITY, FITNESS FOR A PARTICULAR PURPOSE OR NON-INFRINGEMENT OF THIRD PARTY INTELLECTUAL PROPERTY RIGHTS.

These resources are intended for skilled developers designing with TI products. You are solely responsible for (1) selecting the appropriate TI products for your application, (2) designing, validating and testing your application, and (3) ensuring your application meets applicable standards, and any other safety, security, or other requirements. These resources are subject to change without notice. TI grants you permission to use these resources only for development of an application that uses the TI products described in the resource. Other reproduction and display of these resources is prohibited. No license is granted to any other TI intellectual property right or to any third party intellectual property right. TI disclaims responsibility for, and you will fully indemnify TI and its representatives against, any claims, damages, costs, losses, and liabilities arising out of your use of these resources.

TI’s products are provided subject to TI’s Terms of Sale (https:www.ti.com/legal/termsofsale.html) or other applicable terms available either on ti.com or provided in conjunction with such TI products. TI’s provision of these resources does not expand or otherwise alter TI’s applicable warranties or warranty disclaimers for TI products.

Mailing Address: Texas Instruments, Post Office Box 655303, Dallas, Texas 75265
Copyright © 2021, Texas Instruments Incorporated