molex

# GPEC IV 95 WAY RECEPTACLE SEALED ASSEMBLY MAT SEAL

## BOM AND PIN OUT SHEET

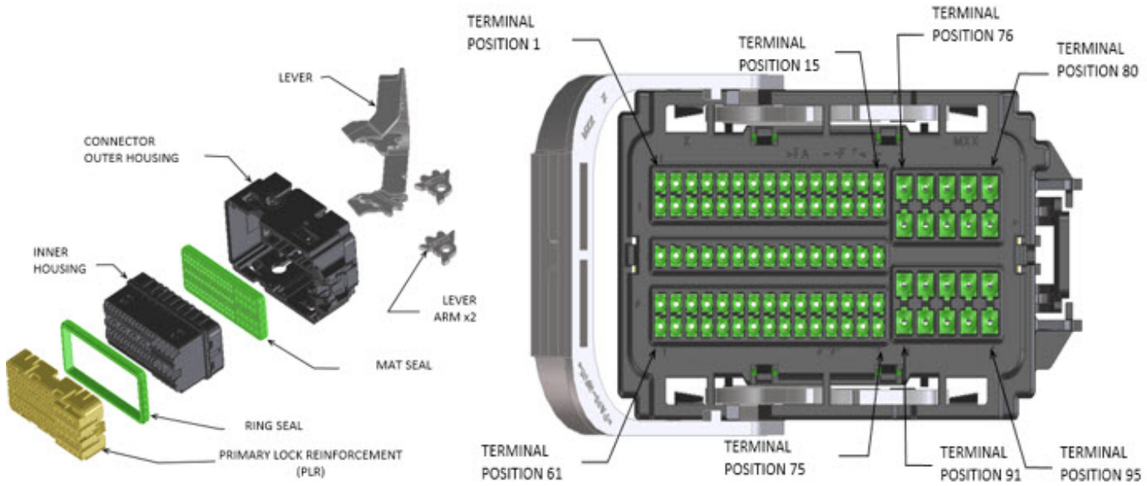


| ABBREVIATION | DESCRIPTION | COLOR | MATERIAL |
|---|---|---|---|
| 1-BLACK | OUTER HOUSING KEYING OPTION 1 | BLACK | PA66 GF35 |
| 2-BLACK | OUTER HOUSING KEYING OPTION 2 | BLACK | PA66 GF35 |
| 3-BLACK | OUTER HOUSING KEYING OPTION 3 | BLACK | PA66 GF35 |
| 4-BLACK | OUTER HOUSING KEYING OPTION 4 | BLACK | PA66 GF35 |
| 5-BLACK | OUTER HOUSING KEYING OPTION 5 | BLACK | PA66 GF35 |
| NIL - GRAY | OUTER HOUSING KEYING OPTION NIL | GRAY | PA66 GF35 |
| IH | INNER HOUSING | BLACK | PA66 GF35 |
| PLR | TPA/PLR | NATURAL | PA66 GF35 |
| LE | LEVER - END LATCH | GRAY | PA66 GF35 |
| LT | LEVER - TOP LATCH | GRAY | PA66 GF35 |
| LA | LEVER ARM | GRAY | PA66 GF35 |
| M | MAT SEAL | GREEN | INHERENTLY LUBRICATED SILICONE |
| R | RING SEAL | GREEN | INHERENTLY LUBRICATED SILICONE |

FOR ADDITIONAL INFORMATION SEE 349920001-SD

LOOK AT 2032000001-SD FOR WIRE DRESS COVER OPTION

| ASSEMBLY DESCRIPTION | ASSEMBLY PART NUMBER | COMPONENT<br>THE PRESENCE OF AN ABBREVIATION INDICATES THE PRESENCE OF THAT COMPONENT. | | | | | | | BLOCKED TERMINALS<br>CAVITY WITH A NUMBER INDICATES BLOCKED TERMINAL POSITION<br>CAVITY WITHOUT A NUMBER INDICATES OPEN TERMINAL POSITION | | | | | | | | | | | | | | | | | | | | STATUS | COMMENTS |
|---|---|---|---|---|---|---|---|---|---|---|---|---|---|---|---|---|---|---|---|---|---|---|---|---|---|---|---|---|---|
| | | OUTER HOUSING KEY/COLOR | INNER HOUSING | PLR | LEVER | LEVER ARM (x/2) | MAT SEAL | RING SEAL | | | | | | | | | | | | | | | | | | | | | |
| GPEC RCPT CONN 95 CKT END LVR KEY 1/95 | 349920001 | 1-BLACK | IH | PLR | LE | LA | M | R | - | - | - | - | - | - | - | - | - | - | - | - | - | - | - | - | - | - | - | SALEABLE | |
| | | | | | | | | | - | - | - | - | - | - | - | - | - | - | - | - | - | - | - | - | - | - | - | | |
| | | | | | | | | | - | - | - | - | - | - | - | - | - | - | - | - | - | | | | | | | | |
| | | | | | | | | | - | - | - | - | - | - | - | - | - | - | - | - | - | - | - | - | - | - | - | | |
| | | | | | | | | | - | - | - | - | - | - | - | - | - | - | - | - | - | - | - | - | - | - | - | | |
| GPEC RCPT CONN 95 CKT END LVR KEY 1/0 | 349920002 | 1-BLACK | IH | PLR | LE | LA | M | R | 1 | 2 | 3 | 4 | 5 | 6 | 7 | 8 | 9 | 10 | 11 | 12 | 13 | 14 | 15 | 76 | 77 | 78 | 79 | 80 | SALEABLE | |
| | | | | | | | | | 16 | 17 | 18 | 19 | 20 | 21 | 22 | 23 | 24 | 25 | 26 | 27 | 28 | 29 | 30 | 81 | 82 | 83 | 84 | 85 | | |
| | | | | | | | | | 31 | 32 | 33 | 34 | 35 | 36 | 37 | 38 | 39 | 40 | 41 | 42 | 43 | 44 | 45 | | | | | | | |
| | | | | | | | | | 46 | 47 | 48 | 49 | 50 | 51 | 52 | 53 | 54 | 55 | 56 | 57 | 58 | 59 | 60 | 86 | 87 | 88 | 89 | 90 | | |
| | | | | | | | | | 61 | 62 | 63 | 64 | 65 | 66 | 67 | 68 | 69 | 70 | 71 | 72 | 73 | 74 | 75 | 91 | 92 | 93 | 94 | 95 | | |
| GPEC RCPT CONN 95 CKT END LVR KEY 1/68 | 349920003 | 1-BLACK | IH | PLR | LE | LA | M | R | - | - | 3 | - | - | - | - | - | 9 | 10 | - | 12 | - | - | 15 | - | - | 78 | - | - | SALEABLE | |
| | | | | | | | | | - | - | 18 | - | - | - | - | - | 24 | 25 | - | - | - | - | 30 | - | - | 83 | - | - | | |
| | | | | | | | | | - | - | - | - | - | - | - | - | - | - | - | - | - | - | 45 | | | | | | | |
| | | | | | | | | | - | 47 | 48 | - | - | - | - | - | - | - | 56 | - | - | - | - | - | 87 | 88 | - | - | | |
| | | | | | | | | | - | - | - | 64 | 65 | - | - | 68 | 69 | 70 | 71 | 72 | 73 | 74 | 75 | - | - | - | - | - | | |
| GPEC RCPT CONN 95 CKT END LVR KEY 1/67 | 349920004 | 1-BLACK | IH | PLR | LE | LA | M | R | - | - | 3 | - | - | - | - | - | 9 | 10 | - | 12 | - | - | 15 | - | - | 78 | - | - | SALEABLE | |
| | | | | | | | | | - | - | 18 | - | - | - | - | - | 24 | 25 | - | - | - | - | 30 | - | - | 83 | - | - | | |
| | | | | | | | | | 31 | - | - | - | - | - | - | - | - | - | - | - | - | - | 45 | | | | | | | |
| | | | | | | | | | - | 47 | 48 | - | - | - | - | - | - | - | 56 | - | - | - | - | - | 87 | 88 | - | - | | |
| | | | | | | | | | - | - | - | 64 | 65 | - | - | 68 | 69 | 70 | 71 | 72 | 73 | 74 | 75 | - | - | - | - | - | | |
| GPEC RCPT CONN 95 CKT END LVR KEY 1/74 | 349920005 | 1-BLACK | IH | PLR | LE | LA | M | R | - | - | 3 | - | 5 | - | - | - | 9 | - | - | 12 | 13 | 14 | - | - | - | - | - | - | SALEABLE | |
| | | | | | | | | | - | - | 18 | - | - | - | - | - | 24 | - | - | - | - | - | - | - | - | 83 | - | - | | |
| | | | | | | | | | 31 | - | - | - | - | - | - | - | - | - | - | - | - | - | - | | | | | | | |
| | | | | | | | | | 46 | 47 | 48 | - | - | - | - | - | - | - | 56 | - | - | - | - | - | 87 | 88 | - | - | | |
| | | | | | | | | | 61 | - | - | 64 | - | - | - | - | 69 | 70 | 71 | - | - | - | - | - | - | - | - | - | | |
| GPEC RCPT CONN 95 CKT END LVR KEY 1/65 | 349920006 | 1-BLACK | IH | PLR | LE | LA | M | R | - | - | 3 | - | 5 | - | - | - | 9 | - | - | 12 | 13 | 14 | 15 | - | - | 78 | - | - | SALEABLE | |
| | | | | | | | | | - | - | 18 | - | - | - | - | - | 24 | - | - | 27 | - | - | - | - | - | 83 | - | - | | |
| | | | | | | | | | 31 | - | - | - | 35 | - | - | - | - | - | - | - | - | - | - | | | | | | | |
| | | | | | | | | | 46 | 47 | 48 | - | - | - | - | - | 54 | - | 56 | - | - | - | - | - | 87 | 88 | - | - | | |
| | | | | | | | | | 61 | - | - | 64 | - | - | - | - | 69 | 70 | 71 | 72 | 73 | 74 | 75 | - | - | - | - | - | | |
| GPEC RCPT CONN 95 CKT END LVR KEY 1/77 | 349920007 | 1-BLACK | IH | PLR | LE | LA | M | R | - | - | 3 | - | 5 | - | - | - | 9 | - | - | 12 | 13 | 14 | - | - | - | - | - | - | SALEABLE | |
| | | | | | | | | | - | - | 18 | - | - | - | - | - | 24 | - | - | - | - | - | - | - | - | 83 | - | - | | |
| | | | | | | | | | 31 | - | - | - | - | - | - | - | - | - | - | - | - | - | - | | | | | | | |
| | | | | | | | | | 46 | - | - | - | - | - | - | - | - | - | - | - | - | - | - | - | 87 | 88 | - | - | | |
| | | | | | | | | | 61 | - | - | 64 | - | - | - | - | 69 | 70 | 71 | - | - | - | - | - | - | - | - | - | | |

molex

# GPEC IV 95 WAY RECEPTACLE SEALED ASSEMBLY MAT SEAL

## BOM AND PIN OUT SHEET

| ASSEMBLY DESCRIPTION | ASSEMBLY PART NUMBER | COMPONENT<br>THE PRESENCE OF AN ABBREVIATION INDICATES THE PRESENCE OF THAT COMPONENT. | | | | | | | BLOCKED TERMINALS<br>CAVITY WITH A NUMBER INDICATES BLOCKED TERMINAL POSITION<br>CAVITY WITHOUT A NUMBER INDICATES OPEN TERMINAL POSITION | | | | | | | | | | | | | | | | | | | | | | STATUS | COMMENTS |
|---|---|---|---|---|---|---|---|---|---|---|---|---|---|---|---|---|---|---|---|---|---|---|---|---|---|---|---|---|---|---|---|
| | | OUTER HOUSING KEY/COLOR | INNER HOUSING | PLR | LEVER | LEVER ARM (x/2) | MAT SEAL | RING SEAL | | | | | | | | | | | | | | | | | | | | | | | |
| GPEC RCPT CONN 95 CKT END LVR KEY 1/75 | 349920008 | 1-BLACK | IH | PLR | LE | LA | M | R | 1 | - | 3 | - | 5 | - | 7 | - | - | 10 | - | - | - | - | 15 | | - | - | 78 | - | - | SALEABLE | |
| | | | | | | | | | 16 | - | - | - | - | - | - | - | - | - | - | - | - | - | - | | - | - | - | - | - | | |
| | | | | | | | | | - | - | - | - | - | - | - | - | - | - | 41 | - | - | - | - | | | | | | | | |
| | | | | | | | | | 46 | - | 48 | - | - | - | - | - | - | - | 56 | - | - | - | - | | - | - | - | - | - | | |
| | | | | | | | | | 61 | - | 63 | 64 | - | - | 67 | 68 | 69 | - | - | - | - | 74 | 75 | | - | - | - | - | - | | |
| GPEC RCPT CONN 95 CKT END LVR KEY 1/76 | 349920009 | 1-BLACK | IH | PLR | LE | LA | M | R | 1 | - | 3 | - | 5 | - | 7 | - | - | 10 | - | - | - | - | - | | - | - | - | - | - | SALEABLE | |
| | | | | | | | | | 16 | - | - | - | - | - | - | - | - | - | - | - | - | - | - | | - | - | - | - | - | | |
| | | | | | | | | | - | - | - | - | - | - | - | - | - | - | 41 | - | - | - | - | | | | | | | | |
| | | | | | | | | | 46 | - | 48 | - | - | - | - | - | - | - | 56 | - | - | - | - | | - | - | - | - | - | | |
| | | | | | | | | | 61 | - | 63 | 64 | - | 66 | 67 | 68 | 69 | - | - | - | - | 74 | 75 | | - | - | - | - | - | | |
| GPEC RCPT CONN 95 CKT END LVR KEY 1/80 | 349920010 | 1-BLACK | IH | PLR | LE | LA | M | R | 1 | - | 3 | - | 5 | - | 7 | - | - | 10 | - | - | - | - | - | | - | - | - | - | - | SALEABLE | |
| | | | | | | | | | 16 | - | - | - | - | - | - | - | - | - | - | - | - | - | - | | - | - | - | - | - | | |
| | | | | | | | | | - | - | - | - | - | - | - | - | - | - | 41 | - | - | - | - | | | | | | | | |
| | | | | | | | | | 46 | - | 48 | - | - | - | - | - | - | - | 56 | - | - | - | - | | - | - | - | - | - | | |
| | | | | | | | | | 61 | - | 63 | 64 | - | - | 67 | - | 69 | - | - | - | - | - | - | | - | - | - | - | - | | |
| GPEC RCPT CONN 95 CKT END LVR KEY 1/79 | 349920011 | 1-BLACK | IH | PLR | LE | LA | M | R | 1 | - | - | - | - | - | - | - | - | - | - | - | - | - | 15 | | - | - | 78 | - | - | SALEABLE | |
| | | | | | | | | | 16 | - | - | - | - | - | 22 | - | - | - | - | - | - | - | - | | - | - | 83 | - | - | | |
| | | | | | | | | | - | - | - | - | - | - | - | - | - | - | - | - | - | - | - | | | | | | | | |
| | | | | | | | | | - | - | - | - | - | - | - | - | - | 55 | 56 | - | - | - | - | | - | - | - | - | - | | |
| | | | | | | | | | - | 62 | 63 | 64 | - | - | 67 | 68 | 69 | - | - | - | - | 74 | 75 | | - | - | - | - | - | | |
| GPEC RCPT CONN 95 CKT END LVR KEY 1/74 | 349920012 | 1-BLACK | IH | PLR | LE | LA | M | R | - | - | 3 | - | - | - | - | - | 9 | 10 | - | 12 | - | - | - | | - | - | - | - | - | SALEABLE | |
| | | | | | | | | | - | - | 18 | - | - | - | - | - | 24 | 25 | - | - | - | - | - | | - | - | 83 | - | - | | |
| | | | | | | | | | 31 | - | - | - | - | - | - | - | - | - | - | - | - | - | - | | | | | | | | |
| | | | | | | | | | - | 47 | 48 | - | - | - | - | - | - | - | 56 | - | - | - | - | | - | 87 | 88 | - | - | | |
| | | | | | | | | | - | - | - | 64 | 65 | - | - | 68 | 69 | - | 71 | - | - | 74 | 75 | | - | - | - | - | - | | |
| GPEC RCPT CONN 95 CKT END LVR KEY 1/83 | 349920013 | 1-BLACK | IH | PLR | LE | LA | M | R | 1 | - | - | - | - | - | - | - | - | - | - | - | - | - | - | | - | - | 78 | - | - | SALEABLE | |
| | | | | | | | | | 16 | - | - | - | - | - | - | - | - | - | - | - | - | - | - | | - | - | 83 | - | - | | |
| | | | | | | | | | - | - | - | - | - | - | - | - | - | - | - | - | - | - | - | | | | | | | | |
| | | | | | | | | | - | - | - | - | - | - | - | - | - | 55 | 56 | - | - | - | - | | - | - | - | - | - | | |
| | | | | | | | | | - | 62 | 63 | 64 | - | - | 67 | 68 | 69 | - | - | - | - | - | - | | - | - | - | - | - | | |
| GPEC RCPT CONN 95 CKT END LVR KEY 1/79 | 349920014 | 1-BLACK | IH | PLR | LE | LA | M | R | - | - | - | - | - | - | - | - | 9 | - | - | - | - | - | - | | - | - | - | - | - | SALEABLE | |
| | | | | | | | | | - | - | 18 | - | - | - | - | - | 24 | 25 | - | - | - | - | - | | - | - | - | - | - | | |
| | | | | | | | | | - | - | - | - | - | - | - | - | - | - | - | - | - | - | - | | | | | | | | |
| | | | | | | | | | - | 47 | 48 | - | - | - | - | - | - | - | 56 | - | - | - | - | | - | 87 | 88 | - | - | | |
| | | | | | | | | | - | - | - | 64 | 65 | - | - | 68 | 69 | - | 71 | - | - | 74 | 75 | | - | - | - | - | - | | |
| GPEC RCPT CONN 95 CKT END LVR KEY 1/82 | 349920015 | 1-BLACK | IH | PLR | LE | LA | M | R | - | - | - | - | - | - | - | - | 9 | - | - | - | - | - | - | | - | - | - | - | - | SALEABLE | |
| | | | | | | | | | - | - | 18 | - | - | - | - | - | 24 | 25 | - | - | - | - | - | | - | - | - | - | - | | |
| | | | | | | | | | - | - | - | - | - | - | - | - | - | - | - | - | - | - | - | | | | | | | | |
| | | | | | | | | | - | - | - | - | - | - | - | - | - | - | - | - | - | - | - | | - | 87 | 88 | - | - | | |
| | | | | | | | | | - | - | - | 64 | 65 | - | - | 68 | 69 | - | 71 | - | - | 74 | 75 | | - | - | - | - | - | | |
| GPEC RCPT CONN 95 CKT END LVR KEY 1/77 | 349920016 | 1-BLACK | IH | PLR | LE | LA | M | R | 1 | - | - | - | - | - | - | - | - | - | - | - | - | - | 15 | | - | - | 78 | - | - | SALEABLE | |
| | | | | | | | | | 16 | - | - | - | - | - | 22 | - | - | - | - | - | - | - | - | | - | - | 83 | - | - | | |
| | | | | | | | | | - | - | - | - | - | - | - | - | - | - | - | - | - | - | - | | | | | | | | |
| | | | | | | | | | - | - | - | - | - | - | - | - | - | 55 | 56 | 57 | - | - | - | | - | - | - | - | - | | |
| | | | | | | | | | - | 62 | 63 | 64 | - | 66 | 67 | 68 | 69 | - | - | - | - | 74 | 75 | | - | - | - | - | - | | |
| GPEC RCPT CONN 95 CKT END LVR KEY 1/67 | 349920017 | 1-BLACK | IH | PLR | LE | LA | M | R | - | - | 3 | - | - | - | - | - | 9 | 10 | - | 12 | - | - | 15 | | - | - | 78 | - | - | SALEABLE | |
| | | | | | | | | | - | - | 18 | - | - | - | - | - | 24 | 25 | - | - | - | - | 30 | | - | - | 83 | - | - | | |
| | | | | | | | | | 31 | - | - | - | - | - | - | - | - | - | - | - | - | - | 45 | | | | | | | | |
| | | | | | | | | | - | - | - | - | - | - | - | - | - | - | - | - | - | - | - | | 86 | 87 | 88 | - | - | | |
| | | | | | | | | | - | 62 | 63 | 64 | 65 | - | - | 68 | 69 | 70 | 71 | 72 | 73 | 74 | 75 | | - | - | - | - | - | | |

molex

# GPEC IV 95 WAY RECEPTACLE SEALED ASSEMBLY MAT SEAL

## BOM AND PIN OUT SHEET

| ASSEMBLY DESCRIPTION | ASSEMBLY PART NUMBER | COMPONENT<br>THE PRESENCE OF AN ABBREVIATION INDICATES THE PRESENCE OF THAT COMPONENT. | | | | | | | BLOCKED TERMINALS<br>CAVITY WITH A NUMBER INDICATES BLOCKED TERMINAL POSITION<br>CAVITY WITHOUT A NUMBER INDICATES OPEN TERMINAL POSITION | | | | | | | | | | | | | | | | | | | | STATUS | COMMENTS |
|---|---|---|---|---|---|---|---|---|---|---|---|---|---|---|---|---|---|---|---|---|---|---|---|---|---|---|---|---|---|
| | | OUTER HOUSING KEY/COLOR | INNER HOUSING | PLR | LEVER | LEVER ARM (x/2) | MAT SEAL | RING SEAL | | | | | | | | | | | | | | | | | | | | | |
| GPEC RCPT CONN 95 CKT END LVR KEY 1/79 | 349920018 | 1-BLACK | IH | PLR | LE | LA | M | R | - | - | - | - | - | - | - | - | 9 | - | - | - | - | - | - | - | - | - | - | SALEABLE | |
| | | | | | | | | | - | - | 18 | - | - | - | - | - | 24 | 25 | - | - | - | - | - | - | - | - | - | | |
| | | | | | | | | | - | - | - | - | - | - | - | - | - | - | - | - | - | - | | | | | | | |
| | | | | | | | | | - | 47 | 48 | - | - | - | - | - | - | - | - | - | - | - | 86 | 87 | 88 | - | - | | |
| | | | | | | | | | - | - | - | 64 | 65 | - | - | 68 | 69 | - | 71 | - | - | 74 | 75 | - | - | - | - | - | | |
| GPEC RCPT CONN 95 CKT END LVR KEY 3/80 | 349920019 | 3-BLACK | IH | PLR | LE | LA | M | R | - | - | - | - | - | - | - | - | - | - | - | - | - | - | - | - | - | - | - | SALEABLE | |
| | | | | | | | | | - | - | - | - | - | - | - | - | - | - | - | - | - | - | - | - | - | - | - | | |
| | | | | | | | | | - | - | - | - | - | - | - | - | - | - | - | - | - | - | | | | | | | |
| | | | | | | | | | - | - | - | - | - | - | - | - | - | - | - | - | - | - | - | - | - | - | - | | |
| | | | | | | | | | 61 | 62 | 63 | 64 | 65 | 66 | 67 | 68 | 69 | 70 | 71 | 72 | 73 | 74 | 75 | - | - | - | - | - | |
| GPEC RCPT CONN 95 CKT END LVR KEY 1/47 | 349920020 | 1-BLACK | IH | PLR | LE | LA | M | R | - | - | 3 | 4 | - | - | - | - | 9 | - | - | 12 | 13 | - | 15 | - | 77 | 78 | 79 | 80 | SALEABLE | |
| | | | | | | | | | 16 | 17 | 18 | - | 20 | 21 | - | 23 | 24 | 25 | 26 | - | 28 | - | 30 | - | - | - | - | 85 | | |
| | | | | | | | | | - | - | - | - | - | - | - | 38 | - | - | - | - | 43 | 44 | 45 | | | | | | | |
| | | | | | | | | | 46 | 47 | 48 | 49 | - | 51 | - | 53 | 54 | - | 56 | - | - | 59 | - | 86 | - | - | - | - | | |
| | | | | | | | | | 61 | - | - | - | - | 66 | 67 | 68 | 69 | 70 | 71 | - | 73 | 74 | - | 91 | - | - | 94 | 95 | | |
| GPEC RCPT CONN 95 CKT END LVR KEY 1/67 | 349920021 | 1-BLACK | IH | PLR | LE | LA | M | R | - | - | - | - | - | - | - | - | - | - | - | - | - | - | - | - | - | - | - | SALEABLE | |
| | | | | | | | | | - | - | - | - | - | - | 22 | - | 24 | 25 | 26 | - | - | - | - | 81 | - | - | - | - | | |
| | | | | | | | | | - | 32 | - | - | 35 | 36 | 37 | - | 39 | - | - | 42 | 43 | 44 | - | | | | | | | |
| | | | | | | | | | 46 | - | - | 49 | - | 51 | - | - | - | - | - | 57 | - | - | 60 | 86 | 87 | 88 | 89 | - | | |
| | | | | | | | | | - | - | - | - | - | 66 | 67 | - | - | - | 71 | - | 73 | 74 | - | - | 92 | - | - | - | | |
| GPEC RCPT CONN 95 CKT END LVR KEY 1/74 | 349920022 | 1-BLACK | IH | PLR | LE | LA | M | R | - | - | - | - | - | - | - | - | 9 | - | - | - | - | - | 15 | - | - | - | - | - | SALEABLE | |
| | | | | | | | | | - | - | 18 | - | - | - | - | - | 24 | 25 | - | - | - | - | 30 | - | - | - | - | - | | |
| | | | | | | | | | - | - | - | - | - | - | - | - | - | - | - | - | - | - | 45 | | | | | | | |
| | | | | | | | | | - | 47 | 48 | - | - | - | - | - | - | - | 56 | - | - | - | - | - | 87 | 88 | - | - | | |
| | | | | | | | | | - | - | - | 64 | 65 | - | - | 68 | 69 | 70 | - | 72 | 73 | 74 | 75 | - | - | - | - | - | | |
| GPEC RCPT CONN 95 CKT END LVR KEY 1/77 | 349920023 | 1-BLACK | IH | PLR | LE | LA | M | R | - | - | - | - | - | - | - | - | 9 | - | - | - | - | - | 15 | - | - | - | - | - | SALEABLE | |
| | | | | | | | | | - | - | 18 | - | - | - | - | - | 24 | 25 | - | - | - | - | 30 | - | - | - | - | - | | |
| | | | | | | | | | - | - | - | - | - | - | - | - | - | - | - | - | - | - | 45 | | | | | | | |
| | | | | | | | | | - | - | - | - | - | - | - | - | - | - | - | - | - | - | - | - | 87 | 88 | - | - | | |
| | | | | | | | | | - | - | - | 64 | 65 | - | - | 68 | 69 | 70 | - | 72 | 73 | 74 | 75 | - | - | - | - | - | | |
| GPEC RCPT CONN 95 CKT END LVR KEY 1/60 | 349920024 | 1-BLACK | IH | PLR | LE | LA | M | R | - | - | 3 | 4 | - | - | - | - | - | - | - | - | - | - | - | - | - | - | 79 | - | SALEABLE | |
| | | | | | | | | | - | - | - | 19 | 20 | - | 22 | - | 24 | 25 | 26 | - | - | - | - | 81 | - | - | - | - | | |
| | | | | | | | | | 31 | 32 | - | 34 | 35 | 36 | 37 | - | 39 | - | - | 42 | 43 | 44 | - | | | | | | | |
| | | | | | | | | | 46 | - | - | 49 | - | 51 | - | - | - | - | - | 57 | - | - | - | 86 | 87 | 88 | - | - | | |
| | | | | | | | | | - | - | - | - | - | 66 | 67 | - | 69 | 70 | 71 | - | 73 | 74 | - | - | 92 | - | - | - | | |
| GPEC RCPT CONN 95 CKT END LVR KEY 1/67 | 349920025 | 1-BLACK | IH | PLR | LE | LA | M | R | - | - | - | - | - | - | - | - | - | - | - | - | - | - | - | - | - | - | - | SALEABLE | |
| | | | | | | | | | - | - | - | - | 20 | - | 22 | - | 24 | 25 | 26 | - | - | - | - | 81 | - | - | - | - | | |
| | | | | | | | | | 31 | 32 | - | - | 35 | 36 | 37 | - | 39 | - | - | 42 | 43 | 44 | - | | | | | | | |
| | | | | | | | | | 46 | - | - | 49 | - | 51 | - | - | - | - | - | 57 | - | - | - | 86 | 87 | 88 | - | - | | |
| | | | | | | | | | - | - | - | - | - | 66 | 67 | - | - | - | 71 | - | 73 | 74 | - | - | 92 | - | - | - | | |
| GPEC RCPT CONN 95 CKT END LVR KEY 1/82 | 349920026 | 1-BLACK | IH | PLR | LE | LA | M | R | 1 | - | - | - | - | - | - | - | - | - | - | - | - | - | - | - | - | 78 | - | - | SALEABLE | |
| | | | | | | | | | 16 | - | - | - | - | - | 22 | - | - | - | - | - | - | - | - | - | - | 83 | - | - | | |
| | | | | | | | | | - | - | - | - | - | - | - | - | - | - | - | - | - | - | - | | | | | | | |
| | | | | | | | | | - | - | - | - | - | - | - | - | - | 55 | 56 | - | - | - | - | - | - | - | - | - | | |
| | | | | | | | | | - | 62 | 63 | 64 | - | - | 67 | 68 | 69 | - | - | - | - | - | - | - | - | - | - | - | | |
| GPEC RCPT CONN 95 CKT END LVR KEY 1/68 | 349920027 | 1-BLACK | IH | PLR | LE | LA | M | R | - | - | 3 | - | - | - | - | - | 9 | 10 | - | 12 | - | - | 15 | - | - | - | - | - | SALEABLE | |
| | | | | | | | | | - | - | 18 | - | - | - | - | - | 24 | 25 | - | - | - | - | 30 | - | - | 83 | - | - | | |
| | | | | | | | | | 31 | - | - | - | - | - | - | - | - | - | - | - | - | - | 45 | | | | | | | |
| | | | | | | | | | - | 47 | 48 | - | - | - | - | - | - | - | 56 | - | - | - | - | - | 87 | 88 | - | - | | |
| | | | | | | | | | - | - | - | 64 | 65 | - | - | 68 | 69 | 70 | 71 | 72 | 73 | 74 | 75 | - | - | - | - | - | | |

molex

# GPEC IV 95 WAY RECEPTACLE SEALED ASSEMBLY MAT SEAL

## BOM AND PIN OUT SHEET

| ASSEMBLY DESCRIPTION | ASSEMBLY PART NUMBER | COMPONENT<br>THE PRESENCE OF AN ABBREVIATION INDICATES THE PRESENCE OF THAT COMPONENT. | | | | | | | BLOCKED TERMINALS<br>CAVITY WITH A NUMBER INDICATES BLOCKED TERMINAL POSITION<br>CAVITY WITHOUT A NUMBER INDICATES OPEN TERMINAL POSITION | | | | | | | | | | | | | | | | | | | | STATUS | COMMENTS |
|---|---|---|---|---|---|---|---|---|---|---|---|---|---|---|---|---|---|---|---|---|---|---|---|---|---|---|---|---|---|
| | | OUTER HOUSING KEY/COLOR | INNER HOUSING | PLR | LEVER | LEVER ARM (x/2) | MAT SEAL | RING SEAL | | | | | | | | | | | | | | | | | | | | | |
| GPEC RCPT CONN 95 CKT END LVR KEY 1/85 | 349920028 | 1-BLACK | IH | PLR | LE | LA | M | R | - | - | - | - | - | - | - | - | - | - | - | - | - | - | - | - | - | - | - | SALEABLE | |
| | | | | | | | | | - | - | - | - | - | - | 22 | - | 24 | - | - | - | - | - | - | - | - | - | - | | |
| | | | | | | | | | - | - | - | - | - | - | - | - | 39 | - | - | 42 | 43 | 44 | - | | | | | | |
| | | | | | | | | | - | - | - | - | - | - | - | - | - | - | - | - | - | - | - | - | - | - | - | | |
| | | | | | | | | | - | - | - | - | - | 66 | 67 | - | - | - | - | - | 73 | 74 | - | - | - | - | - | | |
| GPEC RCPT CONN 95 CKT END LVR KEY 1/68 | 349920029 | 1-BLACK | IH | PLR | LE | LA | M | R | - | - | 3 | - | - | - | - | - | 9 | 10 | - | 12 | - | - | 15 | - | - | 78 | - | - | SALEABLE | |
| | | | | | | | | | - | - | 18 | - | - | - | - | - | 24 | 25 | - | - | - | - | 30 | - | - | 83 | - | - | | |
| | | | | | | | | | 31 | - | - | - | - | - | - | - | - | - | - | - | - | - | 45 | | | | | | |
| | | | | | | | | | - | 47 | 48 | - | - | - | - | - | - | - | 56 | - | - | - | - | 87 | 88 | - | - | | |
| | | | | | | | | | - | - | - | 64 | 65 | - | - | 68 | 69 | 70 | - | 72 | 73 | 74 | 75 | - | - | - | - | - | | |
| GPEC RCPT CONN 95 CKT END LVR KEY 1/69 | 349920030 | 1-BLACK | IH | PLR | LE | LA | M | R | - | - | - | - | - | - | - | - | - | - | - | - | - | - | - | - | - | - | - | SALEABLE | |
| | | | | | | | | | - | - | - | - | 20 | - | 22 | - | 24 | 25 | 26 | - | - | - | - | 81 | - | - | - | - | | |
| | | | | | | | | | 31 | 32 | - | - | 35 | 36 | 37 | - | 39 | - | - | 42 | 43 | 44 | - | | | | | | |
| | | | | | | | | | 46 | - | - | 49 | - | 51 | - | - | - | - | - | 57 | - | - | - | 86 | 87 | 88 | - | - | | |
| | | | | | | | | | - | - | - | - | - | 66 | 67 | - | - | - | - | - | 73 | 74 | - | - | - | - | - | - | | |
| GPEC RCPT CONN 95 CKT END LVR KEY 1/83 | 349920031 | 1-BLACK | IH | PLR | LE | LA | M | R | - | - | - | - | - | - | - | - | - | - | - | - | - | - | - | - | - | - | - | SALEABLE | |
| | | | | | | | | | - | - | - | - | - | - | - | - | 24 | - | - | - | - | - | - | - | - | - | - | | |
| | | | | | | | | | - | - | - | - | - | - | - | - | - | - | - | - | - | - | - | | | | | | |
| | | | | | | | | | - | - | 48 | - | - | - | - | - | - | - | 56 | - | - | - | - | - | 87 | 88 | - | - | | |
| | | | | | | | | | - | - | - | 64 | 65 | - | - | 68 | - | - | - | 72 | 73 | 74 | 75 | - | - | - | - | - | | |
| GPEC RCPT CONN 95 CKT TOP LVR KEY 1/95 | 349921001 | 1-BLACK | IH | PLR | LT | LA | M | R | - | - | - | - | - | - | - | - | - | - | - | - | - | - | - | - | - | - | - | SALEABLE | |
| | | | | | | | | | - | - | - | - | - | - | - | - | - | - | - | - | - | - | - | - | - | - | - | | |
| | | | | | | | | | - | - | - | - | - | - | - | - | - | - | - | - | - | - | - | | | | | | |
| | | | | | | | | | - | - | - | - | - | - | - | - | - | - | - | - | - | - | - | - | - | - | - | | |
| | | | | | | | | | - | - | - | - | - | - | - | - | - | - | - | - | - | - | - | - | - | - | - | | |
| GPEC RCPT CONN 95 CKT TOP LVR KEY 1/0 | 349921002 | 1-BLACK | IH | PLR | LT | LA | M | R | 1 | 2 | 3 | 4 | 5 | 6 | 7 | 8 | 9 | 10 | 11 | 12 | 13 | 14 | 15 | 76 | 77 | 78 | 79 | 80 | SALEABLE | |
| | | | | | | | | | 16 | 17 | 18 | 19 | 20 | 21 | 22 | 23 | 24 | 25 | 26 | 27 | 28 | 29 | 30 | 81 | 82 | 83 | 84 | 85 | | |
| | | | | | | | | | 31 | 32 | 33 | 34 | 35 | 36 | 37 | 38 | 39 | 40 | 41 | 42 | 43 | 44 | 45 | | | | | | | |
| | | | | | | | | | 46 | 47 | 48 | 49 | 50 | 51 | 52 | 53 | 54 | 55 | 56 | 57 | 58 | 59 | 60 | 86 | 87 | 88 | 89 | 90 | | |
| | | | | | | | | | 61 | 62 | 63 | 64 | 65 | 66 | 67 | 68 | 69 | 70 | 71 | 72 | 73 | 74 | 75 | 91 | 92 | 93 | 94 | 95 | | |
| GPEC RCPT CONN 95 CKT TOP LVR KEY 1/47 | 349921003 | 1-BLACK | IH | PLR | LT | LA | M | R | - | - | 3 | 4 | 5 | - | - | - | 9 | - | - | 12 | 13 | - | 15 | - | 77 | 78 | 79 | 80 | SALEABLE | |
| | | | | | | | | | 16 | 17 | 18 | - | 20 | 21 | - | 23 | 24 | 25 | 26 | - | 28 | - | 30 | - | - | - | - | 85 | | |
| | | | | | | | | | - | - | - | - | - | - | - | 38 | - | - | - | - | 43 | 44 | 45 | | | | | | | |
| | | | | | | | | | 46 | 47 | - | 49 | - | 51 | - | 53 | 54 | - | 56 | - | - | 59 | - | 86 | - | - | - | - | | |
| | | | | | | | | | 61 | - | - | - | - | 66 | 67 | 68 | 69 | 70 | 71 | - | 73 | 74 | - | 91 | - | - | 94 | 95 | | |
| GPEC RCPT CONN 95 CKT TOP LVR KEY 1/77 | 349921004 | 1-BLACK | IH | PLR | LT | LA | M | R | - | - | - | - | - | - | - | - | 9 | - | - | - | - | - | 15 | - | - | - | - | - | SALEABLE | |
| | | | | | | | | | - | - | 18 | - | - | - | - | - | 24 | 25 | - | - | - | - | 30 | - | - | - | - | - | | |
| | | | | | | | | | - | - | - | - | - | - | - | - | - | - | - | - | - | - | 45 | | | | | | | |
| | | | | | | | | | - | - | - | - | - | - | - | - | - | - | - | - | - | - | - | - | 87 | 88 | - | - | | |
| | | | | | | | | | - | - | - | 64 | 65 | - | - | 68 | 69 | 70 | - | 72 | 73 | 74 | 75 | - | - | - | - | - | | |
| GPEC RCPT CONN 95 CKT TOP LVR KEY 1/68 | 349921005 | 1-BLACK | IH | PLR | LT | LA | M | R | - | - | 3 | - | - | - | - | - | 9 | 10 | - | 12 | - | - | 15 | - | - | 78 | - | - | SALEABLE | |
| | | | | | | | | | - | - | 18 | - | - | - | - | - | 24 | 25 | - | - | - | - | 30 | - | - | 83 | - | - | | |
| | | | | | | | | | 31 | - | - | - | - | - | - | - | - | - | - | - | - | - | 45 | | | | | | | |
| | | | | | | | | | - | 47 | 48 | - | - | - | - | - | - | - | 56 | - | - | - | - | 87 | 88 | - | - | | |
| | | | | | | | | | - | - | - | 64 | 65 | - | - | 68 | 69 | 70 | - | 72 | 73 | 74 | 75 | - | - | - | - | - | | |
| GPEC RCPT CONN 95 CKT TOP LVR KEY 1/65 | 349921006 | 1-BLACK | IH | PLR | LT | LA | M | R | - | - | 3 | - | - | - | - | - | 9 | 10 | - | 12 | - | - | 15 | - | - | 78 | - | - | SALEABLE | |
| | | | | | | | | | - | - | 18 | - | - | - | - | - | 24 | 25 | - | - | - | - | 30 | - | - | 83 | - | - | | |
| | | | | | | | | | 31 | - | - | - | - | - | - | - | - | - | - | - | - | - | 45 | | | | | | | |
| | | | | | | | | | 46 | 47 | 48 | - | - | - | - | - | - | - | 56 | - | - | - | - | 87 | 88 | - | - | | |
| | | | | | | | | | 61 | - | - | 64 | 65 | - | - | 68 | 69 | 70 | 71 | 72 | 73 | 74 | 75 | - | - | - | - | - | | |

molex

# GPEC IV 95 WAY RECEPTACLE SEALED ASSEMBLY MAT SEAL

## BOM AND PIN OUT SHEET

| ASSEMBLY DESCRIPTION | ASSEMBLY PART NUMBER | COMPONENT<br>THE PRESENCE OF AN ABBREVIATION INDICATES THE PRESENCE OF THAT COMPONENT. | | | | | | | BLOCKED TERMINALS<br>CAVITY WITH A NUMBER INDICATES BLOCKED TERMINAL POSITION<br>CAVITY WITHOUT A NUMBER INDICATES OPEN TERMINAL POSITION | | | | | | | | | | | | | | | | | | | | STATUS | COMMENTS |
|---|---|---|---|---|---|---|---|---|---|---|---|---|---|---|---|---|---|---|---|---|---|---|---|---|---|---|---|---|---|
| | | OUTER HOUSING KEY/COLOR | INNER HOUSING | PLR | LEVER | LEVER ARM (x/2) | MAT SEAL | RING SEAL | | | | | | | | | | | | | | | | | | | | | |
| GPEC RCPT CONN 95 CKT TOP LVR KEY 1/68 | 349921007 | 1-BLACK | IH | PLR | LT | LA | M | R | - | - | 3 | - | - | - | - | - | 9 | 10 | - | 12 | - | - | 15 | - | - | 78 | - | - | SALEABLE | |
| | | | | | | | | | - | - | 18 | - | - | - | - | - | 24 | - | - | - | - | - | - | - | - | 83 | - | - | | |
| | | | | | | | | | 31 | - | - | - | - | - | - | - | - | - | - | - | - | - | - | | | | | | | |
| | | | | | | | | | 46 | 47 | 48 | - | - | - | - | - | - | - | 56 | - | - | - | - | - | 87 | 88 | - | - | | |
| | | | | | | | | | 61 | - | - | 64 | 65 | - | - | 68 | 69 | 70 | 71 | 72 | 73 | 74 | 75 | - | - | - | - | - | | |
| GPEC RCPT CONN 95 CKT END LVR KEY 2/95 | 349922001 | 2-BLACK | IH | PLR | LE | LA | M | R | - | - | - | - | - | - | - | - | - | - | - | - | - | - | - | - | - | - | - | - | SALEABLE | |
| | | | | | | | | | - | - | - | - | - | - | - | - | - | - | - | - | - | - | - | - | - | - | - | - | | |
| | | | | | | | | | - | - | - | - | - | - | - | - | - | - | - | - | - | - | - | | | | | | | |
| | | | | | | | | | - | - | - | - | - | - | - | - | - | - | - | - | - | - | - | - | - | - | - | - | | |
| | | | | | | | | | - | - | - | - | - | - | - | - | - | - | - | - | - | - | - | - | - | - | - | - | | |
| GPEC RCPT CONN 95 CKT TOP LVR KEY 2/95 | 349923001 | 2-BLACK | IH | PLR | LT | LA | M | R | - | - | - | - | - | - | - | - | - | - | - | - | - | - | - | - | - | - | - | - | SALEABLE | |
| | | | | | | | | | - | - | - | - | - | - | - | - | - | - | - | - | - | - | - | - | - | - | - | - | | |
| | | | | | | | | | - | - | - | - | - | - | - | - | - | - | - | - | - | - | - | | | | | | | |
| | | | | | | | | | - | - | - | - | - | - | - | - | - | - | - | - | - | - | - | - | - | - | - | - | | |
| | | | | | | | | | - | - | - | - | - | - | - | - | - | - | - | - | - | - | - | - | - | - | - | - | | |
| GPEC RCPT CONN 95 CKT TOP LVR KEY 2/46 | 349923002 | 2-BLACK | IH | PLR | LT | LA | M | R | - | - | - | 4 | - | 6 | - | 8 | 9 | - | 11 | - | - | 14 | 15 | - | 77 | - | - | 80 | SALEABLE | |
| | | | | | | | | | - | 17 | - | - | - | 21 | - | - | 24 | - | - | - | 28 | 29 | 30 | 81 | - | 83 | - | 85 | | |
| | | | | | | | | | - | 32 | - | - | - | - | - | - | - | - | 41 | - | 43 | 44 | 45 | | | | | | | |
| | | | | | | | | | 46 | - | 48 | - | - | - | - | 53 | - | - | 56 | 57 | 58 | - | - | 86 | 87 | 88 | - | 90 | | |
| | | | | | | | | | 61 | 62 | 63 | 64 | 65 | 66 | 67 | 68 | 69 | 70 | 71 | 72 | 73 | 74 | 75 | - | - | - | - | 95 | | |
| GPEC RCPT CONN 95 CKT END LVR KEY 3/95 | 349924001 | 3-BLACK | IH | PLR | LE | LA | M | R | - | - | - | - | - | - | - | - | - | - | - | - | - | - | - | - | - | - | - | - | SALEABLE | |
| | | | | | | | | | - | - | - | - | - | - | - | - | - | - | - | - | - | - | - | - | - | - | - | - | | |
| | | | | | | | | | - | - | - | - | - | - | - | - | - | - | - | - | - | - | - | | | | | | | |
| | | | | | | | | | - | - | - | - | - | - | - | - | - | - | - | - | - | - | - | - | - | - | - | - | | |
| | | | | | | | | | - | - | - | - | - | - | - | - | - | - | - | - | - | - | - | - | - | - | - | - | | |
| GPEC RCPT CONN 95 CKT END LVR KEY 3/61 | 349924002 | 3-BLACK | IH | PLR | LE | LA | M | R | - | - | - | - | - | - | - | - | - | - | - | - | - | - | - | - | - | - | - | - | SALEABLE | |
| | | | | | | | | | - | - | - | - | - | 21 | - | 23 | - | 25 | 26 | - | - | - | - | - | - | - | - | - | | |
| | | | | | | | | | - | 32 | 33 | - | - | - | - | - | 39 | - | 41 | - | - | - | - | | | | | | | |
| | | | | | | | | | - | - | 48 | 49 | 50 | 51 | 52 | - | - | - | - | - | 58 | - | 60 | - | - | 88 | 89 | - | | |
| | | | | | | | | | 61 | 62 | 63 | 64 | 65 | 66 | 67 | 68 | 69 | 70 | 71 | 72 | 73 | 74 | 75 | - | - | 93 | 94 | - | | |
| GPEC RCPT CONN 95 CKT END LVR KEY 3/49 | 349924003 | 3-BLACK | IH | PLR | LE | LA | M | R | - | - | - | 4 | - | - | - | - | - | - | - | - | - | - | - | - | - | - | - | - | SALEABLE | |
| | | | | | | | | | - | - | - | 19 | - | 21 | - | 23 | 24 | 25 | 26 | - | - | - | - | - | - | - | - | - | | |
| | | | | | | | | | - | 32 | 33 | - | 35 | - | 37 | - | 39 | - | 41 | - | 43 | 44 | - | | | | | | | |
| | | | | | | | | | - | - | 48 | 49 | 50 | 51 | 52 | 53 | - | 55 | 56 | - | 58 | - | 60 | - | 87 | 88 | 89 | - | | |
| | | | | | | | | | 61 | 62 | 63 | 64 | 65 | 66 | 67 | 68 | 69 | 70 | 71 | 72 | 73 | 74 | 75 | - | 92 | 93 | 94 | - | | |
| GPEC RCPT CONN 95 CKT TOP LVR KEY 3/95 | 349925001 | 3-BLACK | IH | PLR | LT | LA | M | R | - | - | - | - | - | - | - | - | - | - | - | - | - | - | - | - | - | - | - | - | SALEABLE | |
| | | | | | | | | | - | - | - | - | - | - | - | - | - | - | - | - | - | - | - | - | - | - | - | - | | |
| | | | | | | | | | - | - | - | - | - | - | - | - | - | - | - | - | - | - | - | | | | | | | |
| | | | | | | | | | - | - | - | - | - | - | - | - | - | - | - | - | - | - | - | - | - | - | - | - | | |
| | | | | | | | | | - | - | - | - | - | - | - | - | - | - | - | - | - | - | - | - | - | - | - | - | | |
| GPEC RCPT CONN 95 CKT TOP LVR KEY 3/80 | 349925002 | 3-BLACK | IH | PLR | LT | LA | M | R | - | - | - | - | - | - | - | - | - | - | - | - | - | - | - | - | - | - | - | - | SALEABLE | |
| | | | | | | | | | - | - | - | - | - | - | - | - | - | - | - | - | - | - | - | - | - | - | - | - | | |
| | | | | | | | | | - | - | - | - | - | - | - | - | - | - | - | - | - | - | - | | | | | | | |
| | | | | | | | | | - | - | - | - | - | - | - | - | - | - | - | - | - | - | - | - | - | - | - | - | | |
| | | | | | | | | | 61 | 62 | 63 | 64 | 65 | 66 | 67 | 68 | 69 | 70 | 71 | 72 | 73 | 74 | 75 | - | - | - | - | - | | |
| GPEC RCPT CONN 95 CKT TOP LVR KEY 3/69 | 349925003 | 3-BLACK | IH | PLR | LT | LA | M | R | - | - | - | 4 | 5 | - | - | 8 | - | - | - | - | - | 14 | 15 | - | 77 | - | 79 | - | SALEABLE | |
| | | | | | | | | | - | 17 | - | 19 | - | - | - | 23 | - | 25 | 26 | - | 28 | - | 30 | - | - | - | - | - | | |
| | | | | | | | | | - | - | - | - | - | - | - | - | - | - | - | - | - | - | - | | | | | | | |
| | | | | | | | | | 46 | - | - | 49 | - | - | - | - | - | - | 56 | - | 58 | 59 | - | - | - | - | - | - | | |
| | | | | | | | | | - | - | - | 64 | - | - | 67 | - | 69 | - | - | - | 73 | - | 75 | 91 | 92 | - | - | - | | |

molex

# GPEC IV 95 WAY RECEPTACLE SEALED ASSEMBLY MAT SEAL

## BOM AND PIN OUT SHEET

| ASSEMBLY DESCRIPTION | ASSEMBLY PART NUMBER | COMPONENT<br>THE PRESENCE OF AN ABBREVIATION INDICATES THE PRESENCE OF THAT COMPONENT. | | | | | | | BLOCKED TERMINALS<br>CAVITY WITH A NUMBER INDICATES BLOCKED TERMINAL POSITION<br>CAVITY WITHOUT A NUMBER INDICATES OPEN TERMINAL POSITION | | | | | | | | | | | | | | | | | | | | STATUS | COMMENTS |
|---|---|---|---|---|---|---|---|---|---|---|---|---|---|---|---|---|---|---|---|---|---|---|---|---|---|---|---|---|---|
| | | OUTER HOUSING KEY/COLOR | INNER HOUSING | PLR | LEVER | LEVER ARM (x/2) | MAT SEAL | RING SEAL | | | | | | | | | | | | | | | | | | | | | |
| GPEC RCPT CONN 95 CKT TOP LVR KEY 3/69 | 349925004 | 3-BLACK | IH | PLR | LT | LA | M | R | - | - | - | 4 | 5 | - | - | 8 | - | - | - | - | - | 14 | 15 | | - | 77 | - | 79 | - | SALEABLE | |
| | | | | | | | | | - | 17 | - | 19 | - | - | - | 23 | - | 25 | 26 | - | 28 | - | - | | - | - | - | - | - | | |
| | | | | | | | | | - | - | - | - | - | - | - | - | - | - | - | - | - | - | - | | | | | | | | |
| | | | | | | | | | 46 | - | - | 49 | - | - | - | - | - | - | 56 | 57 | 58 | 59 | - | | - | - | - | - | - | | |
| | | | | | | | | | - | - | - | 64 | - | - | 67 | - | 69 | - | - | - | 73 | - | 75 | | 91 | 92 | - | - | - | | |
| GPEC RCPT CONN 95 CKT TOP LVR KEY 3/68 | 349925005 | 3-BLACK | IH | PLR | LT | LA | M | R | - | - | - | 4 | 5 | - | - | 8 | - | - | - | - | - | 14 | 15 | | - | 77 | - | 79 | - | SALEABLE | |
| | | | | | | | | | - | 17 | - | 19 | - | - | - | 23 | - | 25 | 26 | - | 28 | - | 30 | | - | - | - | - | - | | |
| | | | | | | | | | - | - | - | - | - | - | - | - | - | - | - | - | - | - | - | | | | | | | | |
| | | | | | | | | | 46 | - | - | 49 | - | - | - | - | - | - | 56 | 57 | 58 | 59 | - | | - | - | - | - | - | | |
| | | | | | | | | | - | - | - | 64 | - | - | 67 | - | 69 | - | - | - | 73 | - | 75 | | 91 | 92 | - | - | - | | |
| GPEC RCPT CONN 95 CKT TOP LVR KEY 3/49 | 349925006 | 3-BLACK | IH | PLR | LT | LA | M | R | - | - | - | 4 | 5 | - | - | 8 | - | - | - | - | - | 14 | 15 | | - | 77 | 78 | 79 | - | SALEABLE | |
| | | | | | | | | | 16 | 17 | 18 | 19 | 20 | 21 | 22 | 23 | - | 25 | 26 | - | 28 | 29 | 30 | | 81 | - | - | - | - | | |
| | | | | | | | | | - | - | - | - | - | - | - | - | - | 40 | - | - | - | - | - | | | | | | | | |
| | | | | | | | | | 46 | - | 48 | 49 | - | 51 | - | - | 54 | 55 | 56 | 57 | 58 | 59 | - | | 86 | - | - | - | - | | |
| | | | | | | | | | 61 | - | - | 64 | - | 66 | 67 | 68 | 69 | 70 | 71 | 72 | - | - | 75 | | 91 | 92 | - | - | - | | |
| GPEC RCPT CONN 95 CKT TOP LVR KEY 3/47 | 349925007 | 3-BLACK | IH | PLR | LT | LA | M | R | - | - | 3 | 4 | 5 | - | - | 8 | - | - | - | - | - | 14 | 15 | | 76 | 77 | 78 | 79 | - | SALEABLE | |
| | | | | | | | | | 16 | 17 | 18 | 19 | 20 | 21 | 22 | 23 | - | 25 | 26 | - | 28 | 29 | 30 | | 81 | - | - | - | - | | |
| | | | | | | | | | - | - | - | - | - | - | - | - | - | 40 | - | - | - | - | - | | | | | | | | |
| | | | | | | | | | 46 | 47 | 48 | 49 | - | 51 | - | - | 54 | 55 | 56 | 57 | - | 59 | - | | 86 | - | - | - | - | | |
| | | | | | | | | | 61 | - | - | - | - | 66 | 67 | 68 | - | 70 | - | 72 | 73 | 74 | 75 | | 91 | 92 | 93 | - | - | | |
| GPEC RCPT CONN 95 CKT TOP LVR KEY 3/57 | 349925008 | 3-BLACK | IH | PLR | LT | LA | M | R | - | - | - | - | - | - | - | - | - | - | - | - | - | - | - | | - | - | - | - | - | SALEABLE | |
| | | | | | | | | | - | - | - | - | - | 21 | - | 23 | - | 25 | 26 | - | - | - | - | | - | - | - | - | - | | |
| | | | | | | | | | - | 32 | 33 | - | - | - | - | - | 39 | - | 41 | - | 43 | 44 | - | | | | | | | | |
| | | | | | | | | | - | - | 48 | 49 | 50 | 51 | 52 | - | - | 55 | 56 | - | 58 | - | 60 | | - | - | 88 | 89 | - | | |
| | | | | | | | | | 61 | 62 | 63 | 64 | 65 | 66 | 67 | 68 | 69 | 70 | 71 | 72 | 73 | 74 | 75 | | - | - | 93 | 94 | - | | |
| GPEC RCPT CONN 95 CKT TOP LVR KEY 3/53 | 349925009 | 3-BLACK | IH | PLR | LT | LA | M | R | - | - | - | 4 | - | - | - | - | - | - | - | - | - | - | - | | - | - | - | - | - | SALEABLE | |
| | | | | | | | | | - | - | - | - | - | 21 | - | 23 | - | 25 | 26 | - | - | - | - | | - | - | - | - | - | | |
| | | | | | | | | | - | 32 | 33 | - | - | - | 37 | - | 39 | - | 41 | - | 43 | 44 | - | | | | | | | | |
| | | | | | | | | | - | - | 48 | 49 | 50 | 51 | 52 | - | - | 55 | 56 | - | 58 | - | 60 | | - | 87 | 88 | 89 | - | | |
| | | | | | | | | | 61 | 62 | 63 | 64 | 65 | 66 | 67 | 68 | 69 | 70 | 71 | 72 | 73 | 74 | 75 | | - | 92 | 93 | 94 | - | | |
| GPEC RCPT CONN 95 CKT TOP LVR KEY 3/44 | 349925010 | 3-BLACK | IH | PLR | LT | LA | M | R | - | - | - | 4 | 5 | - | 7 | 8 | - | - | - | 12 | 13 | 14 | 15 | | - | 77 | 78 | 79 | - | SALEABLE | |
| | | | | | | | | | 16 | 17 | 18 | 19 | 20 | 21 | - | 23 | 24 | 25 | 26 | - | 28 | 29 | 30 | | 81 | - | - | - | - | | |
| | | | | | | | | | - | - | - | - | - | - | - | - | - | - | - | - | - | - | - | | | | | | | | |
| | | | | | | | | | 46 | 47 | - | 49 | - | 51 | 52 | 53 | 54 | 55 | 56 | 57 | 58 | 59 | 60 | | 86 | - | - | - | - | | |
| | | | | | | | | | 61 | - | - | - | - | 66 | 67 | 68 | 69 | 70 | 71 | - | 73 | 74 | 75 | | 91 | 92 | - | - | - | | |
| GPEC RCPT CONN 95 CKT TOP LVR KEY 3/50 | 349925011 | 3-BLACK | IH | PLR | LT | LA | M | R | - | - | - | 4 | 5 | - | - | 8 | - | - | - | - | - | 14 | 15 | | - | 77 | 78 | 79 | - | SALEABLE | |
| | | | | | | | | | 16 | 17 | 18 | 19 | 20 | 21 | 22 | 23 | - | 25 | 26 | - | 28 | 29 | 30 | | 81 | - | - | - | - | | |
| | | | | | | | | | - | - | - | - | - | - | - | - | - | 40 | - | - | - | - | - | | | | | | | | |
| | | | | | | | | | 46 | - | 48 | - | - | 51 | - | - | 54 | 55 | 56 | 57 | 58 | 59 | - | | 86 | - | - | - | - | | |
| | | | | | | | | | 61 | - | - | 64 | - | 66 | 67 | 68 | 69 | 70 | 71 | 72 | - | - | 75 | | 91 | 92 | - | - | - | | |
| GPEC RCPT CONN 95 CKT END LVR KEY 4/95 | 349926001 | 4-BLACK | IH | PLR | LE | LA | M | R | - | - | - | - | - | - | - | - | - | - | - | - | - | - | - | | - | - | - | - | - | SALEABLE | |
| | | | | | | | | | - | - | - | - | - | - | - | - | - | - | - | - | - | - | - | | - | - | - | - | - | | |
| | | | | | | | | | - | - | - | - | - | - | - | - | - | - | - | - | - | - | - | | | | | | | | |
| | | | | | | | | | - | - | - | - | - | - | - | - | - | - | - | - | - | - | - | | - | - | - | - | - | | |
| | | | | | | | | | - | - | - | - | - | - | - | - | - | - | - | - | - | - | - | | - | - | - | - | - | | |
| GPEC RCPT CONN 95 CKT END LVR KEY 4/72 | 349926002 | 4-BLACK | IH | PLR | LE | LA | M | R | - | - | 3 | - | - | 6 | 7 | - | 9 | - | - | - | - | - | 15 | | - | - | - | - | - | SALEABLE | |
| | | | | | | | | | - | - | - | - | 20 | 21 | 22 | - | - | - | - | - | - | - | - | | - | - | - | - | 85 | | |
| | | | | | | | | | - | - | - | 34 | 35 | 36 | 37 | 38 | 39 | - | - | - | - | - | - | | | | | | | | |
| | | | | | | | | | 46 | 47 | 48 | 49 | - | - | - | - | - | - | 56 | - | - | - | - | | 86 | - | - | - | - | | |
| | | | | | | | | | - | - | 63 | - | - | - | - | - | 69 | - | - | - | - | - | - | | - | - | - | - | - | | |

molex

# GPEC IV 95 WAY RECEPTACLE SEALED ASSEMBLY MAT SEAL

## BOM AND PIN OUT SHEET

| ASSEMBLY DESCRIPTION | ASSEMBLY PART NUMBER | COMPONENT<br>THE PRESENCE OF AN ABBREVIATION INDICATES THE PRESENCE OF THAT COMPONENT. | | | | | | | BLOCKED TERMINALS<br>CAVITY WITH A NUMBER INDICATES BLOCKED TERMINAL POSITION<br>CAVITY WITHOUT A NUMBER INDICATES OPEN TERMINAL POSITION | | | | | | | | | | | | | | | | | | | | | STATUS | COMMENTS |
|---|---|---|---|---|---|---|---|---|---|---|---|---|---|---|---|---|---|---|---|---|---|---|---|---|---|---|---|---|---|---|
| | | OUTER HOUSING KEY/COLOR | INNER HOUSING | PLR | LEVER | LEVER ARM (x/2) | MAT SEAL | RING SEAL | | | | | | | | | | | | | | | | | | | | | | |
| GPEC RCPT CONN 95 CKT END LVR KEY 4/72 | 349926003 | 4-BLACK | IH | PLR | LE | LA | M | R | - | 2 | - | - | - | 6 | 7 | - | - | - | 11 | 12 | 13 | 14 | - | - | - | - | - | - | SALEABLE | |
| | | | | | | | | | - | - | - | 19 | - | 21 | - | - | - | - | - | 27 | 28 | - | - | - | 82 | - | - | - | | |
| | | | | | | | | | 31 | - | - | - | - | - | - | - | - | - | 41 | - | - | - | 45 | | | | | | | |
| | | | | | | | | | 46 | 47 | - | - | - | - | - | - | - | - | - | - | - | - | - | - | 87 | - | - | - | | |
| | | | | | | | | | 61 | - | - | 64 | - | - | 67 | - | - | - | - | 72 | - | 74 | - | - | - | - | - | - | | |
| GPEC RCPT CONN 95 CKT END LVR KEY 4/63 | 349926004 | 4-BLACK | IH | PLR | LE | LA | M | R | - | 2 | - | - | 5 | 6 | 7 | - | - | - | 11 | 12 | 13 | 14 | - | - | - | 78 | - | - | SALEABLE | |
| | | | | | | | | | - | - | - | 19 | - | 21 | - | - | - | - | - | 27 | 28 | - | - | - | 82 | 83 | - | - | | |
| | | | | | | | | | 31 | - | - | - | 35 | - | - | - | - | - | 41 | - | - | - | 45 | | | | | | | |
| | | | | | | | | | 46 | 47 | - | - | - | - | - | - | - | - | - | 57 | 58 | 59 | - | - | 87 | 88 | - | - | | |
| | | | | | | | | | 61 | - | - | 64 | - | - | 67 | - | - | - | - | 72 | - | 74 | - | - | - | 93 | - | - | | |
| GPEC RCPT CONN 95 CKT TOP LVR KEY 4/95 | 349927001 | 4-BLACK | IH | PLR | LT | LA | M | R | - | - | - | - | - | - | - | - | - | - | - | - | - | - | - | - | - | - | - | - | SALEABLE | |
| | | | | | | | | | - | - | - | - | - | - | - | - | - | - | - | - | - | - | - | - | - | - | - | - | | |
| | | | | | | | | | - | - | - | - | - | - | - | - | - | - | - | - | - | - | - | | | | | | | |
| | | | | | | | | | - | - | - | - | - | - | - | - | - | - | - | - | - | - | - | - | - | - | - | - | | |
| | | | | | | | | | - | - | - | - | - | - | - | - | - | - | - | - | - | - | - | - | - | - | - | - | | |
| GPEC RCPT CONN 95 CKT TOP LVR KEY 4/76 | 349927002 | 4-BLACK | IH | PLR | LT | LA | M | R | - | - | - | - | - | - | - | - | - | - | - | - | - | - | 15 | - | - | - | - | - | SALEABLE | |
| | | | | | | | | | - | 17 | - | - | 20 | - | - | - | - | - | - | - | - | - | - | - | - | - | - | 85 | | |
| | | | | | | | | | - | - | - | - | 35 | 36 | 37 | - | - | - | - | 42 | 43 | - | 45 | | | | | | | |
| | | | | | | | | | 46 | 47 | 48 | 49 | - | - | - | - | - | - | 56 | - | - | - | - | - | - | - | - | - | | |
| | | | | | | | | | - | - | 63 | - | - | - | - | - | 69 | - | - | - | - | - | - | - | - | 93 | 94 | - | | |
| GPEC RCPT CONN 95 CKT TOP LVR KEY 4/50 | 349927003 | 4-BLACK | IH | PLR | LT | LA | M | R | - | - | 3 | 4 | 5 | 6 | - | - | 9 | - | - | 12 | 13 | - | 15 | - | 77 | 78 | 79 | - | SALEABLE | |
| | | | | | | | | | 16 | 17 | 18 | 19 | 20 | 21 | - | 23 | 24 | 25 | 26 | - | 28 | - | 30 | - | - | - | - | - | | |
| | | | | | | | | | - | - | - | - | - | - | - | 38 | - | - | - | - | - | 44 | - | | | | | | | |
| | | | | | | | | | 46 | 47 | - | 49 | - | 51 | - | 53 | 54 | - | 56 | - | - | 59 | - | 86 | - | - | - | - | | |
| | | | | | | | | | 61 | - | - | - | - | 66 | 67 | 68 | 69 | 70 | 71 | - | 73 | 74 | 75 | 91 | - | - | - | - | | |
| GPEC RCPT CONN 95 CKT TOP LVR KEY 4/53 | 349927004 | 4-BLACK | IH | PLR | LT | LA | M | R | - | - | 3 | 4 | 5 | - | - | - | 9 | - | - | - | - | - | 15 | - | 77 | 78 | 79 | - | SALEABLE | |
| | | | | | | | | | 16 | 17 | 18 | 19 | 20 | 21 | - | 23 | 24 | 25 | 26 | - | 28 | - | 30 | - | - | - | - | - | | |
| | | | | | | | | | - | - | - | - | - | - | - | 38 | - | - | - | - | - | 44 | - | | | | | | | |
| | | | | | | | | | 46 | 47 | 48 | 49 | - | 51 | - | - | 54 | - | 56 | - | - | 59 | - | 86 | - | - | - | - | | |
| | | | | | | | | | 61 | - | - | - | - | 66 | 67 | 68 | 69 | 70 | 71 | - | 73 | 74 | 75 | 91 | - | - | - | - | | |
| GPEC RCPT CONN 95 CKT TOP LVR KEY 4/51 | 349927005 | 4-BLACK | IH | PLR | LT | LA | M | R | - | - | 3 | 4 | 5 | - | - | - | 9 | - | - | 12 | 13 | - | 15 | - | 77 | 78 | 79 | - | SALEABLE | |
| | | | | | | | | | 16 | 17 | 18 | 19 | 20 | 21 | - | 23 | 24 | 25 | 26 | - | 28 | - | 30 | - | - | - | - | - | | |
| | | | | | | | | | - | - | - | - | - | - | - | 38 | - | - | - | - | - | 44 | - | | | | | | | |
| | | | | | | | | | 46 | 47 | - | 49 | - | 51 | - | 53 | 54 | - | 56 | - | - | 59 | - | 86 | - | - | - | - | | |
| | | | | | | | | | 61 | - | - | - | - | 66 | 67 | 68 | 69 | 70 | 71 | - | 73 | 74 | 75 | 91 | - | - | - | - | | |
| GPEC RCPT CONN 95 CKT TOP LVR KEY 4/50 | 349927006 | 4-BLACK | IH | PLR | LT | LA | M | R | - | - | 3 | 4 | - | - | - | - | 9 | - | - | 12 | 13 | - | 15 | - | 77 | 78 | 79 | - | SALEABLE | |
| | | | | | | | | | 16 | 17 | 18 | 19 | 20 | 21 | - | 23 | 24 | 25 | 26 | - | 28 | - | 30 | - | - | - | - | - | | |
| | | | | | | | | | - | - | - | - | - | - | - | 38 | - | - | - | - | 43 | 44 | 45 | | | | | | | |
| | | | | | | | | | 46 | 47 | 48 | 49 | - | 51 | - | 53 | 54 | - | 56 | - | - | 59 | - | 86 | - | - | - | - | | |
| | | | | | | | | | 61 | - | - | - | - | 66 | 67 | 68 | 69 | 70 | 71 | - | 73 | 74 | - | 91 | - | - | - | - | | |
| GPEC RCPT CONN 95 CKT TOP LVR KEY 4/54 | 349927007 | 4-BLACK | IH | PLR | LT | LA | M | R | - | - | 3 | 4 | 5 | - | - | - | 9 | - | - | - | - | - | 15 | - | 77 | 78 | 79 | 80 | SALEABLE | |
| | | | | | | | | | 16 | 17 | 18 | 19 | 20 | - | - | 23 | 24 | 25 | 26 | - | 28 | - | - | - | - | - | - | - | | |
| | | | | | | | | | - | - | - | - | - | - | - | 38 | - | - | - | - | - | 44 | - | | | | | | | |
| | | | | | | | | | 46 | 47 | - | 49 | - | 51 | - | - | 54 | - | 56 | - | - | 59 | - | 86 | - | - | - | - | | |
| | | | | | | | | | 61 | - | - | - | - | 66 | 67 | 68 | 69 | 70 | 71 | - | 73 | 74 | 75 | 91 | - | - | - | 95 | | |
| GPEC RCPT CONN 95 CKT TOP LVR KEY 4/46 | 349927008 | 4-BLACK | IH | PLR | LT | LA | M | R | - | - | 3 | 4 | - | - | - | - | 9 | - | - | 12 | 13 | - | 15 | - | 77 | 78 | 79 | 80 | SALEABLE | |
| | | | | | | | | | 16 | 17 | 18 | 19 | 20 | 21 | - | 23 | 24 | 25 | 26 | - | 28 | - | 30 | - | - | - | - | 85 | | |
| | | | | | | | | | - | - | - | - | - | - | - | 38 | - | - | - | - | 43 | 44 | 45 | | | | | | | |
| | | | | | | | | | 46 | 47 | 48 | 49 | - | 51 | - | 53 | 54 | - | 56 | - | - | 59 | - | 86 | - | - | - | - | | |
| | | | | | | | | | 61 | - | - | - | - | 66 | 67 | 68 | 69 | 70 | 71 | - | 73 | 74 | - | 91 | - | - | 94 | 95 | | |

molex

# GPEC IV 95 WAY RECEPTACLE SEALED ASSEMBLY MAT SEAL

## BOM AND PIN OUT SHEET

| ASSEMBLY DESCRIPTION | ASSEMBLY PART NUMBER | COMPONENT<br>THE PRESENCE OF AN ABBREVIATION INDICATES THE PRESENCE OF THAT COMPONENT. | | | | | | | BLOCKED TERMINALS<br>CAVITY WITH A NUMBER INDICATES BLOCKED TERMINAL POSITION<br>CAVITY WITHOUT A NUMBER INDICATES OPEN TERMINAL POSITION | | | | | | | | | | | | | | | | | | | | STATUS | COMMENTS |
|---|---|---|---|---|---|---|---|---|---|---|---|---|---|---|---|---|---|---|---|---|---|---|---|---|---|---|---|---|---|
| | | OUTER HOUSING KEY/COLOR | INNER HOUSING | PLR | LEVER | LEVER ARM (x/2) | MAT SEAL | RING SEAL | | | | | | | | | | | | | | | | | | | | | |
| GPEC RCPT CONN 95 CKT TOP LVR KEY 4/45 | 349927009 | 4-BLACK | IH | PLR | LT | LA | M | R | - | - | 3 | 4 | - | 6 | 7 | 8 | 9 | - | - | 12 | 13 | - | 15 | | - | 77 | 78 | 79 | 80 | SALEABLE | |
| | | | | | | | | | 16 | 17 | 18 | 19 | 20 | - | - | 23 | 24 | 25 | 26 | - | 28 | - | - | | - | - | - | - | 85 | | |
| | | | | | | | | | - | - | - | - | - | - | - | 38 | - | - | 41 | - | 43 | 44 | 45 | | | | | | | | |
| | | | | | | | | | 46 | 47 | 48 | 49 | - | 51 | - | 53 | 54 | - | 56 | - | - | 59 | - | | 86 | - | - | - | - | | |
| | | | | | | | | | 61 | - | - | - | - | 66 | 67 | 68 | - | 70 | 71 | - | 73 | 74 | - | | 91 | - | - | 94 | 95 | | |
| GPEC RCPT CONN 95 CKT TOP LVR KEY 4/42 | 349927010 | 4-BLACK | IH | PLR | LT | LA | M | R | - | - | 3 | 4 | - | 6 | 7 | 8 | 9 | - | - | 12 | 13 | - | 15 | | - | 77 | 78 | 79 | 80 | SALEABLE | |
| | | | | | | | | | 16 | 17 | 18 | 19 | 20 | 21 | - | 23 | 24 | 25 | 26 | - | 28 | - | 30 | | - | - | - | - | 85 | | |
| | | | | | | | | | - | - | - | - | - | - | - | 38 | - | - | 41 | - | 43 | 44 | 45 | | | | | | | | |
| | | | | | | | | | 46 | 47 | 48 | 49 | - | 51 | - | 53 | 54 | - | 56 | - | - | 59 | - | | 86 | - | - | - | - | | |
| | | | | | | | | | 61 | - | - | - | - | 66 | 67 | 68 | 69 | 70 | 71 | - | 73 | 74 | - | | 91 | - | - | 94 | 95 | | |
| GPEC RCPT CONN 95 CKT TOP LVR KEY 4/47 | 349927011 | 4-BLACK | IH | PLR | LT | LA | M | R | - | - | 3 | 4 | 5 | - | - | - | 9 | - | - | 12 | 13 | - | 15 | | - | 77 | 78 | 79 | 80 | SALEABLE | |
| | | | | | | | | | 16 | 17 | 18 | - | 20 | 21 | - | 23 | 24 | 25 | 26 | - | 28 | - | 30 | | - | - | - | - | 85 | | |
| | | | | | | | | | - | - | - | - | - | - | - | 38 | - | - | - | - | 43 | 44 | 45 | | | | | | | | |
| | | | | | | | | | 46 | 47 | - | 49 | - | 51 | - | 53 | 54 | - | 56 | - | - | 59 | - | | 86 | - | - | - | - | | |
| | | | | | | | | | 61 | - | - | - | - | 66 | 67 | 68 | 69 | 70 | 71 | - | 73 | 74 | - | | 91 | - | - | 94 | 95 | | |
| GPEC RCPT CONN 95 CKT TOP LVR KEY 4/52 | 349927012 | 4-BLACK | IH | PLR | LT | LA | M | R | 1 | 2 | 3 | 4 | 5 | 6 | - | - | 9 | - | - | - | - | 14 | 15 | | - | 77 | - | 79 | 80 | SALEABLE | |
| | | | | | | | | | - | 17 | 18 | 19 | 20 | - | - | 23 | 24 | 25 | - | - | 28 | - | - | | - | - | - | - | 85 | | |
| | | | | | | | | | - | - | - | - | - | - | 37 | - | - | - | - | - | - | 44 | - | | | | | | | | |
| | | | | | | | | | 46 | - | 48 | 49 | - | 51 | - | - | - | - | 56 | - | - | 59 | - | | 86 | - | - | - | - | | |
| | | | | | | | | | 61 | - | 63 | 64 | - | 66 | 67 | 68 | 69 | - | 71 | - | - | 74 | 75 | | 91 | 92 | - | - | 95 | | |
| GPEC RCPT CONN 95 CKT TOP LVR KEY 4/47 | 349927013 | 4-BLACK | IH | PLR | LT | LA | M | R | - | - | 3 | 4 | - | - | - | - | 9 | - | - | 12 | 13 | - | 15 | | - | 77 | 78 | 79 | 80 | SALEABLE | |
| | | | | | | | | | 16 | 17 | 18 | - | 20 | 21 | - | 23 | 24 | 25 | 26 | - | 28 | - | 30 | | - | - | - | - | 85 | | |
| | | | | | | | | | - | - | - | - | - | - | - | 38 | - | - | - | - | 43 | 44 | 45 | | | | | | | | |
| | | | | | | | | | 46 | 47 | 48 | 49 | - | 51 | - | 53 | 54 | - | 56 | - | - | 59 | - | | 86 | - | - | - | - | | |
| | | | | | | | | | 61 | - | - | - | - | 66 | 67 | 68 | 69 | 70 | 71 | - | 73 | 74 | - | | 91 | - | - | 94 | 95 | | |
| GPEC RCPT CONN 95 CKT TOP LVR KEY 4/50 | 349927014 | 4-BLACK | IH | PLR | LT | LA | M | R | - | - | 3 | 4 | - | - | - | - | 9 | - | - | 12 | 13 | - | 15 | | - | 77 | 78 | 79 | 80 | SALEABLE | |
| | | | | | | | | | 16 | 17 | 18 | - | 20 | 21 | - | 23 | 24 | 25 | 26 | - | 28 | - | 30 | | - | - | - | - | 85 | | |
| | | | | | | | | | - | - | - | - | - | - | - | 38 | - | - | - | - | 43 | - | - | | | | | | | | |
| | | | | | | | | | 46 | 47 | - | 49 | - | 51 | 52 | 53 | 54 | - | 56 | - | - | 59 | - | | 86 | - | - | - | - | | |
| | | | | | | | | | - | - | - | - | - | 66 | 67 | 68 | 69 | 70 | 71 | - | 73 | 74 | - | | 91 | - | - | 94 | 95 | | |
| GPEC RCPT CONN 95 CKT TOP LVR KEY 4/52 | 349927015 | 4-BLACK | IH | PLR | LT | LA | M | R | 1 | - | 3 | 4 | - | 6 | - | - | 9 | - | - | - | - | - | 15 | | - | - | 78 | 79 | 80 | SALEABLE | |
| | | | | | | | | | 16 | 17 | - | 19 | - | 21 | - | 23 | 24 | 25 | 26 | - | 28 | 29 | 30 | | - | - | - | - | 85 | | |
| | | | | | | | | | - | - | - | - | - | - | - | - | - | - | - | 42 | - | 44 | - | | | | | | | | |
| | | | | | | | | | 46 | - | - | 49 | - | 51 | - | 53 | 54 | 55 | 56 | - | - | 59 | - | | 86 | - | - | - | - | | |
| | | | | | | | | | - | - | - | 64 | - | 66 | 67 | 68 | 69 | 70 | 71 | - | - | 74 | 75 | | 91 | - | - | - | 95 | | |
| GPEC RCPT CONN 95 CKT END LVR KEY 5/95 | 349928001 | 5-BLACK | IH | PLR | LE | LA | M | R | - | - | - | - | - | - | - | - | - | - | - | - | - | - | - | | - | - | - | - | - | SALEABLE | |
| | | | | | | | | | - | - | - | - | - | - | - | - | - | - | - | - | - | - | - | | - | - | - | - | - | | |
| | | | | | | | | | - | - | - | - | - | - | - | - | - | - | - | - | - | - | - | | | | | | | | |
| | | | | | | | | | - | - | - | - | - | - | - | - | - | - | - | - | - | - | - | | - | - | - | - | - | | |
| | | | | | | | | | - | - | - | - | - | - | - | - | - | - | - | - | - | - | - | | - | - | - | - | - | | |
| GPEC RCPT CONN 95 CKT END LVR KEY 5/95 | 349928002 | 5-BLACK | IH | PLR | LE | LA | M | R | - | - | - | - | - | - | - | - | - | - | - | - | - | - | - | | - | - | - | - | - | SALEABLE | |
| | | | | | | | | | - | - | - | - | - | - | - | - | - | - | - | - | - | - | - | | - | - | - | - | - | | |
| | | | | | | | | | - | - | - | - | - | - | - | - | - | - | - | - | - | - | - | | | | | | | | |
| | | | | | | | | | - | - | - | - | - | - | - | - | - | - | - | - | - | - | - | | - | - | - | - | - | | |
| | | | | | | | | | - | - | - | - | - | - | - | - | - | - | - | - | - | - | - | | - | - | - | - | - | | |
| GPEC RCPT CONN 95 CKT END LVR KEY 5/49 | 349928003 | 5-BLACK | IH | PLR | LE | LA | M | R | - | 2 | 3 | 4 | - | - | - | - | - | - | - | - | - | 14 | 15 | | - | - | - | - | - | SALEABLE | |
| | | | | | | | | | - | 17 | 18 | - | 20 | 21 | - | - | 24 | - | 26 | 27 | - | - | 30 | | 81 | - | - | - | 85 | | |
| | | | | | | | | | - | - | 33 | 34 | 35 | - | - | 38 | 39 | - | 41 | - | - | 44 | - | | | | | | | | |
| | | | | | | | | | 46 | 47 | 48 | 49 | 50 | 51 | 52 | 53 | - | - | - | 57 | 58 | - | - | | 86 | 87 | 88 | - | - | | |
| | | | | | | | | | - | 62 | 63 | 64 | 65 | 66 | 67 | 68 | - | 70 | 71 | 72 | - | - | - | | 91 | - | - | - | - | | |

molex

# GPEC IV 95 WAY RECEPTACLE SEALED ASSEMBLY MAT SEAL

## BOM AND PIN OUT SHEET

| ASSEMBLY DESCRIPTION | ASSEMBLY PART NUMBER | COMPONENT<br>THE PRESENCE OF AN ABBREVIATION INDICATES THE PRESENCE OF THAT COMPONENT. | | | | | | | BLOCKED TERMINALS<br>CAVITY WITH A NUMBER INDICATES BLOCKED TERMINAL POSITION<br>CAVITY WITHOUT A NUMBER INDICATES OPEN TERMINAL POSITION | | | | | | | | | | | | | | | | | | | | | STATUS | COMMENTS |
|---|---|---|---|---|---|---|---|---|---|---|---|---|---|---|---|---|---|---|---|---|---|---|---|---|---|---|---|---|---|---|
| | | OUTER HOUSING KEY/COLOR | INNER HOUSING | PLR | LEVER | LEVER ARM (x/2) | MAT SEAL | RING SEAL | | | | | | | | | | | | | | | | | | | | | | |
| GPEC RCPT CONN 95 CKT TOP LVR KEY 5/95 | 349929001 | 5-BLACK | IH | PLR | LT | LA | M | R | - | - | - | - | - | - | - | - | - | - | - | - | - | - | - | - | - | - | - | - | SALEABLE | |
| | | | | | | | | | - | - | - | - | - | - | - | - | - | - | - | - | - | - | - | - | - | - | - | - | | |
| | | | | | | | | | - | - | - | - | - | - | - | - | - | - | - | - | - | | | | | | | | | |
| | | | | | | | | | - | - | - | - | - | - | - | - | - | - | - | - | - | - | - | - | - | - | - | - | | |
| | | | | | | | | | - | - | - | - | - | - | - | - | - | - | - | - | - | - | - | - | - | - | - | - | | |
| GPEC RCPT CONN 95 CKT TOP LVR KEY 5/51 | 349929002 | 5-BLACK | IH | PLR | LT | LA | M | R | - | - | 3 | 4 | - | - | - | - | 9 | - | - | 12 | 13 | - | 15 | - | 77 | 78 | - | 80 | SALEABLE | |
| | | | | | | | | | 16 | 17 | - | 19 | - | 21 | - | 23 | 24 | - | - | - | 28 | 29 | 30 | - | - | - | - | 85 | | |
| | | | | | | | | | - | - | - | - | - | - | - | - | - | - | - | - | - | 44 | - | | | | | | | |
| | | | | | | | | | 46 | 47 | 48 | - | - | 51 | 52 | 53 | 54 | - | 56 | - | - | 59 | 60 | 86 | - | - | - | - | | |
| | | | | | | | | | 61 | - | - | 64 | - | 66 | 67 | 68 | 69 | 70 | 71 | - | 73 | 74 | 75 | 91 | - | - | - | 95 | | |
| GPEC RCPT CONN 95 CKT TOP LVR KEY 5/95 | 349929003 | 5-BLACK | IH | PLR | LT | LA | M | R | - | - | - | - | - | - | - | - | - | - | - | - | - | - | - | - | - | - | - | - | SALEABLE | |
| | | | | | | | | | - | - | - | - | - | - | - | - | - | - | - | - | - | - | - | - | - | - | - | - | | |
| | | | | | | | | | - | - | - | - | - | - | - | - | - | - | - | - | - | - | - | | | | | | | |
| | | | | | | | | | - | - | - | - | - | - | - | - | - | - | - | - | - | - | - | - | - | - | - | - | | |
| | | | | | | | | | - | - | - | - | - | - | - | - | - | - | - | - | - | - | - | - | - | - | - | - | | |
| GPEC RCPT CONN 95 CKT TOP LVR KEY 5/45 | 349929004 | 5-BLACK | IH | PLR | LT | LA | M | R | - | - | 3 | 4 | - | 6 | 7 | 8 | 9 | - | - | 12 | 13 | - | 15 | - | 77 | 78 | - | 80 | SALEABLE | |
| | | | | | | | | | 16 | 17 | - | 19 | - | 21 | - | 23 | 24 | - | - | - | 28 | 29 | 30 | - | - | - | - | 85 | | |
| | | | | | | | | | - | - | - | - | - | - | - | - | - | - | 41 | 42 | - | 44 | - | | | | | | | |
| | | | | | | | | | 46 | 47 | 48 | - | - | 51 | 52 | 53 | 54 | 55 | 56 | - | - | 59 | 60 | 86 | - | - | - | - | | |
| | | | | | | | | | 61 | - | - | 64 | - | 66 | 67 | 68 | 69 | 70 | 71 | - | 73 | 74 | 75 | 91 | - | - | - | 95 | | |
| GPEC RCPT CONN 95 CKT TOP LVR KEY 5/48 | 349929005 | 5-BLACK | IH | PLR | LT | LA | M | R | - | - | 3 | 4 | - | 6 | 7 | 8 | 9 | - | - | - | - | - | 15 | - | 77 | 78 | - | 80 | SALEABLE | |
| | | | | | | | | | 16 | 17 | - | 19 | - | 21 | - | 23 | 24 | - | - | - | 28 | 29 | 30 | - | - | - | - | 85 | | |
| | | | | | | | | | - | - | - | - | - | - | - | - | - | - | 41 | 42 | - | 44 | - | | | | | | | |
| | | | | | | | | | 46 | 47 | 48 | - | - | 51 | - | 53 | 54 | 55 | 56 | - | - | 59 | 60 | 86 | - | - | - | - | | |
| | | | | | | | | | 61 | - | - | 64 | - | 66 | 67 | 68 | 69 | 70 | 71 | - | 73 | 74 | 75 | 91 | - | - | - | 95 | | |
| GPEC RCPT CONN 95 CKT TOP LVR KEY 5/50 | 349929006 | 5-BLACK | IH | PLR | LT | LA | M | R | - | - | - | 4 | 5 | - | - | - | - | - | - | - | - | - | - | - | - | - | - | - | SALEABLE | |
| | | | | | | | | | - | - | - | 19 | - | 21 | - | 23 | 24 | 25 | 26 | 27 | - | - | - | 81 | 82 | - | - | - | | |
| | | | | | | | | | 31 | - | - | - | - | - | 37 | 38 | 39 | - | 41 | - | 43 | 44 | - | | | | | | | |
| | | | | | | | | | - | - | 48 | 49 | - | - | 52 | - | 54 | 55 | 56 | - | 58 | 59 | 60 | - | 87 | 88 | 89 | - | | |
| | | | | | | | | | 61 | 62 | 63 | 64 | 65 | 66 | 67 | 68 | - | 70 | 71 | 72 | 73 | 74 | 75 | - | 92 | - | - | - | | |

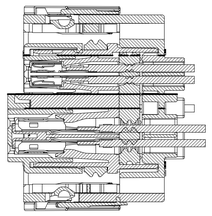

TERMINALS AND TPA SHOWN
IN FINAL LOCKED POSITION

SECTION X-X

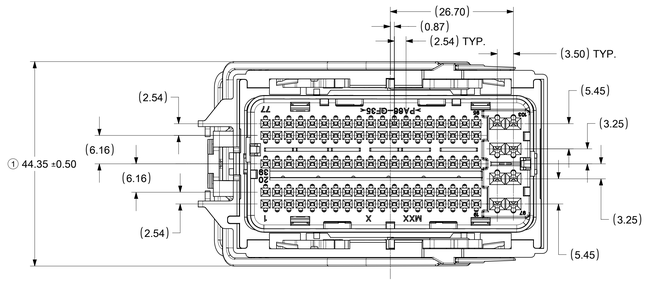


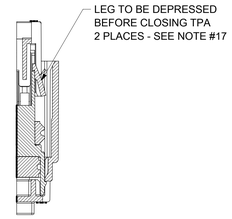


SECTION Z-Z

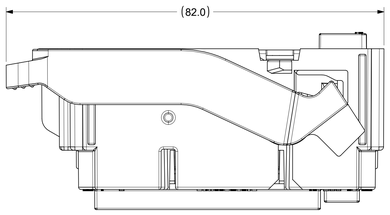


TPA SHOWN IN CLOSED POSITION
AND LEVER IN MATE POSITION

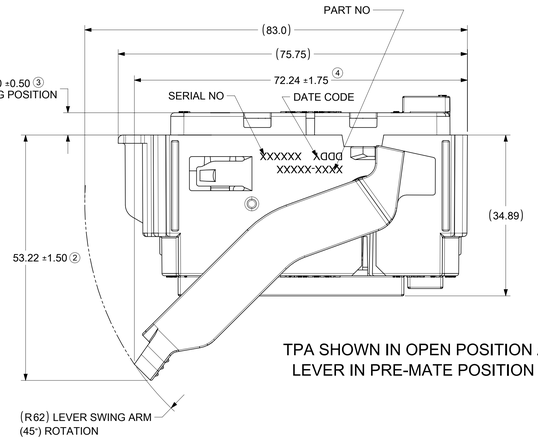


TPA SHOWN IN OPEN POSITION AND
LEVER IN PRE-MATE POSITION

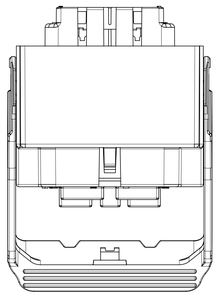

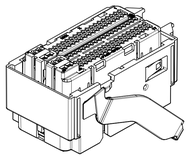

AROUND-THE-END LEVER OPTION
P/N 34993-0001, KEY 1

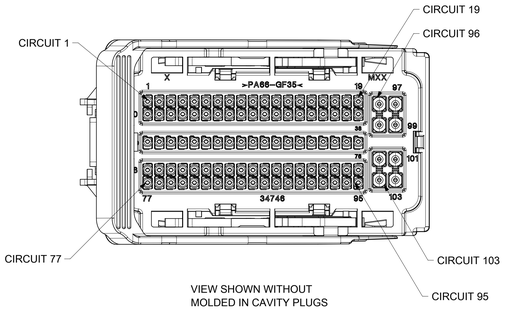


VIEW SHOWN WITHOUT
MOLDED IN CAVITY PLUGS

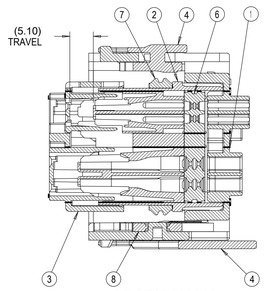


SECTION Y-Y

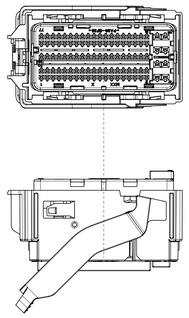

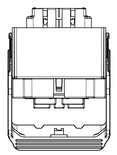

FULL SIZE VIEWS

| BILL OF MATERIAL | | | | | | | | | | | | | | | | |
|---|---|---|---|---|---|---|---|---|---|---|---|---|---|---|---|---|
| QTY. | | | | | | | | | | ITEMS | MOLEX PART NUMBER | DESCRIPTION | COLOR | RECYCLING CODE | WEIGHT (GRAMS) |
| | | | | | | | | 1 | 1 | 1 | 347460501 | OUTER SHROUD HOUSING KEYING OPTION "1" | BLACK | >PA66-GF35< | 26.84g |
| | | | | | | 1 | 1 | | | 1 | 347460502 | OUTER SHROUD HOUSING KEYING OPTION "2" | BLACK | >PA66-GF35< | 26.84g |
| | | | | 1 | 1 | | | | | 1 | 347460503 | OUTER SHROUD HOUSING KEYING OPTION "3" | BLACK | >PA66-GF35< | 26.84g |
| | | 1 | 1 | | | | | | | 1 | 347460504 | OUTER SHROUD HOUSING KEYING OPTION "4" | BLACK | >PA66-GF35< | 26.84g |
| 1 | 1 | | | | | | | | | 1 | 347460505 | OUTER SHROUD HOUSING KEYING OPTION "5" | BLACK | >PA66-GF35< | 26.84g |
| 1 | 1 | 1 | 1 | 1 | 1 | 1 | 1 | 1 | 1 | 2 | 347460300 | CAVITY SECTION HOUSING | BLACK | >PA66-GF35< | 19.71g |
| 1 | 1 | 1 | 1 | 1 | 1 | 1 | 1 | 1 | 1 | 3 | 349930401 | TPA | NATURAL | >PA66-GF35< | 7.50g |
| | 1 | | 1 | | 1 | | 1 | | 1 | 4 | 347450801 | MATE ASSIST LEVER END LATCH | GRAY | >PA66-GF35< | 6.54g |
| 1 | | 1 | | 1 | | 1 | | 1 | | 5 | 347450802 | MATE ASSIST LEVER OVER-THE-TOP | GRAY | >PA66-GF35< | 6.10g |
| 1 | 1 | 1 | 1 | 1 | 1 | 1 | 1 | 1 | 1 | 6 | 347460600 | GROMMET SEAL | LT BLUE | NA | 5.97g |
| 1 | 1 | 1 | 1 | 1 | 1 | 1 | 1 | 1 | 1 | 7 | 347450700 | INTERFACIAL SEAL | GREEN | NA | 1.47g |
| 2 | 2 | 2 | 2 | 2 | 2 | 2 | 2 | 2 | 2 | 8 | 347450805 | LEVER ARM | GRAY | >PA66-GF35< | 0.55g |
| 349939001 | 349938001 | 349937001 | 349936001 | 349935001 | 349934001 | 349933001 | 349932001 | 349931001 | 349930001 | MOLEX ASSY PART NUMBER | ALL CAVITY PLUGS REMOVED | | | | |

NOTES: UNLESS OTHERWISE SPECIFIED

1. PART MUST CONFORM TO USCAR/SAE-2 REV 5 DATED NOV2007.
   EXCEPTIONS: NONE
2. THE OPERATING ENVIRONMENT CRITERIA FOR THIS CONNECTOR SYSTEM IS USCAR TEMPERATURE CLASS 3, SEALING CLASS S3 AND VIBRATION CLASS V1.
3. ASSEMBLIES WILL ONLY PASS HIGH PRESSURE SPRAY REQUIREMENTS WITH WIRE DRESS COVER ATTACHED.
4. MAXIMUM LEVER ENGAGEMENT FORCE POPULATED WITH TERMINALS IS NOT TO EXCEED 75N.
5. TERMINAL TPA/PLR IS SHIPPED TO HARNESS MANUFACTURER IN PRE-LOAD POSITION AS SHOWN.
6. ALL PLASTIC PARTS MUST HAVE MATERIAL IDENTIFICATION SYMBOLS CLEARLY MARKED, WHEREVER PACKAGE SIZE PERMITS.
7. ENGINEERING APPROVAL REQUIRED FOR ALL SOURCING AND TOOLING OF THIS PART.
8. FOR ENGINEERING APPROVED SOURCE SEE ENGINEERING RELEASE.
9. ENGINEERING APPROVAL OF SAMPLE FROM SUPPLIER IS REQUIRED PRIOR TO AUTHORIZATION OF PART PRODUCTION.
10. CHANGES IN DESIGN COMPOSITION OR PROCESSING OF THE PART PREVIOUSLY APPROVED FOR PART PRODUCTION REQUIRES PRIOR ENGINEERING APPROVAL.
11. GENERAL TOLERANCE:
    LINEAR DIMENSION: ±0.10
    ANGULAR DIMENSION: ±3°
12. 0.3 MAXIMUM RADIUS PERMISSIBLE ON EDGES AND FILLETS SHOWN AS SHARP FOR PLASTIC PARTS.
13. PARTS ARE TO BE FREE OF SCRATCHES, DISCOLORATION, SALT RESIDUE, OR OTHER IMPERFECTIONS THAT MAY AFFECT FUNCTION OR FIT OF PART.
14. SOURCE IDENTIFICATION MARK, PRODUCTION DATE CODE, AND ASSEMBLY PART NUMBER MUST BE PERMANENTLY APPLIED ON THE PART WITH 1.5MM MINIMUM LETTER SIZE FROM THE BOTTOM TO THE TOP OF THE CHARACTERS AND LEGIBLE WHEREVER PACKAGE SIZE PERMITS OR OTHER AGREEMENTS ARE MADE. MARKING MAY BE LOCATED ON EITHER SIDE OF THE PART.
15. 25% MAXIMUM REGRIND ALLOWABLE IN MOLDED COMPONENTS.
16. SEE MOLEX APPLICATION SPEC AS-34992-001 FOR CONNECTOR SERVICE & USEAGE INSTRUCTIONS.
17. OPTIONAL WIREDRESS COVERS FOR THE AROUND-THE-END LEVER OPTION ARE SHIPPED SEPARATELY
18. WIREDRESS COVER FOR THE OVER-THE-TOP LEVER OPTION IS SHIPPED SEPARATELY
19. OPTIONAL 0.64 LOOSE PIECE PLUG, 34676-0002, IS SHIPPED SEPARATELY
20. OPTIONAL 1.5 LOOSE PIECE PLUG, 34345-4001, IS SHIPPED SEPARATELY
21. MOLEX MX150 TERMINAL REMOVAL TOOL P/N 63813-1500
22. MOLEX 0.64 TERMINAL REMOVAL TOOL P/N 63813-3501
23. TPA/PLR MUST BE REMOVED TO SERVICE THE 0.64 TERMINALS
24. TPA SEATING TOOL P/N 346760200 / 346760201
    SEE SHEET 2 FOR ADDITIONAL INFORMATION
25. FOR PINOUT AND DRESS COVER CONFIGURATION CHART SEE DOCUMENT: 349920002-SD

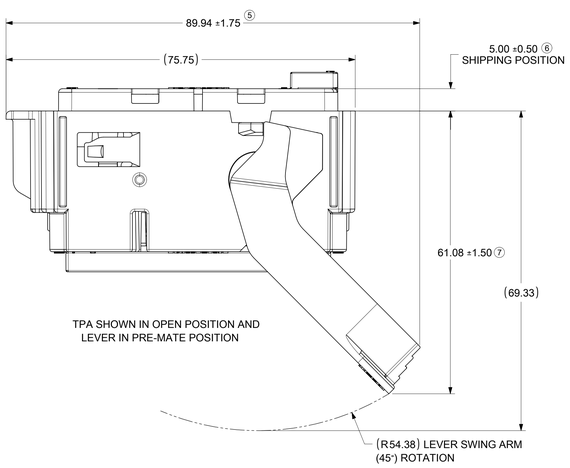


TPA SHOWN IN OPEN POSITION AND
LEVER IN PRE-MATE POSITION

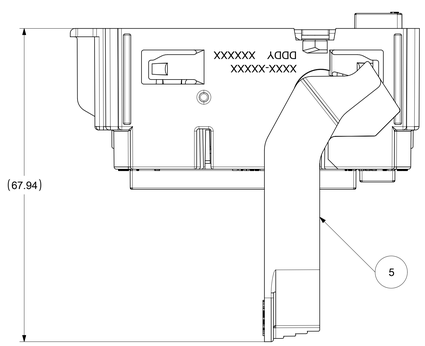


TPA SHOWN IN CLOSED POSITION AND LEVER IN MATE POSITION
LOCKING FEATURES TO BE DESIGNED INTO DRESS COVER FOR THIS LEVER

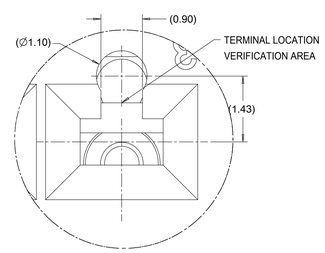


DETAIL M
SCALE 20:1
1.5 TERMINAL LOCATION
VERIFICATION HOLE

| DESCRIPTION | NOMINAL TERMINAL SIZE | COLOR/ PLATING | SUPPLIER PART NUMBER | MATERIAL/SPECIFICATION NUMBER | APPLICABLE WIRE SIZE |
|---|---|---|---|---|---|
| | | | | | ES-AU5T-1A348-AA REV A MIL 123A |
| TERMINAL - FEMALE (Ag) | 0.64 | SILVER | 2077131254 | COPPER ALLOY/SILVER PLATE | 0.35mm² (DIA 1.20 - 1.40) |
| | | | | | 0.50mm² (DIA 1.40 - 1.70) |
| TERMINAL - FEMALE (Ag) | 0.64 | SILVER | 2077131354 | COPPER ALLOY/SILVER PLATE | 0.75mm² (DIA 1.70 - 1.90) |
| | | | | | --- |
| TERMINAL - FEMALE (Sn) | 1.50 | TIN | 330122003 | COPPER ALLOY/TIN PLATE | 22AWG(DIA 1.50 - 1.65) |
| | | | | | --- |
| TERMINAL - FEMALE (Sn) | 1.50 | TIN | 330122004 | COPPER ALLOY/TIN PLATE | 0.35mm² (DIA 1.20 - 1.40) |
| | | | | | 0.50mm² (DIA 1.40 - 1.70) |
| TERMINAL - FEMALE (Sn) | 1.50 | TIN | 330122002 | COPPER ALLOY/TIN PLATE | 20AWG (DIA 1.70 - 1.85) |
| | | | | | 0.75mm² (DIA 1.70 - 1.90) |
| | | | | | 18AWG (DIA 1.91 - 2.06) |
| | | | | | 0.80mm² |
| TERMINAL - FEMALE (Sn) | 1.50 | TIN | 330122001 | COPPER ALLOY/TIN PLATE | 16AWG (DIA 2.18 - 2.34) |
| | | | | | 1.50mm² (DIA 2.20 - 2.40) |
| | | | | | ----- |

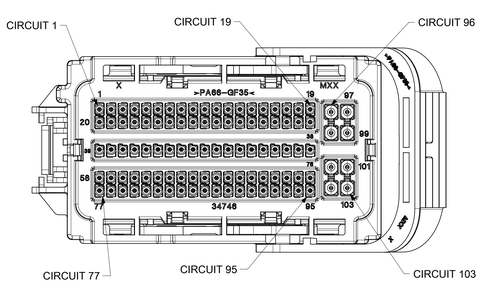


VIEW SHOWN WITH
MOLDED IN CAVITY PLUGS

OVER-THE-TOP LEVER OPTION
P/N 34993-1001, KEY 1

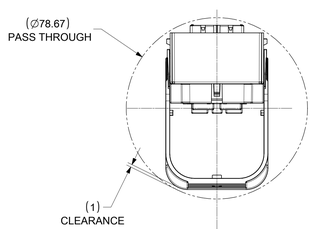


SCALE 1:1

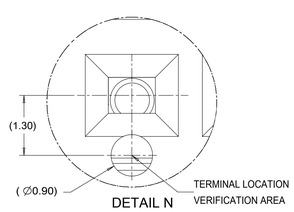


DETAIL N
SCALE 20:1
0.64 TERMINAL LOCATION
VERIFICATION HOLE

| SYMBOLS | DIMENSION UNITS | SCALE | CURRENT REV DESC: NOTE AND TABLE UPDATED | | | |
|---|---|---|---|---|---|---|
| = 0 | mm | 2:1 | | | | |
| = 0 | GENERAL TOLERANCES (UNLESS SPECIFIED) | | | | | |
| = 0 | ANGULAR TOL | ± | EC NO: | 677806 | | |
| = 0 | 4 PLACES | ± | DRWN: | NBOHIDAR | 2021/09/15 | |
| = 0 | 3 PLACES | ± | CHK'D: | BDICK01 | 2021/09/28 | |
| = 0 | 2 PLACES | ± | APPR: | BDICK01 | 2021/09/28 | |
| = 0 | 1 PLACE | ± | INITIAL REVISION: | | | |
| = 0 | 0 PLACES | ± | DRWN: | NBOHIDAR | 2018/09/01 | |
| = 0 | DRAFT WHERE APPLICABLE MUST REMAIN WITHIN DIMENSIONS | | APPR: | APROFFITT | 2018/09/07 | |
| = 0 | | | | | | |

SEE NOTES

THIS DRAWING CONTAINS INFORMATION THAT IS PROPRIETARY TO MOLEX ELECTRONIC TECHNOLOGIES, LLC AND SHOULD NOT BE USED WITHOUT WRITTEN PERMISSION

molex

GPEC IV CONNECTOR ASSEMBLY
103 CIRCUIT

PRODUCT CUSTOMER DRAWING

| DOCUMENT NUMBER | DOC TYPE | DOC PART | REVISION |
|---|---|---|---|
| 349930001-SD | PSD | 000 | A8 |

| THIRD ANGLE PROJECTION | DRAWING | SERIES | MATERIAL NUMBER | CUSTOMER | SHEET NUMBER |
|---|---|---|---|---|---|
| | E-SIZE | 34993 | CHARTED | GENERAL MARKET | 1 OF 3 |

| DOCUMENT STATUS | P1 | RELEASE DATE | 2021/09/28 01:26:06 |
|---|---|---|---|

# KEYWAY DEFINITION

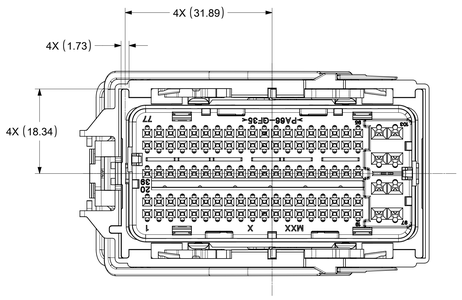


34993-0XXX (END LATCH LEVER)
34993-1XXX (TOP LATCH LEVER)
KEY OPTION 1

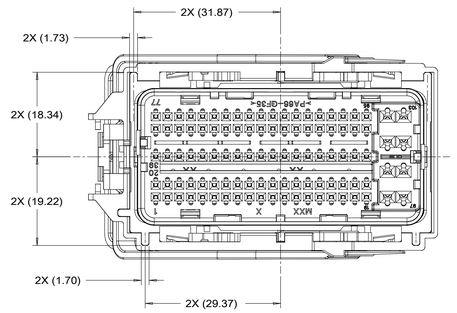


34993-6XXX (END LATCH LEVER)
34993-7XXX (TOP LATCH LEVER)
KEY OPTION 4

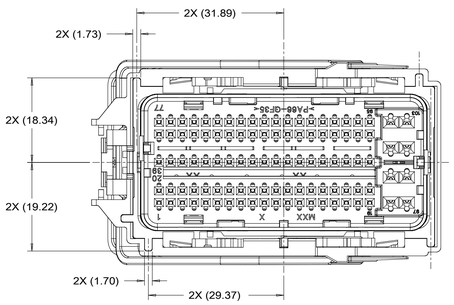


34993-2XXX (END LATCH LEVER)
34993-3XXX (TOP LATCH LEVER)
KEY OPTION 2

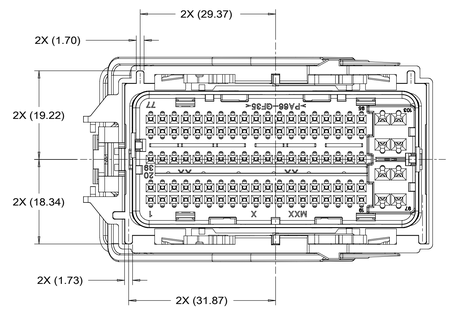


34993-8XXX (END LATCH LEVER)
34993-9XXX (TOP LATCH LEVER)
KEY OPTION 5

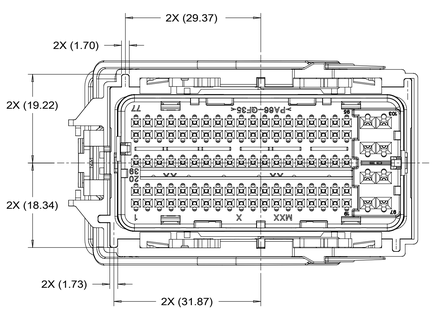


34993-4XXX (END LATCH LEVER)
34993-5XXX (TOP LATCH LEVER)
KEY OPTION 3

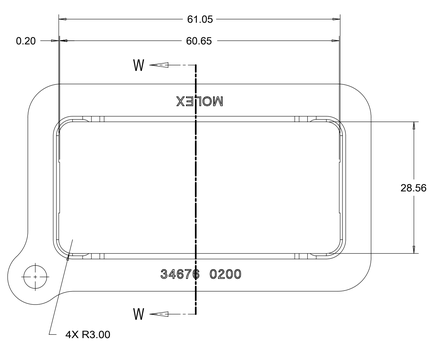


TPA SEATING TOOL

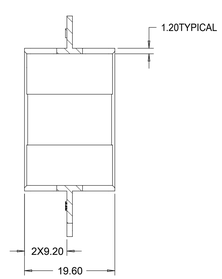


SECTION W-W

# RECOMMENDED MATING INTERFACE

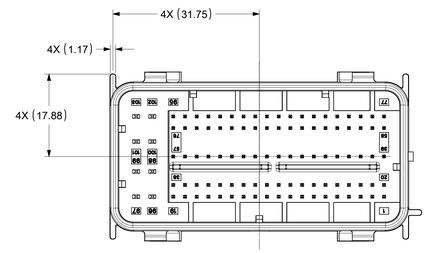


KEY OPTION 1

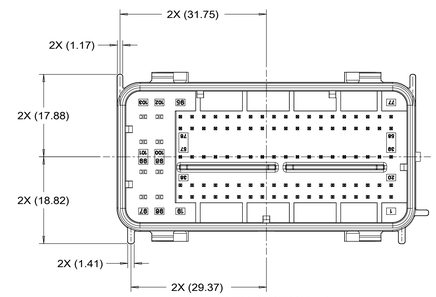


KEY OPTION 4

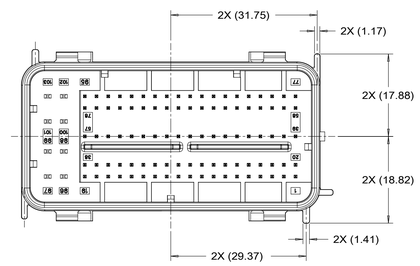


KEY OPTION 2

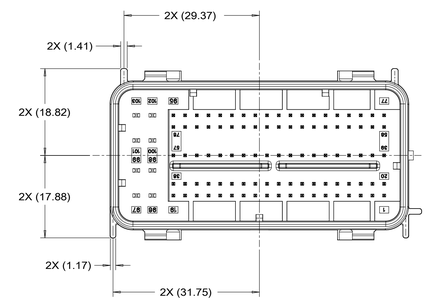


KEY OPTION 5

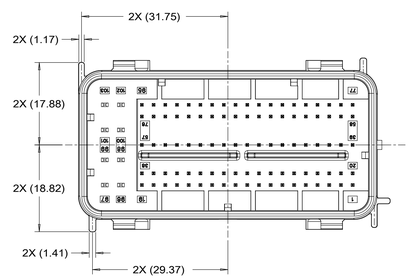


KEY OPTION 3

| SYMBOLS | |
|---|---|
| FA | = 0 |
| FC | = 0 |
| FB | = 0 |
| S | = 0 |
| | = 0 |
| C | = 0 |
| | = 0 |
| | = 0 |
| G | = 0 |

THIS DRAWING CONTAINS INFORMATION THAT IS PROPRIETARY TO MOLEX ELECTRONIC TECHNOLOGIES, LLC AND SHOULD NOT BE USED WITHOUT WRITTEN PERMISSION

| DIMENSION UNITS | SCALE |
|---|---|
| mm | 2:1 |

GENERAL TOLERANCES (UNLESS SPECIFIED)

| | |
|---|---|
| ANGULAR TOL | ± |
| 4 PLACES | ± |
| 3 PLACES | ± |
| 2 PLACES | ± |
| 1 PLACE | ± |
| 0 PLACES | ± |

DRAFT WHERE APPLICABLE MUST REMAIN WITHIN DIMENSIONS

CURRENT REV DESC: NOTE AND TABLE UPDATED

EC NO: 677806
DRWN: NBOHIDAR 2021/09/15
CHK'D: BDICK01 2021/09/28
APPR: BDICK01 2021/09/28

INITIAL REVISION:
DRWN: NBOHIDAR 2018/09/01
APPR: APROFFITT 2018/09/07

SEE NOTES

molex

GPEC IV CONNECTOR ASSEMBLY
103 CIRCUIT

PRODUCT CUSTOMER DRAWING

| DOCUMENT NUMBER | DOC TYPE | DOC PART | REVISION |
|---|---|---|---|
| 349930001-SD | PSD | 000 | A8 |

| THIRD ANGLE PROJECTION | DRAWING | SERIES | MATERIAL NUMBER | CUSTOMER | SHEET NUMBER |
|---|---|---|---|---|---|
| | E-SIZE | 34993 | CHARTED | GENERAL MARKET | 2 OF 3 |

| DOCUMENT STATUS | P1 | RELEASE DATE | 2021/09/28 01:26:06 |
|---|---|---|---|

# RECOMMENDED MATING INTERFACE

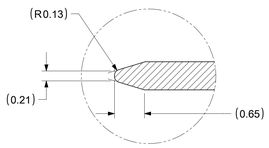


DETAIL W
SCALE 20:1
OPTIONAL
0.64 WIRE PIN

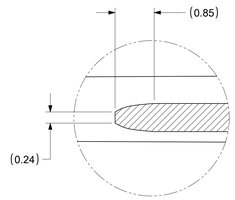


DETAIL R
SCALE 20:1
OPTIONAL
0.64 STAMPED PIN

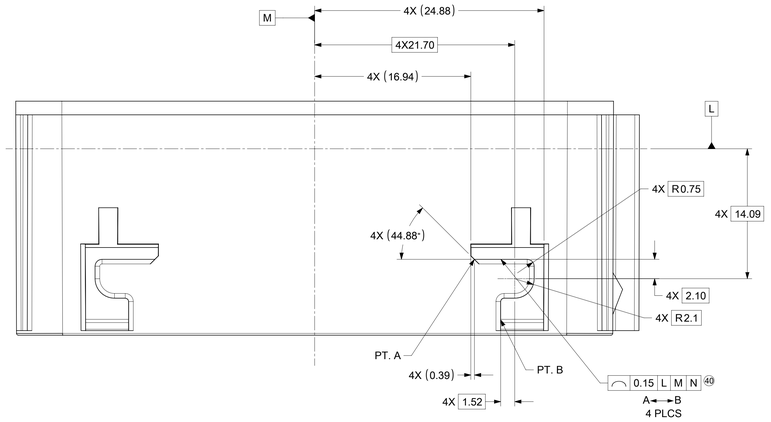


NOTES FOR INTERFACE: UNLESS OTHERWISE SPECIFIED

1. GENERAL TOLERANCES:
   LINEAR DIMENSIONS: ±0.20
   ANGULAR DIMENSIONS: ±3°
2. DRAFT ANGLE PERMISSIBLE ONLY WITHIN DRAWING TOLERANCE.
3. SEAL SURFACE. NO WITNESS LINES OR DAMAGE PERMITTED.
4. ALL UNMARKED RADII TO BE 0.5 MAX. UNLESS OTHERWIS SPECIFIED.
5. ZERO DRAFT AREA
6. CONNECTION SYSTEM VALIDATED TO USCAR2, REVISION 5
7. PIN ROW HEIGHTS ARE INTENTIONALLY OFFSET

POWER CONTACT PIN NOTES: (1.5 CIRCUITS)

1. MATERIAL: Cu ALLOY
   WITH TENSILE STRENGTH > 410 N/mm²
   ELECTRICAL CONDUCTANCE > 16 Sm/mm²
   (>28% IACS AT 20°C)
2. BASE PLATING: 1.25-2.25µm Ni OVERALL.
3. REFLOW TIN PLATING: 2.5-4.0µm OVERALL.
4. CONTACT MUST BE FREE OF BURRS AND SHARP EDGES.
5. PROCESS COMPONENTS IN A LOW-SULFUR ENVIRONMENT AND AVOID CONTACT WITH MATERIALS THAT TRANSFER SULFUR TO THE ENVIRONMENT.

SIGNAL CONTACT PIN NOTES (0.64 CIRCUITS)

1. MATERIAL: Cu ALLOY
   WITH TENSILE STRENGTH > 410 N/mm²
   ELECTRICAL CONDUCTANCE > 16 Smm/mm²
   (>28% IACS AT 20°C)
2. BASE PLATING 1.25-2.5µm NI OVERALL.
3. SILVER PLATING: 2-4µm Ag WITH TARNISH RESISTANT TREATMENT APPLIED TO THE ENTIRE SILVER SURFACE.
4. CONTACT MUST BE FREE OF BURRS AND SHARP EDGES.
5. FOR SILVER PLATING: ELECTRICAL PERFORMANCE IS NOT AFFECTED BY GREY OR BLACK TARNISH ON THE SILVER PLATING SURFACE. ACCEPTABLE SILVER PIN SURFACES CAN INCLUDE GREY OR BLACK TARNISH.
6. PROCESS COMPONENTS IN A LOW-SULFER ENVIRONMENT AND AVOID CONTACT WITH MATERIALS THAT TRANSFER SULFER TO THE ENVIRONMENT.

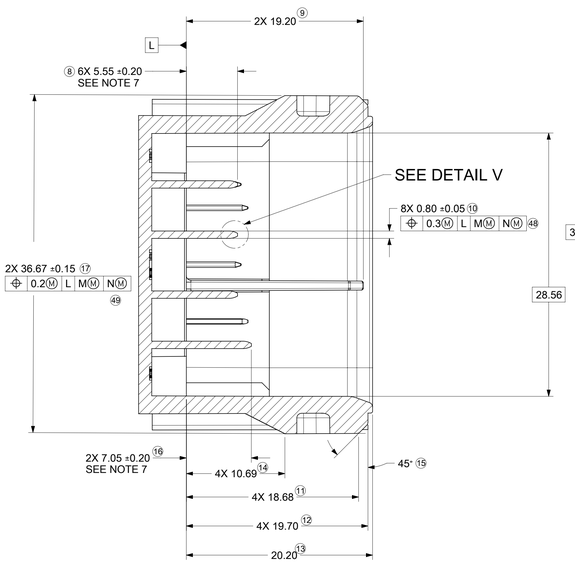


SECTION Y-Y

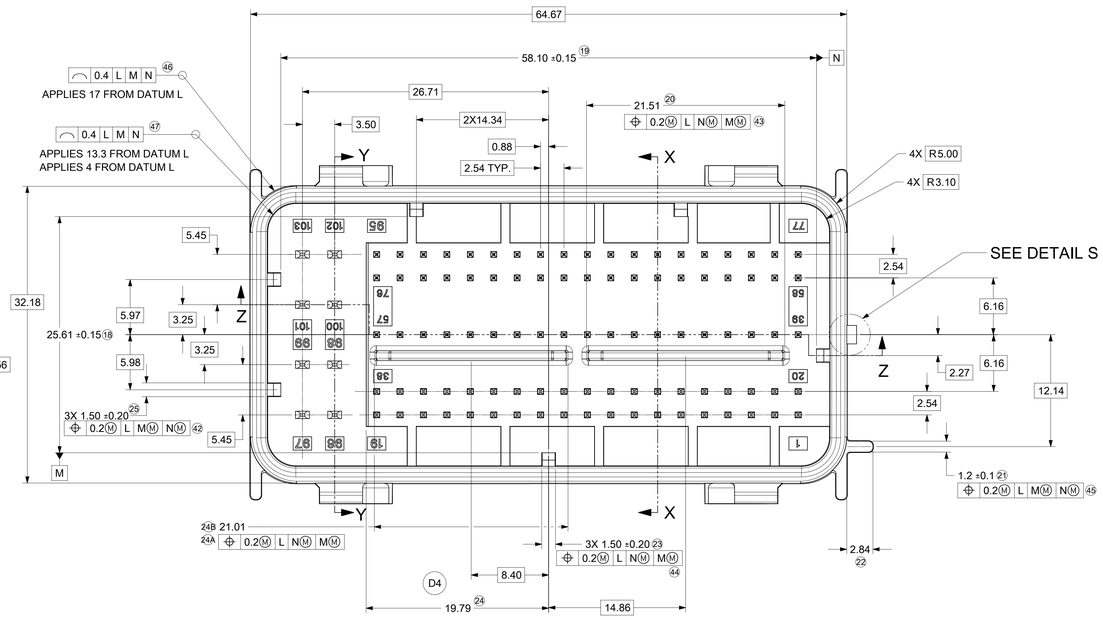


KEY "1" SHOWN

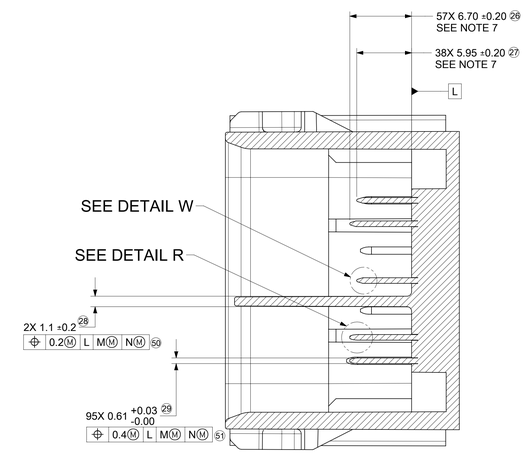


SECTION X-X

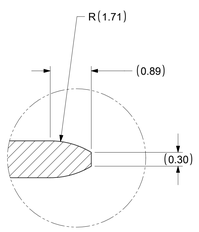


DETAIL V
SCALE 20:1
TYPICAL 1.5 BLADE

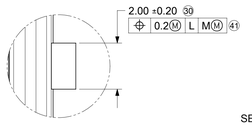


DETAIL S
SCALE 10:1

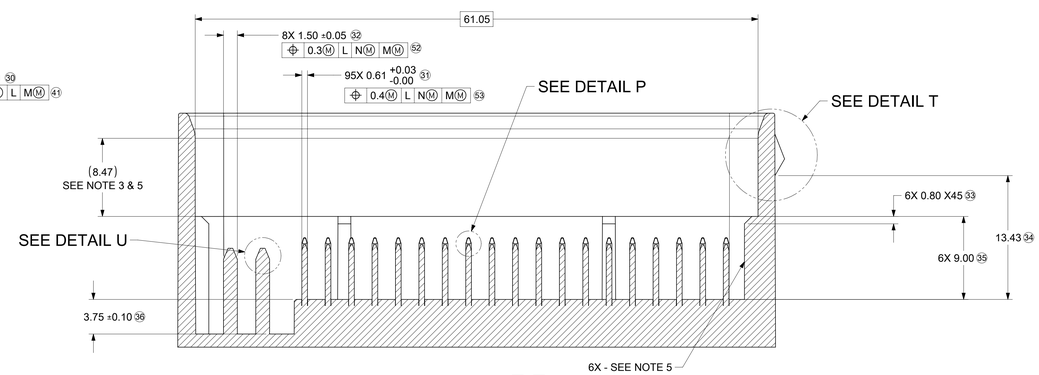


SECTION Z-Z

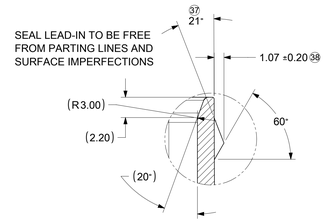


DETAIL T
SCALE 4:1

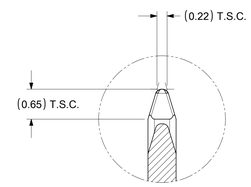


DETAIL P
SCALE 20:1
TYPICAL 0.64 PINS

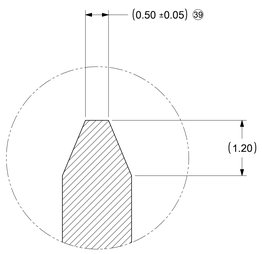


DETAIL U
SCALE 20:1
TYPICAL 1.5 BLADE

| SYMBOLS | THIS DRAWING CONTAINS INFORMATION THAT IS PROPRIETARY TO MOLEX ELECTRONIC TECHNOLOGIES, LLC AND SHOULD NOT BE USED WITHOUT WRITTEN PERMISSION | | | |
|---|---|---|---|---|
| EA = 0 | DIMENSION UNITS: mm | SCALE: 2:1 | CURRENT REV DESC: NOTE AND TABLE UPDATED | molex |
| EC = 0 | GENERAL TOLERANCES (UNLESS SPECIFIED) | | | |
| EB = 0 | ANGULAR TOL ± | | EC NO: 677806 | GPEC IV CONNECTOR ASSEMBLY 103 CIRCUIT |
| S = 0 | 4 PLACES ± | | DRWN: NBOHIDAR 2021/09/15 | |
| ▼ = 0 | 3 PLACES ± | | CHK'D: BDICK01 2021/09/28 | |
| C = 0 | 2 PLACES ± | | APPR: BDICK01 2021/09/28 | PRODUCT CUSTOMER DRAWING |
| ☒ = 0 | 1 PLACE ± | | INITIAL REVISION: | DOCUMENT NUMBER: 349930001-SD; DOC TYPE: PSD; DOC PART: 000; REVISION: A8 |
| ■ = 0 | 0 PLACES ± | | DRWN: NBOHIDAR 2018/09/01 | |
| G = 0 | DRAFT WHERE APPLICABLE MUST REMAIN WITHIN DIMENSIONS | | APPR: APROFFITT 2018/09/07 | |
| | THIRD ANGLE PROJECTION | DRAWING: E-SIZE | SERIES: 34993 | MATERIAL NUMBER: CHARTED; CUSTOMER: GENERAL MARKET; SHEET NUMBER: 3 OF 3 |

SEE NOTES

| DOCUMENT STATUS | P1 | RELEASE DATE | 2021/09/28 01:26:06 |
|---|---|---|---|

molex

# GPEC IV 103 WAY RECEPTACLE SEALED ASSEMBLY MAT SEAL

## BOM AND PIN OUT SHEET

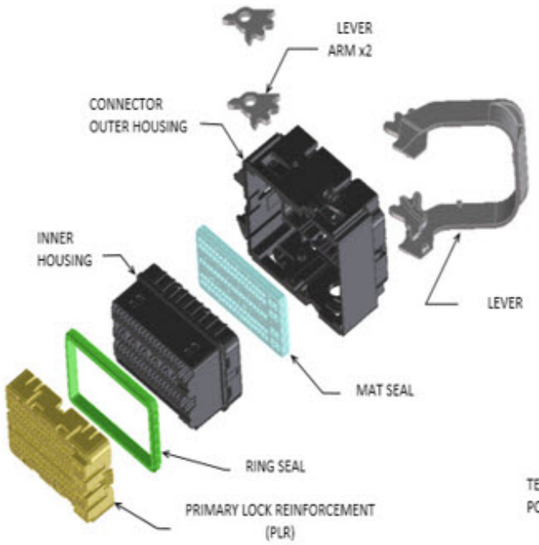


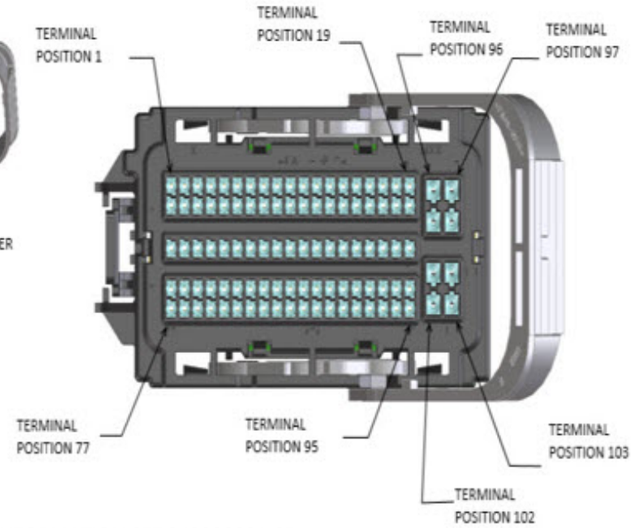


| ABBREVIATION | DESCRIPTION | COLOR | MATERIAL |
|---|---|---|---|
| 1-BLACK | OUTER HOUSING KEYING OPTION 1 | BLACK | PA66 GF35 |
| 2-BLACK | OUTER HOUSING KEYING OPTION 2 | BLACK | PA66 GF35 |
| 3-BLACK | OUTER HOUSING KEYING OPTION 3 | BLACK | PA66 GF35 |
| 4-BLACK | OUTER HOUSING KEYING OPTION 4 | BLACK | PA66 GF35 |
| 5-BLACK | OUTER HOUSING KEYING OPTION 5 | BLACK | PA66 GF35 |
| NIL - GRAY | OUTER HOUSING KEYING OPTION NIL | GRAY | PA66 GF35 |
| IH | INNER HOUSING | BLACK | PA66 GF35 |
| PLR | TPA/PLR | NATURAL | PA66 GF35 |
| LE | LEVER - END LATCH | GRAY | PA66 GF35 |
| LT | LEVER - TOP LATCH | GRAY | PA66 GF35 |
| LA | LEVER ARM | GRAY | PA66 GF35 |
| M | MAT SEAL | LIGHT BLUE | INHERENTLY LUBRICATED SILICONE |
| R | RING SEAL | GREEN | INHERENTLY LUBRICATED SILICONE |

FOR ADDITIONAL INFORMATION SEE 349930001-SD

LOOK AT 2032000001-SD FOR WIRE DRESS COVER OPTION

| ASSEMBLY DESCRIPTION | ASSEMBLY PART NUMBER | COMPONENT<br>THE PRESENCE OF AN ABBREVIATION INDICATES THE PRESENCE OF THAT COMPONENT. | | | | | | | BLOCKED TERMINALS<br>CAVITY WITH A NUMBER INDICATES BLOCKED TERMINAL POSITION<br>CAVITY WITHOUT A NUMBER INDICATES OPEN TERMINAL POSITION | | | | | | | | | | | | | | | | | | STATUS | COMMENTS |
|---|---|---|---|---|---|---|---|---|---|---|---|---|---|---|---|---|---|---|---|---|---|---|---|---|---|---|---|
| | | OUTER HOUSING KEY/COLOR | INNER HOUSING | PLR | LEVER | LEVER ARM (x/2) | MAT SEAL | RING SEAL | | | | | | | | | | | | | | | | | | | |
| GPEC RCPT CONN 103 CKT END LVR KEY 1/103 | 349930001 | 1-BLACK | IH | PLR | LE | LA | M | R | - | - | - | - | - | - | - | - | - | - | - | - | - | - | - | - | - | - | SALEABLE | |
| | | | | | | | | | - | - | - | - | - | - | - | - | - | - | - | - | - | - | - | - | - | - | | |
| | | | | | | | | | - | - | - | - | - | - | - | - | - | - | - | - | - | - | - | - | | | | |
| | | | | | | | | | - | - | - | - | - | - | - | - | - | - | - | - | - | - | - | - | - | - | | |
| | | | | | | | | | - | - | - | - | - | - | - | - | - | - | - | - | - | - | - | - | - | - | | |
| GPEC RCPT CONN 103 CKT END LVR KEY 1/0 | 349930002 | 1-BLACK | IH | PLR | LE | LA | M | R | 1 | 2 | 3 | 4 | 5 | 6 | 7 | 8 | 9 | 10 | 11 | 12 | 13 | 14 | 15 | 16 | 17 | 18 | SALEABLE | |
| | | | | | | | | | 19 | 96 | 97 | | | | | | | | | | | | | | | | | |
| | | | | | | | | | 20 | 21 | 22 | 23 | 24 | 25 | 26 | 27 | 28 | 29 | 30 | 31 | 32 | 33 | 34 | 35 | 36 | 37 | | |
| | | | | | | | | | 38 | 98 | 99 | | | | | | | | | | | | | | | | | |
| | | | | | | | | | 39 | 40 | 41 | 42 | 43 | 44 | 45 | 46 | 47 | 48 | 49 | 50 | 51 | 52 | 53 | 54 | 55 | 56 | | |
| | | | | | | | | | 57 | | | | | | | | | | | | | | | | | | | |
| | | | | | | | | | 58 | 59 | 60 | 61 | 62 | 63 | 64 | 65 | 66 | 67 | 68 | 69 | 70 | 71 | 72 | 73 | 74 | 75 | | |
| | | | | | | | | | 76 | 100 | 101 | | | | | | | | | | | | | | | | | |
| | | | | | | | | | 77 | 78 | 79 | 80 | 81 | 82 | 83 | 84 | 85 | 86 | 87 | 88 | 89 | 90 | 91 | 92 | 93 | 94 | | |
| | | | | | | | | | 95 | 102 | 103 | | | | | | | | | | | | | | | | | |
| GPEC RCPT CONN 103 CKT END LVR KEY 4/19 | 349930003 | 4-BLACK | IH | PLR | LE | LA | M | R | - | - | - | - | - | - | - | - | - | - | - | - | - | - | - | - | - | - | SALEABLE | |
| | | | | | | | | | - | - | - | - | - | - | - | - | - | - | - | - | - | - | - | - | - | - | | |
| | | | | | | | | | - | - | - | - | - | - | - | - | - | - | - | - | - | - | - | - | - | - | | |
| | | | | | | | | | - | - | - | - | - | - | - | - | - | - | - | - | - | - | - | - | - | - | | |
| | | | | | | | | | 77 | 78 | 79 | 80 | 81 | 82 | 83 | 84 | 85 | 86 | 87 | 88 | 89 | 90 | 91 | 92 | 93 | 94 | | |
| | | | | | | | | | 95 | - | - | | | | | | | | | | | | | | | | | |
| GPEC RCPT CONN 103 CKT END LVR KEY 1/59 | 349930004 | 1-BLACK | IH | PLR | LE | LA | M | R | - | - | - | - | - | 6 | 7 | 8 | 9 | 10 | 11 | 12 | - | - | - | - | - | - | SALEABLE | |
| | | | | | | | | | - | - | - | - | - | - | - | - | - | - | - | - | - | - | - | - | - | - | | |
| | | | | | | | | | - | 21 | 22 | 23 | - | - | - | 27 | - | 29 | - | - | - | - | - | - | - | - | | |
| | | | | | | | | | - | 98 | - | | | | | | | | | | | | | | | | | |
| | | | | | | | | | - | - | 41 | 42 | 43 | 44 | 45 | 46 | 47 | 48 | 49 | 50 | 51 | 52 | - | - | - | - | | |
| | | | | | | | | | 57 | | | | | | | | | | | | | | | | | | | |
| | | | | | | | | | - | 59 | - | - | - | - | - | 65 | - | 67 | 68 | - | - | - | 72 | 73 | 74 | 75 | | |
| | | | | | | | | | 76 | - | 101 | | | | | | | | | | | | | | | | | |
| | | | | | | | | | - | 78 | - | 80 | - | - | - | 84 | 85 | - | - | - | - | - | - | 93 | 94 | 95 | | |
| | | | | | | | | | - | - | 103 | | | | | | | | | | | | | | | | | |
| GPEC RCPT CONN 103 CKT END LVR KEY 1/58 | 349930005 | 1-BLACK | IH | PLR | LE | LA | M | R | - | - | - | - | - | 6 | 7 | 8 | 9 | 10 | 11 | 12 | - | - | - | - | - | - | SALEABLE | |
| | | | | | | | | | - | 96 | - | | | | | | | | | | | | | | | | | |
| | | | | | | | | | - | 21 | 22 | 23 | - | - | - | 27 | - | 29 | - | - | - | - | - | - | - | - | | |
| | | | | | | | | | - | 98 | - | | | | | | | | | | | | | | | | | |
| | | | | | | | | | - | - | 41 | 42 | 43 | 44 | 45 | 46 | 47 | 48 | 49 | 50 | 51 | 52 | - | - | - | - | | |
| | | | | | | | | | 57 | | | | | | | | | | | | | | | | | | | |
| | | | | | | | | | - | 59 | - | - | - | - | - | 65 | - | 67 | 68 | - | - | - | 72 | 73 | 74 | 75 | | |
| | | | | | | | | | 76 | - | 101 | | | | | | | | | | | | | | | | | |
| | | | | | | | | | - | 78 | - | 80 | - | - | - | 84 | 85 | - | - | - | - | - | - | 93 | 94 | 95 | | |
| | | | | | | | | | - | - | 103 | | | | | | | | | | | | | | | | | |
| GPEC RCPT CONN 103 CKT END LVR KEY 1/48 | 349930006 | 1-BLACK | IH | PLR | LE | LA | M | R | 1 | 2 | - | - | 5 | - | 7 | 8 | 9 | - | 11 | - | 13 | - | 15 | - | 17 | 18 | SALEABLE | |
| | | | | | | | | | - | - | - | | | | | | | | | | | | | | | | | |
| | | | | | | | | | - | 21 | 22 | - | 24 | 25 | 26 | - | - | 29 | - | - | - | 33 | 34 | 35 | - | 37 | | |
| | | | | | | | | | - | - | - | | | | | | | | | | | | | | | | | |
| | | | | | | | | | - | 40 | - | - | 43 | 44 | 45 | 46 | 47 | - | - | - | 51 | 52 | 53 | 54 | - | 56 | | |
| | | | | | | | | | 57 | | | | | | | | | | | | | | | | | | | |
| | | | | | | | | | 58 | 59 | 60 | 61 | 62 | - | 64 | 65 | - | 67 | - | 69 | 70 | - | - | 73 | - | - | | |
| | | | | | | | | | - | - | - | | | | | | | | | | | | | | | | | |
| | | | | | | | | | - | - | - | - | 81 | 82 | - | 84 | 85 | 86 | 87 | 88 | - | 90 | - | 92 | - | - | | |
| | | | | | | | | | - | 102 | 103 | | | | | | | | | | | | | | | | | |

molex

# GPEC IV 103 WAY RECEPTACLE SEALED ASSEMBLY MAT SEAL

## BOM AND PIN OUT SHEET

| ASSEMBLY DESCRIPTION | ASSEMBLY PART NUMBER | COMPONENT<br>THE PRESENCE OF AN ABBREVIATION INDICATES THE PRESENCE OF THAT COMPONENT. | | | | | | | BLOCKED TERMINALS<br>CAVITY WITH A NUMBER INDICATES BLOCKED TERMINAL POSITION<br>CAVITY WITHOUT A NUMBER INDICATES OPEN TERMINAL POSITION | | | | | | | | | | | | | | | | | | | | STATUS | COMMENTS |
|---|---|---|---|---|---|---|---|---|---|---|---|---|---|---|---|---|---|---|---|---|---|---|---|---|---|---|---|---|---|
| | | OUTER HOUSING KEY/COLOR | INNER HOUSING | PLR | LEVER | LEVER ARM (x/2) | MAT SEAL | RING SEAL | | | | | | | | | | | | | | | | | | | | | |
| GPEC RCPT CONN 103 CKT TOP LVR KEY 1/103 | 349931001 | 1-BLACK | IH | PLR | LT | LA | M | R | - | - | - | - | - | - | - | - | - | - | - | - | - | - | - | - | - | - | - | SALEABLE | |
| | | | | | | | | | - | - | - | - | - | - | - | - | - | - | - | - | - | - | - | - | - | - | - | | |
| | | | | | | | | | - | - | - | - | - | - | - | - | - | - | - | - | - | - | - | - | - | | | | |
| | | | | | | | | | - | - | - | - | - | - | - | - | - | - | - | - | - | - | - | - | - | - | - | | |
| | | | | | | | | | - | - | - | - | - | - | - | - | - | - | - | - | - | - | - | - | - | - | - | | |
| GPEC RCPT CONN 103 CKT TOP LVR KEY 1/0 | 349931002 | 1-BLACK | IH | PLR | LT | LA | M | R | 1 | 2 | 3 | 4 | 5 | 6 | 7 | 8 | 9 | 10 | 11 | 12 | 13 | 14 | 15 | 16 | 17 | 18 | 19 | 96 | 97 | SALEABLE | |
| | | | | | | | | | 20 | 21 | 22 | 23 | 24 | 25 | 26 | 27 | 28 | 29 | 30 | 31 | 32 | 33 | 34 | 35 | 36 | 37 | 38 | 98 | 99 | | |
| | | | | | | | | | 39 | 40 | 41 | 42 | 43 | 44 | 45 | 46 | 47 | 48 | 49 | 50 | 51 | 52 | 53 | 54 | 55 | 56 | 57 | | | | |
| | | | | | | | | | 58 | 59 | 60 | 61 | 62 | 63 | 64 | 65 | 66 | 67 | 68 | 69 | 70 | 71 | 72 | 73 | 74 | 75 | 76 | 100 | 101 | | |
| | | | | | | | | | 77 | 78 | 79 | 80 | 81 | 82 | 83 | 84 | 85 | 86 | 87 | 88 | 89 | 90 | 91 | 92 | 93 | 94 | 95 | 102 | 103 | | |
| GPEC RCPT CONN 103 CKT TOP LVR KEY 1/66 | 349931003 | 1-BLACK | IH | PLR | LT | LA | M | R | 1 | - | - | - | 5 | - | - | 8 | - | - | - | - | - | - | - | - | 17 | 18 | - | 96 | - | SALEABLE | |
| | | | | | | | | | - | 21 | 22 | - | 24 | - | 26 | - | - | 29 | - | - | - | - | 34 | - | 36 | - | - | - | - | | |
| | | | | | | | | | - | 40 | - | - | 43 | - | - | - | 47 | - | - | - | - | - | 53 | - | 55 | - | 57 | | | | |
| | | | | | | | | | 58 | 59 | - | - | 62 | - | 64 | - | - | 67 | - | 69 | 70 | 71 | - | - | - | - | - | - | - | | |
| | | | | | | | | | - | - | - | 80 | 81 | - | - | - | 85 | 86 | 87 | 88 | - | 90 | - | - | - | 94 | - | 102 | 103 | | |
| GPEC RCPT CONN 103 CKT TOP LVR KEY 1/59 | 349931004 | 1-BLACK | IH | PLR | LT | LA | M | R | - | - | - | - | - | 6 | 7 | 8 | 9 | 10 | 11 | 12 | 13 | - | - | - | - | - | - | 96 | - | SALEABLE | |
| | | | | | | | | | - | - | - | 23 | - | - | - | - | - | - | - | 31 | - | - | - | 35 | - | - | - | - | - | | |
| | | | | | | | | | 39 | - | - | - | 43 | 44 | 45 | 46 | 47 | 48 | - | - | - | - | - | - | - | - | 57 | | | | |
| | | | | | | | | | 58 | - | 60 | 61 | 62 | 63 | 64 | 65 | - | - | 68 | 69 | - | 71 | - | 73 | 74 | - | - | - | - | | |
| | | | | | | | | | 77 | 78 | - | 80 | 81 | 82 | 83 | 84 | 85 | - | 87 | 88 | - | 90 | 91 | - | - | - | - | - | - | | |
| GPEC RCPT CONN 103 CKT TOP LVR KEY 1/44 | 349931005 | 1-BLACK | IH | PLR | LT | LA | M | R | 1 | 2 | - | - | 5 | - | 7 | 8 | 9 | - | - | - | 13 | - | - | 16 | 17 | 18 | 19 | 96 | - | SALEABLE | |
| | | | | | | | | | - | 21 | 22 | - | - | 25 | 26 | - | 28 | 29 | 30 | - | - | 33 | 34 | 35 | 36 | 37 | 38 | - | - | | |
| | | | | | | | | | - | 40 | - | - | - | - | 45 | 46 | - | - | - | - | 51 | 52 | 53 | 54 | 55 | 56 | 57 | | | | |
| | | | | | | | | | 58 | 59 | 60 | 61 | 62 | - | 64 | - | - | 67 | 68 | 69 | 70 | 71 | 72 | - | - | - | - | - | - | | |
| | | | | | | | | | - | 78 | 79 | 80 | 81 | 82 | - | 84 | 85 | 86 | - | 88 | - | 90 | - | - | - | - | - | 102 | 103 | | |
| GPEC RCPT CONN 103 CKT TOP LVR KEY 1/42 | 349931006 | 1-BLACK | IH | PLR | LT | LA | M | R | 1 | 2 | - | - | 5 | - | 7 | 8 | 9 | - | 11 | - | 13 | - | - | 16 | 17 | 18 | 19 | 96 | - | SALEABLE | |
| | | | | | | | | | - | 21 | 22 | - | - | 25 | 26 | - | 28 | 29 | 30 | - | - | 33 | 34 | 35 | 36 | 37 | 38 | - | - | | |
| | | | | | | | | | - | 40 | - | - | - | - | 45 | 46 | - | - | - | - | 51 | 52 | 53 | 54 | 55 | 56 | 57 | | | | |
| | | | | | | | | | 58 | 59 | 60 | 61 | 62 | - | 64 | - | - | 67 | 68 | 69 | 70 | 71 | 72 | - | - | - | - | - | - | | |
| | | | | | | | | | - | 78 | 79 | 80 | 81 | 82 | - | 84 | 85 | 86 | 87 | 88 | - | 90 | - | - | - | - | - | 102 | 103 | | |
| GPEC RCPT CONN 103 CKT TOP LVR KEY 1/51 | 349931007 | 1-BLACK | IH | PLR | LT | LA | M | R | 1 | 2 | - | - | 5 | - | 7 | 8 | 9 | 10 | - | - | 13 | - | - | - | 17 | 18 | - | 96 | - | SALEABLE | |
| | | | | | | | | | - | 21 | 22 | - | 24 | - | 26 | 27 | 28 | 29 | - | - | - | 33 | - | - | 36 | 37 | 38 | - | - | | |
| | | | | | | | | | - | 40 | - | - | - | - | 45 | 46 | - | - | - | - | 51 | 52 | - | - | - | 56 | 57 | | | | |
| | | | | | | | | | 58 | 59 | 60 | 61 | 62 | - | 64 | 65 | - | 67 | - | 69 | 70 | 71 | - | - | - | - | - | - | - | | |
| | | | | | | | | | - | 78 | 79 | 80 | 81 | 82 | 83 | 84 | - | - | - | 88 | - | 90 | 91 | - | - | - | - | 102 | 103 | | |
| GPEC RCPT CONN 103 CKT TOP LVR KEY 1/53 | 349931008 | 1-BLACK | IH | PLR | LT | LA | M | R | 1 | 2 | - | - | 5 | - | - | 8 | - | - | - | - | - | - | 15 | 16 | 17 | 18 | 19 | 96 | - | SALEABLE | |
| | | | | | | | | | 20 | 21 | 22 | - | 24 | - | 26 | - | - | - | 30 | - | - | - | 34 | - | 36 | - | 38 | - | - | | |
| | | | | | | | | | - | 40 | - | - | - | - | - | - | - | - | - | - | - | - | 53 | - | 55 | - | - | | | | |
| | | | | | | | | | - | 59 | 60 | - | 62 | - | 64 | - | 66 | 67 | 68 | 69 | 70 | 71 | 72 | - | 74 | - | - | - | - | | |
| | | | | | | | | | - | 78 | 79 | 80 | 81 | 82 | - | 84 | 85 | 86 | 87 | 88 | 89 | 90 | 91 | - | 93 | - | - | 102 | 103 | | |
| GPEC RCPT CONN 103 CKT TOP LVR KEY 1/54 | 349931009 | 1-BLACK | IH | PLR | LT | LA | M | R | 1 | 2 | - | - | 5 | - | - | 8 | - | - | - | - | - | - | 15 | 16 | 17 | 18 | 19 | 96 | - | SALEABLE | |
| | | | | | | | | | 20 | 21 | 22 | - | 24 | - | 26 | - | - | - | 30 | - | - | - | 34 | - | 36 | - | 38 | - | - | | |
| | | | | | | | | | - | 40 | - | - | - | - | - | - | - | - | - | - | - | - | 53 | - | 55 | - | - | | | | |
| | | | | | | | | | - | - | 60 | - | 62 | - | 64 | - | 66 | 67 | 68 | 69 | 70 | 71 | 72 | - | 74 | - | - | - | - | | |
| | | | | | | | | | - | 78 | 79 | 80 | 81 | 82 | - | 84 | 85 | 86 | 87 | 88 | 89 | 90 | 91 | - | 93 | - | - | 102 | 103 | | |
| GPEC RCPT CONN 103 CKT TOP LVR KEY 1/54 | 349931010 | 1-BLACK | IH | PLR | LT | LA | M | R | 1 | 2 | - | - | 5 | - | - | 8 | - | - | - | - | - | - | 15 | 16 | 17 | 18 | 19 | 96 | - | SALEABLE | |
| | | | | | | | | | 20 | 21 | 22 | - | 24 | - | 26 | - | - | - | - | - | - | - | 34 | - | 36 | - | 38 | - | - | | |
| | | | | | | | | | - | 40 | - | - | - | - | - | - | - | - | - | - | - | - | 53 | - | 55 | - | - | | | | |
| | | | | | | | | | - | 59 | 60 | - | 62 | - | 64 | - | 66 | 67 | 68 | 69 | 70 | 71 | 72 | - | 74 | - | - | - | - | | |
| | | | | | | | | | - | 78 | 79 | 80 | 81 | 82 | - | 84 | 85 | 86 | 87 | 88 | 89 | 90 | 91 | - | 93 | - | - | 102 | 103 | | |

molex

# GPEC IV 103 WAY RECEPTACLE SEALED ASSEMBLY MAT SEAL

## BOM AND PIN OUT SHEET

| ASSEMBLY DESCRIPTION | ASSEMBLY PART NUMBER | COMPONENT<br>THE PRESENCE OF AN ABBREVIATION INDICATES THE PRESENCE OF THAT COMPONENT. | | | | | | | BLOCKED TERMINALS<br>CAVITY WITH A NUMBER INDICATES BLOCKED TERMINAL POSITION<br>CAVITY WITHOUT A NUMBER INDICATES OPEN TERMINAL POSITION | | | | | | | | | | | | | | | | | | | | | | STATUS | COMMENTS |
|---|---|---|---|---|---|---|---|---|---|---|---|---|---|---|---|---|---|---|---|---|---|---|---|---|---|---|---|---|---|---|---|
| | | OUTER HOUSING KEY/COLOR | INNER HOUSING | PLR | LEVER | LEVER ARM (x/2) | MAT SEAL | RING SEAL | | | | | | | | | | | | | | | | | | | | | | | |
| GPEC RCPT CONN 103 CKT TOP LVR KEY 1/46 | 349931011 | 1-BLACK | IH | PLR | LT | LA | M | R | 1 | 2 | - | - | 5 | - | 7 | 8 | 9 | - | - | - | - | - | 15 | 16 | 17 | 18 | 19 | | 96 | - | SALEABLE | |
| | | | | | | | | | 20 | 21 | 22 | - | 24 | 25 | 26 | - | - | - | - | - | - | 33 | 34 | - | 36 | - | 38 | | - | - | | |
| | | | | | | | | | - | 40 | - | - | - | 44 | - | 46 | - | - | - | - | 51 | 52 | 53 | - | 55 | - | - | | | | | |
| | | | | | | | | | - | 59 | 60 | 61 | 62 | - | 64 | - | 66 | 67 | 68 | 69 | 70 | 71 | 72 | - | 74 | - | - | | - | - | | |
| | | | | | | | | | - | 78 | 79 | 80 | 81 | 82 | - | 84 | 85 | 86 | 87 | 88 | 89 | 90 | 91 | - | - | - | - | | 102 | 103 | | |
| GPEC RCPT CONN 103 CKT TOP LVR KEY 1/54 | 349931012 | 1-BLACK | IH | PLR | LT | LA | M | R | 1 | 2 | - | - | 5 | - | 7 | 8 | 9 | - | - | - | - | - | - | - | 17 | 18 | - | | 96 | - | SALEABLE | |
| | | | | | | | | | - | 21 | 22 | - | 24 | 25 | 26 | - | - | - | - | - | - | 33 | 34 | - | 36 | - | 38 | | - | - | | |
| | | | | | | | | | - | 40 | - | - | - | - | - | 46 | - | - | - | - | 51 | 52 | 53 | - | 55 | - | - | | | | | |
| | | | | | | | | | - | 59 | 60 | 61 | 62 | - | 64 | - | 66 | 67 | 68 | 69 | 70 | 71 | - | - | - | - | - | | - | - | | |
| | | | | | | | | | - | 78 | 79 | 80 | 81 | 82 | - | 84 | 85 | 86 | - | 88 | 89 | 90 | 91 | - | - | - | - | | 102 | 103 | | |
| GPEC RCPT CONN 103 CKT TOP LVR KEY 1/45 | 349931013 | 1-BLACK | IH | PLR | LT | LA | M | R | 1 | 2 | - | - | 5 | - | 7 | 8 | 9 | - | - | - | - | - | 15 | 16 | 17 | 18 | 19 | | 96 | - | SALEABLE | |
| | | | | | | | | | 20 | 21 | 22 | - | 24 | 25 | 26 | - | - | - | 30 | - | - | 33 | 34 | - | 36 | - | 38 | | - | - | | |
| | | | | | | | | | - | 40 | - | - | - | 44 | - | 46 | - | - | - | - | 51 | 52 | 53 | - | 55 | - | - | | | | | |
| | | | | | | | | | - | 59 | 60 | 61 | 62 | - | 64 | - | 66 | 67 | 68 | 69 | 70 | 71 | 72 | - | 74 | - | - | | - | - | | |
| | | | | | | | | | - | 78 | 79 | 80 | 81 | 82 | - | 84 | 85 | 86 | 87 | 88 | 89 | 90 | 91 | - | - | - | - | | 102 | 103 | | |
| GPEC RCPT CONN 103 CKT TOP LVR KEY 1/54 | 349931014 | 1-BLACK | IH | PLR | LT | LA | M | R | 1 | 2 | - | - | - | - | 7 | 8 | 9 | - | - | - | - | - | 15 | - | - | - | - | | 96 | - | SALEABLE | |
| | | | | | | | | | - | 21 | 22 | - | 24 | 25 | - | - | 28 | 29 | - | - | - | 33 | 34 | - | 36 | - | 38 | | - | - | | |
| | | | | | | | | | - | 40 | - | - | - | 44 | - | 46 | 47 | - | - | - | 51 | 52 | 53 | - | 55 | - | 57 | | | | | |
| | | | | | | | | | 58 | 59 | - | 61 | 62 | - | 64 | - | 66 | 67 | 68 | 69 | 70 | 71 | - | 73 | - | - | - | | - | - | | |
| | | | | | | | | | - | 78 | 79 | 80 | - | - | - | 84 | 85 | - | 87 | 88 | - | 90 | - | 92 | - | - | - | | 102 | 103 | | |
| GPEC RCPT CONN 103 CKT TOP LVR KEY 1/45 | 349931015 | 1-BLACK | IH | PLR | LT | LA | M | R | 1 | 2 | - | - | 5 | - | 7 | 8 | 9 | - | - | - | - | - | 15 | - | 17 | 18 | - | | 96 | - | SALEABLE | |
| | | | | | | | | | - | 21 | 22 | - | 24 | 25 | 26 | - | 28 | 29 | - | - | 32 | 33 | 34 | - | 36 | - | 38 | | - | - | | |
| | | | | | | | | | - | 40 | - | - | 43 | 44 | - | 46 | 47 | - | - | - | 51 | 52 | 53 | - | 55 | - | 57 | | | | | |
| | | | | | | | | | 58 | 59 | - | 61 | 62 | - | 64 | - | 66 | 67 | 68 | 69 | 70 | 71 | - | 73 | 74 | - | - | | - | - | | |
| | | | | | | | | | - | 78 | 79 | 80 | 81 | - | - | 84 | 85 | 86 | 87 | 88 | - | 90 | - | 92 | - | - | - | | 102 | 103 | | |
| GPEC RCPT CONN 103 CKT TOP LVR KEY 1/52 | 349931016 | 1-BLACK | IH | PLR | LT | LA | M | R | 1 | 2 | - | - | 5 | - | - | 8 | - | - | - | - | - | - | 15 | - | 17 | 18 | - | | 96 | - | SALEABLE | |
| | | | | | | | | | - | 21 | 22 | - | 24 | - | 26 | - | 28 | 29 | - | - | 32 | - | 34 | - | 36 | - | 38 | | - | - | | |
| | | | | | | | | | - | 40 | - | - | 43 | - | - | - | 47 | - | - | - | - | - | 53 | - | 55 | - | 57 | | | | | |
| | | | | | | | | | 58 | - | - | - | 62 | - | 64 | - | 66 | 67 | 68 | 69 | 70 | 71 | 72 | 73 | 74 | 75 | - | | - | - | | |
| | | | | | | | | | - | 78 | 79 | 80 | 81 | - | - | 84 | 85 | 86 | 87 | 88 | - | 90 | 91 | 92 | - | - | - | | 102 | 103 | | |
| GPEC RCPT CONN 103 CKT TOP LVR KEY 1/58 | 349931017 | 1-BLACK | IH | PLR | LT | LA | M | R | 1 | 2 | - | - | - | - | 7 | 8 | 9 | - | - | - | - | - | 15 | - | - | - | - | | 96 | - | SALEABLE | |
| | | | | | | | | | - | 21 | 22 | - | 24 | 25 | - | - | 28 | 29 | - | - | - | 33 | 34 | - | - | - | 38 | | - | - | | |
| | | | | | | | | | - | 40 | - | - | - | 44 | - | 46 | 47 | - | - | - | 51 | 52 | 53 | - | - | - | 57 | | | | | |
| | | | | | | | | | 58 | 59 | - | 61 | 62 | - | 64 | - | 66 | 67 | 68 | 69 | 70 | 71 | - | - | - | - | - | | - | - | | |
| | | | | | | | | | - | 78 | 79 | 80 | - | - | - | 84 | 85 | - | 87 | 88 | - | 90 | - | - | - | - | - | | 102 | 103 | | |
| GPEC RCPT CONN 103 CKT TOP LVR KEY 1/49 | 349931018 | 1-BLACK | IH | PLR | LT | LA | M | R | 1 | 2 | - | - | 5 | - | 7 | 8 | 9 | - | - | - | - | - | 15 | - | 17 | 18 | - | | 96 | - | SALEABLE | |
| | | | | | | | | | - | 21 | 22 | - | 24 | 25 | 26 | - | 28 | 29 | - | - | 32 | 33 | 34 | - | - | - | 38 | | - | - | | |
| | | | | | | | | | - | 40 | - | - | 43 | 44 | - | 46 | 47 | - | - | - | 51 | 52 | 53 | - | - | - | 57 | | | | | |
| | | | | | | | | | 58 | 59 | - | 61 | 62 | - | 64 | - | 66 | 67 | 68 | 69 | 70 | 71 | - | - | 74 | - | - | | - | - | | |
| | | | | | | | | | - | 78 | 79 | 80 | 81 | - | - | 84 | 85 | 86 | 87 | 88 | - | 90 | - | - | - | - | - | | 102 | 103 | | |
| GPEC RCPT CONN 103 CKT TOP LVR KEY 1/56 | 349931019 | 1-BLACK | IH | PLR | LT | LA | M | R | 1 | 2 | - | - | 5 | - | - | 8 | - | - | - | - | - | - | 15 | - | 17 | 18 | - | | 96 | - | SALEABLE | |
| | | | | | | | | | - | 21 | 22 | - | 24 | - | 26 | - | 28 | 29 | - | - | 32 | - | 34 | - | - | - | 38 | | - | - | | |
| | | | | | | | | | - | 40 | - | - | 43 | - | - | - | 47 | - | - | - | - | - | 53 | - | - | - | 57 | | | | | |
| | | | | | | | | | 58 | - | - | - | 62 | - | 64 | - | 66 | 67 | 68 | 69 | 70 | 71 | 72 | - | 74 | 75 | - | | - | - | | |
| | | | | | | | | | - | 78 | 79 | 80 | 81 | - | - | 84 | 85 | 86 | 87 | 88 | - | 90 | 91 | - | - | - | - | | 102 | 103 | | |
| GPEC RCPT CONN 103 CKT TOP LVR KEY 1/44 | 349931020 | 1-BLACK | IH | PLR | LT | LA | M | R | 1 | 2 | - | - | - | - | 7 | 8 | 9 | - | - | - | 13 | - | 15 | - | 17 | 18 | - | | 96 | - | SALEABLE | |
| | | | | | | | | | - | 21 | 22 | - | 24 | 25 | 26 | - | 28 | 29 | - | - | - | 33 | 34 | 35 | 36 | 37 | 38 | | - | - | | |
| | | | | | | | | | - | 40 | - | - | - | 44 | 45 | 46 | 47 | - | - | - | 51 | 52 | 53 | 54 | 55 | 56 | 57 | | | | | |
| | | | | | | | | | 58 | 59 | 60 | 61 | 62 | - | 64 | - | - | 67 | - | 69 | 70 | 71 | - | 73 | - | - | - | | - | - | | |
| | | | | | | | | | - | - | 79 | 80 | 81 | 82 | - | 84 | 85 | 86 | 87 | 88 | - | 90 | - | 92 | - | - | - | | 102 | 103 | | |

molex

# GPEC IV 103 WAY RECEPTACLE SEALED ASSEMBLY MAT SEAL

## BOM AND PIN OUT SHEET

| ASSEMBLY DESCRIPTION | ASSEMBLY PART NUMBER | COMPONENT<br>THE PRESENCE OF AN ABBREVIATION INDICATES THE PRESENCE OF THAT COMPONENT. | | | | | | | BLOCKED TERMINALS<br>CAVITY WITH A NUMBER INDICATES BLOCKED TERMINAL POSITION<br>CAVITY WITHOUT A NUMBER INDICATES OPEN TERMINAL POSITION | | | | | | | | | | | | | | | | | | | | | | STATUS | COMMENTS |
|---|---|---|---|---|---|---|---|---|---|---|---|---|---|---|---|---|---|---|---|---|---|---|---|---|---|---|---|---|---|---|---|
| | | OUTER HOUSING KEY/COLOR | INNER HOUSING | PLR | LEVER | LEVER ARM (x/2) | MAT SEAL | RING SEAL | | | | | | | | | | | | | | | | | | | | | | | |
| GPEC RCPT CONN 103 CKT TOP LVR KEY 1/41 | 349931021 | 1-BLACK | IH | PLR | LT | LA | M | R | 1 | 2 | - | - | 5 | - | 7 | 8 | 9 | - | 11 | - | 13 | - | 15 | - | 17 | 18 | - | | 96 | - | SALEABLE | |
| | | | | | | | | | - | 21 | 22 | - | 24 | 25 | 26 | - | 28 | 29 | - | - | - | 33 | 34 | 35 | 36 | 37 | 38 | | - | - | | |
| | | | | | | | | | - | 40 | - | - | 43 | 44 | 45 | 46 | 47 | - | - | - | 51 | 52 | 53 | 54 | 55 | 56 | 57 | | | | | |
| | | | | | | | | | 58 | 59 | 60 | 61 | 62 | - | 64 | - | - | 67 | - | 69 | 70 | 71 | - | 73 | - | - | - | | - | - | | |
| | | | | | | | | | - | - | 79 | 80 | 81 | 82 | - | 84 | 85 | 86 | 87 | 88 | - | 90 | - | 92 | - | - | - | | 102 | 103 | | |
| GPEC RCPT CONN 103 CKT TOP LVR KEY 1/47 | 349931022 | 1-BLACK | IH | PLR | LT | LA | M | R | 1 | 2 | - | - | - | - | 7 | 8 | 9 | - | - | - | 13 | - | 15 | - | 17 | 18 | - | | 96 | - | SALEABLE | |
| | | | | | | | | | - | 21 | 22 | - | 24 | 25 | 26 | - | - | 29 | - | - | - | 33 | 34 | 35 | - | 37 | 38 | | - | - | | |
| | | | | | | | | | - | 40 | - | - | - | 44 | 45 | 46 | 47 | - | - | - | 51 | 52 | 53 | 54 | - | 56 | 57 | | | | | |
| | | | | | | | | | 58 | 59 | 60 | 61 | 62 | - | 64 | - | - | 67 | - | 69 | 70 | 71 | - | 73 | - | - | - | | - | - | | |
| | | | | | | | | | - | - | 79 | 80 | 81 | 82 | - | 84 | 85 | 86 | 87 | 88 | - | 90 | - | 92 | - | - | - | | 102 | 103 | | |
| GPEC RCPT CONN 103 CKT TOP LVR KEY 1/44 | 349931023 | 1-BLACK | IH | PLR | LT | LA | M | R | 1 | 2 | - | - | 5 | - | 7 | 8 | 9 | - | 11 | - | 13 | - | 15 | - | 17 | 18 | - | | 96 | - | SALEABLE | |
| | | | | | | | | | - | 21 | 22 | - | 24 | 25 | 26 | - | - | 29 | - | - | - | 33 | 34 | 35 | - | 37 | 38 | | - | - | | |
| | | | | | | | | | - | 40 | - | - | 43 | 44 | 45 | 46 | 47 | - | - | - | 51 | 52 | 53 | 54 | - | 56 | 57 | | | | | |
| | | | | | | | | | 58 | 59 | 60 | 61 | 62 | - | 64 | - | - | 67 | - | 69 | 70 | 71 | - | 73 | - | - | - | | - | - | | |
| | | | | | | | | | - | - | 79 | 80 | 81 | 82 | - | 84 | 85 | 86 | 87 | 88 | - | 90 | - | 92 | - | - | - | | 102 | 103 | | |
| GPEC RCPT CONN 103 CKT TOP LVR KEY 1/47 | 349931024 | 1-BLACK | IH | PLR | LT | LA | M | R | 1 | 2 | - | - | - | 6 | 7 | 8 | 9 | 10 | - | - | 13 | - | 15 | - | 17 | 18 | - | | 96 | - | SALEABLE | |
| | | | | | | | | | - | 21 | 22 | - | 24 | 25 | 26 | 27 | 28 | 29 | - | - | - | 33 | 34 | - | 36 | - | 38 | | - | - | | |
| | | | | | | | | | - | 40 | - | - | - | 44 | 45 | 46 | 47 | - | - | - | 51 | 52 | 53 | - | 55 | 56 | 57 | | | | | |
| | | | | | | | | | 58 | 59 | - | 61 | 62 | - | 64 | 65 | - | 67 | - | - | 70 | 71 | - | 73 | - | - | - | | - | - | | |
| | | | | | | | | | - | - | 79 | 80 | - | 82 | 83 | - | 85 | 86 | 87 | - | - | 90 | - | 92 | - | - | - | | 102 | 103 | | |
| GPEC RCPT CONN 103 CKT TOP LVR KEY 1/50 | 349931025 | 1-BLACK | IH | PLR | LT | LA | M | R | 1 | 2 | - | - | - | 6 | 7 | 8 | 9 | 10 | - | - | 13 | - | 15 | - | 17 | 18 | - | | 96 | - | SALEABLE | |
| | | | | | | | | | - | 21 | 22 | - | 24 | 25 | 26 | 27 | - | 29 | - | - | - | 33 | 34 | - | - | - | 38 | | - | - | | |
| | | | | | | | | | - | 40 | - | - | - | 44 | 45 | 46 | 47 | - | - | - | 51 | 52 | 53 | - | - | 56 | 57 | | | | | |
| | | | | | | | | | 58 | 59 | - | 61 | 62 | - | 64 | 65 | - | 67 | - | - | 70 | 71 | - | 73 | - | - | - | | - | - | | |
| | | | | | | | | | - | - | 79 | 80 | - | 82 | 83 | - | 85 | 86 | 87 | - | - | 90 | - | 92 | - | - | - | | 102 | 103 | | |
| GPEC RCPT CONN 103 CKT TOP LVR KEY 1/49 | 349931026 | 1-BLACK | IH | PLR | LT | LA | M | R | 1 | - | - | - | - | 6 | 7 | 8 | 9 | 10 | - | - | 13 | - | - | - | 17 | - | - | | 96 | - | SALEABLE | |
| | | | | | | | | | - | 21 | 22 | - | 24 | 25 | 26 | 27 | 28 | 29 | - | - | - | 33 | 34 | - | 36 | - | 38 | | - | - | | |
| | | | | | | | | | - | 40 | - | - | - | 44 | 45 | 46 | 47 | - | - | - | 51 | 52 | 53 | - | 55 | 56 | 57 | | | | | |
| | | | | | | | | | 58 | 59 | - | 61 | 62 | - | 64 | 65 | - | 67 | - | - | 70 | 71 | - | 73 | - | - | - | | - | - | | |
| | | | | | | | | | - | - | 79 | 80 | - | 82 | 83 | - | 85 | 86 | 87 | - | - | 90 | - | 92 | - | 94 | - | | 102 | 103 | | |
| GPEC RCPT CONN 103 CKT TOP LVR KEY 1/37 | 349931027 | 1-BLACK | IH | PLR | LT | LA | M | R | 1 | 2 | - | - | 5 | - | 7 | 8 | 9 | - | 11 | - | 13 | - | 15 | - | 17 | 18 | - | | 96 | - | SALEABLE | |
| | | | | | | | | | - | 21 | 22 | - | 24 | 25 | 26 | - | 28 | 29 | - | - | 32 | 33 | 34 | 35 | 36 | 37 | - | | - | - | | |
| | | | | | | | | | - | 40 | - | - | 43 | 44 | 45 | 46 | 47 | 48 | - | - | 51 | 52 | 53 | 54 | 55 | 56 | 57 | | | | | |
| | | | | | | | | | 58 | 59 | 60 | 61 | 62 | - | 64 | 65 | 66 | 67 | - | 69 | 70 | 71 | - | 73 | 74 | - | - | | - | - | | |
| | | | | | | | | | - | - | - | - | 81 | 82 | - | 84 | 85 | 86 | 87 | 88 | 89 | 90 | - | 92 | - | 94 | - | | 102 | 103 | | |
| GPEC RCPT CONN 103 CKT TOP LVR KEY 1/55 | 349931028 | 1-BLACK | IH | PLR | LT | LA | M | R | 1 | - | - | - | 5 | - | - | 8 | - | - | - | - | - | - | - | - | 17 | 18 | - | | 96 | - | SALEABLE | |
| | | | | | | | | | - | 21 | 22 | - | 24 | - | 26 | - | - | 29 | - | - | 32 | - | 34 | - | 36 | - | 38 | | - | - | | |
| | | | | | | | | | - | 40 | - | - | 43 | - | - | - | 47 | - | - | - | - | - | 53 | - | 55 | - | 57 | | | | | |
| | | | | | | | | | 58 | 59 | - | - | 62 | - | 64 | - | 66 | 67 | 68 | 69 | 70 | 71 | 72 | 73 | 74 | 75 | - | | - | - | | |
| | | | | | | | | | - | 78 | 79 | 80 | 81 | - | - | - | 85 | 86 | 87 | 88 | - | 90 | 91 | 92 | - | - | - | | 102 | 103 | | |
| GPEC RCPT CONN 103 CKT TOP LVR KEY 1/49 | 349931029 | 1-BLACK | IH | PLR | LT | LA | M | R | 1 | - | - | - | 5 | - | 7 | 8 | 9 | - | - | - | - | - | - | - | 17 | 18 | - | | 96 | - | SALEABLE | |
| | | | | | | | | | - | 21 | 22 | - | 24 | 25 | 26 | - | - | 29 | - | - | 32 | 33 | 34 | - | 36 | - | 38 | | - | - | | |
| | | | | | | | | | - | 40 | - | - | 43 | 44 | - | 46 | 47 | - | - | - | 51 | 52 | 53 | - | 55 | - | 57 | | | | | |
| | | | | | | | | | 58 | 59 | - | 61 | 62 | - | 64 | - | 66 | 67 | 68 | 69 | 70 | 71 | - | 73 | 74 | - | - | | - | - | | |
| | | | | | | | | | - | 78 | 79 | 80 | 81 | - | - | - | 85 | 86 | 87 | 88 | - | 90 | - | 92 | - | - | - | | 102 | 103 | | |
| GPEC RCPT CONN 103 CKT TOP LVR KEY 1/51 | 349931030 | 1-BLACK | IH | PLR | LT | LA | M | R | 1 | 2 | - | - | 5 | - | - | 8 | - | - | - | - | - | - | 15 | - | 17 | 18 | - | | 96 | - | SALEABLE | |
| | | | | | | | | | - | 21 | 22 | - | 24 | - | 26 | - | 28 | 29 | - | - | 32 | - | 34 | - | 36 | - | 38 | | - | - | | |
| | | | | | | | | | - | 40 | - | - | 43 | - | - | - | 47 | - | - | - | - | - | 53 | - | 55 | - | 57 | | | | | |
| | | | | | | | | | 58 | 59 | - | - | 62 | - | 64 | - | 66 | 67 | 68 | 69 | 70 | 71 | 72 | 73 | 74 | 75 | - | | - | - | | |
| | | | | | | | | | - | 78 | 79 | 80 | 81 | - | - | 84 | 85 | 86 | 87 | 88 | - | 90 | 91 | 92 | - | - | - | | 102 | 103 | | |

molex

# GPEC IV 103 WAY RECEPTACLE SEALED ASSEMBLY MAT SEAL

## BOM AND PIN OUT SHEET

| ASSEMBLY DESCRIPTION | ASSEMBLY PART NUMBER | COMPONENT<br>THE PRESENCE OF AN ABBREVIATION INDICATES THE PRESENCE OF THAT COMPONENT. | | | | | | | BLOCKED TERMINALS<br>CAVITY WITH A NUMBER INDICATES BLOCKED TERMINAL POSITION<br>CAVITY WITHOUT A NUMBER INDICATES OPEN TERMINAL POSITION | | | | | | | | | | | | | | | | | | | | | | | STATUS | COMMENTS |
|---|---|---|---|---|---|---|---|---|---|---|---|---|---|---|---|---|---|---|---|---|---|---|---|---|---|---|---|---|---|---|---|---|
| | | OUTER HOUSING KEY/COLOR | INNER HOUSING | PLR | LEVER | LEVER ARM (x/2) | MAT SEAL | RING SEAL | | | | | | | | | | | | | | | | | | | | | | | | |
| GPEC RCPT CONN 103 CKT TOP LVR KEY 1/55 | 349931031 | 1-BLACK | IH | PLR | LT | LA | M | R | 1 | 2 | - | - | 5 | - | - | 8 | - | - | - | - | - | - | 15 | - | 17 | 18 | - | | 96 | - | SALEABLE | |
| | | | | | | | | | - | 21 | 22 | - | 24 | - | 26 | - | 28 | 29 | - | - | 32 | - | 34 | - | - | - | 38 | | - | - | | |
| | | | | | | | | | - | 40 | - | - | 43 | - | - | - | 47 | - | - | - | - | - | 53 | - | - | - | 57 | | | | | |
| | | | | | | | | | 58 | 59 | - | - | 62 | - | 64 | - | 66 | 67 | 68 | 69 | 70 | 71 | 72 | - | 74 | 75 | - | | - | - | | |
| | | | | | | | | | - | 78 | 79 | 80 | 81 | - | - | 84 | 85 | 86 | 87 | 88 | - | 90 | 91 | - | - | - | - | | 102 | 103 | | |
| GPEC RCPT CONN 103 CKT TOP LVR KEY 1/59 | 349931032 | 1-BLACK | IH | PLR | LT | LA | M | R | 1 | - | - | - | 5 | - | - | 8 | - | - | - | - | - | - | - | - | 17 | 18 | - | | 96 | - | SALEABLE | |
| | | | | | | | | | - | 21 | 22 | - | 24 | - | 26 | - | - | 29 | - | - | 32 | - | 34 | - | - | - | 38 | | - | - | | |
| | | | | | | | | | - | 40 | - | - | 43 | - | - | - | 47 | - | - | - | - | - | 53 | - | - | - | 57 | | | | | |
| | | | | | | | | | 58 | 59 | - | - | 62 | - | 64 | - | 66 | 67 | 68 | 69 | 70 | 71 | 72 | - | 74 | 75 | - | | - | - | | |
| | | | | | | | | | - | 78 | 79 | 80 | 81 | - | - | - | 85 | 86 | 87 | 88 | - | 90 | 91 | - | - | - | - | | 102 | 103 | | |
| GPEC RCPT CONN 103 CKT TOP LVR KEY 1/53 | 349931033 | 1-BLACK | IH | PLR | LT | LA | M | R | 1 | - | - | - | 5 | - | 7 | 8 | 9 | - | - | - | - | - | - | - | 17 | 18 | - | | 96 | - | SALEABLE | |
| | | | | | | | | | - | 21 | 22 | - | 24 | 25 | 26 | - | - | 29 | - | - | 32 | 33 | 34 | - | - | - | 38 | | - | - | | |
| | | | | | | | | | - | 40 | - | - | 43 | 44 | - | 46 | 47 | - | - | - | 51 | 52 | 53 | - | - | - | 57 | | | | | |
| | | | | | | | | | 58 | 59 | - | 61 | 62 | - | 64 | - | 66 | 67 | 68 | 69 | 70 | 71 | - | - | 74 | - | - | | - | - | | |
| | | | | | | | | | - | 78 | 79 | 80 | 81 | - | - | - | 85 | 86 | 87 | 88 | - | 90 | - | - | - | - | - | | 102 | 103 | | |
| GPEC RCPT CONN 103 CKT TOP LVR KEY 1/57 | 349931034 | 1-BLACK | IH | PLR | LT | LA | M | R | - | - | - | - | - | 6 | 7 | 8 | 9 | 10 | 11 | 12 | - | - | - | - | - | - | - | | 96 | - | SALEABLE | |
| | | | | | | | | | - | 21 | 22 | - | - | - | - | 27 | - | 29 | - | - | - | - | - | - | - | - | - | | 98 | - | | |
| | | | | | | | | | - | - | 41 | 42 | 43 | 44 | 45 | 46 | 47 | 48 | 49 | 50 | 51 | 52 | - | - | - | - | 57 | | | | | |
| | | | | | | | | | - | 59 | - | - | - | - | 64 | 65 | - | 67 | 68 | 69 | - | - | 72 | 73 | 74 | 75 | 76 | | - | 101 | | |
| | | | | | | | | | - | 78 | - | 80 | - | - | - | 84 | 85 | - | - | - | - | - | - | - | 93 | 94 | 95 | | - | 103 | | |
| GPEC RCPT CONN 103 CKT TOP LVR KEY 1/58 | 349931035 | 1-BLACK | IH | PLR | LT | LA | M | R | - | - | - | - | - | 6 | 7 | 8 | 9 | 10 | 11 | - | - | - | - | - | - | - | - | | 96 | - | SALEABLE | |
| | | | | | | | | | - | 21 | 22 | - | - | - | - | 27 | - | 29 | - | - | - | - | - | - | - | - | - | | 98 | - | | |
| | | | | | | | | | - | - | 41 | 42 | 43 | 44 | 45 | 46 | 47 | 48 | 49 | 50 | 51 | 52 | - | - | - | - | 57 | | | | | |
| | | | | | | | | | - | 59 | - | - | - | - | 64 | 65 | - | 67 | 68 | 69 | - | - | 72 | 73 | 74 | 75 | 76 | | - | 101 | | |
| | | | | | | | | | - | 78 | - | 80 | - | - | - | 84 | 85 | - | - | - | - | - | - | - | 93 | 94 | 95 | | - | 103 | | |
| GPEC RCPT CONN 103 CKT TOP LVR KEY 1/48 | 349931036 | 1-BLACK | IH | PLR | LT | LA | M | R | 1 | - | - | - | 5 | 6 | 7 | 8 | 9 | 10 | 11 | - | 13 | - | - | - | 17 | - | - | | 96 | - | SALEABLE | |
| | | | | | | | | | - | 21 | 22 | - | 24 | 25 | 26 | 27 | 28 | 29 | - | - | - | 33 | 34 | - | 36 | - | 38 | | - | - | | |
| | | | | | | | | | - | 40 | - | - | 43 | 44 | 45 | 46 | 47 | - | - | - | 51 | 52 | 53 | - | 55 | 56 | 57 | | | | | |
| | | | | | | | | | 58 | 59 | - | 61 | - | - | 64 | 65 | - | 67 | - | - | 70 | 71 | - | 73 | - | - | - | | - | - | | |
| | | | | | | | | | - | - | 79 | 80 | - | 82 | 83 | - | 85 | 86 | 87 | - | - | 90 | - | 92 | - | - | - | | 102 | 103 | | |
| GPEC RCPT CONN 103 CKT TOP LVR KEY 1/51 | 349931037 | 1-BLACK | IH | PLR | LT | LA | M | R | 1 | - | - | - | 5 | 6 | 7 | 8 | 9 | 10 | 11 | - | 13 | - | - | - | 17 | - | - | | 96 | - | SALEABLE | |
| | | | | | | | | | - | 21 | 22 | - | 24 | 25 | 26 | 27 | - | 29 | - | - | - | 33 | 34 | - | - | - | 38 | | - | - | | |
| | | | | | | | | | - | 40 | - | - | 43 | 44 | 45 | 46 | 47 | - | - | - | 51 | 52 | 53 | - | - | 56 | 57 | | | | | |
| | | | | | | | | | 58 | 59 | - | 61 | - | - | 64 | 65 | - | 67 | - | - | 70 | 71 | - | 73 | - | - | - | | - | - | | |
| | | | | | | | | | - | - | 79 | 80 | - | 82 | 83 | - | 85 | 86 | 87 | - | - | 90 | - | 92 | - | - | - | | 102 | 103 | | |
| GPEC RCPT CONN 103 CKT TOP LVR KEY 1/45 | 349931038 | 1-BLACK | IH | PLR | LT | LA | M | R | 1 | 2 | - | - | 5 | 6 | 7 | 8 | 9 | 10 | 11 | - | 13 | - | 15 | - | 17 | 18 | - | | 96 | - | SALEABLE | |
| | | | | | | | | | - | 21 | 22 | - | 24 | 25 | 26 | 27 | 28 | 29 | - | - | - | 33 | 34 | - | 36 | - | 38 | | - | - | | |
| | | | | | | | | | - | 40 | - | - | 43 | 44 | 45 | 46 | 47 | - | - | - | 51 | 52 | 53 | - | 55 | 56 | 57 | | | | | |
| | | | | | | | | | 58 | 59 | - | 61 | - | - | 64 | 65 | - | 67 | - | - | 70 | 71 | - | 73 | - | - | - | | - | - | | |
| | | | | | | | | | - | - | 79 | 80 | - | 82 | 83 | - | 85 | 86 | 87 | - | - | 90 | - | 92 | - | - | - | | 102 | 103 | | |
| GPEC RCPT CONN 103 CKT TOP LVR KEY 1/48 | 349931039 | 1-BLACK | IH | PLR | LT | LA | M | R | 1 | 2 | - | - | 5 | 6 | 7 | 8 | 9 | 10 | 11 | - | 13 | - | 15 | - | 17 | 18 | - | | 96 | - | SALEABLE | |
| | | | | | | | | | - | 21 | 22 | - | 24 | 25 | 26 | 27 | - | 29 | - | - | - | 33 | 34 | - | - | - | 38 | | - | - | | |
| | | | | | | | | | - | 40 | - | - | 43 | 44 | 45 | 46 | 47 | - | - | - | 51 | 52 | 53 | - | - | 56 | 57 | | | | | |
| | | | | | | | | | 58 | 59 | - | 61 | - | - | 64 | 65 | - | 67 | - | - | 70 | 71 | - | 73 | - | - | - | | - | - | | |
| | | | | | | | | | - | - | 79 | 80 | - | 82 | 83 | - | 85 | 86 | 87 | - | - | 90 | - | 92 | - | - | - | | 102 | 103 | | |
| GPEC RCPT CONN 103 CKT TOP LVR KEY 1/46 | 349931040 | 1-BLACK | IH | PLR | LT | LA | M | R | - | - | - | 4 | 5 | 6 | 7 | 8 | 9 | 10 | 11 | 12 | - | - | 15 | - | - | - | - | | 96 | - | SALEABLE | |
| | | | | | | | | | - | 21 | 22 | 23 | - | - | - | 27 | - | 29 | 30 | 31 | - | 33 | - | 35 | - | - | - | | 98 | - | | |
| | | | | | | | | | - | - | 41 | 42 | 43 | 44 | 45 | 46 | 47 | 48 | 49 | 50 | 51 | 52 | - | - | - | - | 57 | | | | | |
| | | | | | | | | | - | 59 | - | 61 | - | - | - | 65 | - | 67 | 68 | - | 70 | - | 72 | 73 | 74 | 75 | 76 | | 100 | 101 | | |
| | | | | | | | | | - | 78 | - | 80 | - | 82 | - | 84 | 85 | - | - | - | - | - | - | - | 93 | 94 | 95 | | 102 | 103 | | |

molex

# GPEC IV 103 WAY RECEPTACLE SEALED ASSEMBLY MAT SEAL

## BOM AND PIN OUT SHEET

| ASSEMBLY DESCRIPTION | ASSEMBLY PART NUMBER | COMPONENT<br>THE PRESENCE OF AN ABBREVIATION INDICATES THE PRESENCE OF THAT COMPONENT. | | | | | | | BLOCKED TERMINALS<br>CAVITY WITH A NUMBER INDICATES BLOCKED TERMINAL POSITION<br>CAVITY WITHOUT A NUMBER INDICATES OPEN TERMINAL POSITION | | | | | | | | | | | | | | | | | | | | | | STATUS | COMMENTS |
|---|---|---|---|---|---|---|---|---|---|---|---|---|---|---|---|---|---|---|---|---|---|---|---|---|---|---|---|---|---|---|---|
| | | OUTER HOUSING KEY/COLOR | INNER HOUSING | PLR | LEVER | LEVER ARM (x/2) | MAT SEAL | RING SEAL | | | | | | | | | | | | | | | | | | | | | | | |
| GPEC RCPT CONN 103 CKT TOP LVR KEY 1/50 | 349931041 | 1-BLACK | IH | PLR | LT | LA | M | R | - | - | - | - | - | 6 | 7 | 8 | 9 | 10 | 11 | 12 | - | - | 15 | - | - | - | - | | 96 | - | SALEABLE | |
| | | | | | | | | | - | 21 | 22 | 23 | - | - | - | 27 | - | 29 | - | - | - | 33 | - | - | - | - | | 98 | - | | |
| | | | | | | | | | - | - | 41 | 42 | 43 | 44 | 45 | 46 | 47 | 48 | 49 | 50 | 51 | 52 | - | - | - | - | 57 | | | | |
| | | | | | | | | | - | 59 | - | - | - | - | 64 | 65 | 66 | 67 | 68 | 69 | - | - | 72 | 73 | 74 | 75 | 76 | | - | 101 | |
| | | | | | | | | | 77 | 78 | 79 | 80 | - | - | - | 84 | 85 | 86 | - | - | - | - | - | - | 93 | 94 | 95 | | - | 103 | |
| GPEC RCPT CONN 103 CKT TOP LVR KEY 1/47 | 349931042 | 1-BLACK | IH | PLR | LT | LA | M | R | 1 | 2 | - | - | - | - | 7 | 8 | 9 | - | - | - | - | - | 15 | - | 17 | 18 | - | | 96 | - | SALEABLE | |
| | | | | | | | | | - | 21 | 22 | - | 24 | 25 | - | - | 28 | 29 | - | - | 32 | 33 | 34 | - | 36 | - | 38 | | - | - | | |
| | | | | | | | | | - | 40 | - | - | 43 | 44 | - | 46 | 47 | - | - | - | 51 | 52 | 53 | - | 55 | - | 57 | | | | | |
| | | | | | | | | | 58 | 59 | - | 61 | 62 | - | 64 | - | 66 | 67 | 68 | 69 | 70 | 71 | - | 73 | 74 | - | - | | - | - | | |
| | | | | | | | | | - | 78 | 79 | 80 | 81 | - | - | 84 | 85 | 86 | 87 | 88 | - | 90 | - | 92 | - | - | - | | 102 | 103 | | |
| GPEC RCPT CONN 103 CKT TOP LVR KEY 1/51 | 349931043 | 1-BLACK | IH | PLR | LT | LA | M | R | 1 | 2 | - | - | - | - | 7 | 8 | 9 | - | - | - | - | - | 15 | - | 17 | 18 | - | | 96 | - | SALEABLE | |
| | | | | | | | | | - | 21 | 22 | - | 24 | 25 | - | - | 28 | 29 | - | - | 32 | 33 | 34 | - | - | - | 38 | | - | - | | |
| | | | | | | | | | - | 40 | - | - | 43 | 44 | - | 46 | 47 | - | - | - | 51 | 52 | 53 | - | - | - | 57 | | | | | |
| | | | | | | | | | 58 | 59 | - | 61 | 62 | - | 64 | - | 66 | 67 | 68 | 69 | 70 | 71 | - | - | 74 | - | - | | - | - | | |
| | | | | | | | | | - | 78 | 79 | 80 | 81 | - | - | 84 | 85 | 86 | 87 | 88 | - | 90 | - | - | - | - | - | | 102 | 103 | | |
| GPEC RCPT CONN 103 CKT TOP LVR KEY 1/44 | 349931044 | 1-BLACK | IH | PLR | LT | LA | M | R | - | 2 | 3 | - | 5 | 6 | 7 | 8 | 9 | - | 11 | - | 13 | 14 | 15 | - | 17 | 18 | - | | - | - | SALEABLE | |
| | | | | | | | | | - | - | 22 | - | - | 25 | - | - | - | 29 | - | - | - | 33 | 34 | 35 | - | 37 | 38 | | - | - | | |
| | | | | | | | | | - | - | 41 | - | 43 | 44 | 45 | 46 | 47 | - | - | - | 51 | 52 | 53 | 54 | - | 56 | 57 | | | | | |
| | | | | | | | | | - | 59 | 60 | 61 | 62 | - | 64 | 65 | - | 67 | - | 69 | 70 | 71 | 72 | 73 | - | - | - | | - | - | | |
| | | | | | | | | | - | - | 79 | 80 | 81 | - | 83 | 84 | 85 | 86 | 87 | - | - | 90 | 91 | 92 | - | 94 | - | | 102 | 103 | | |
| GPEC RCPT CONN 103 CKT TOP LVR KEY 1/69 | 349931045 | 1-BLACK | IH | PLR | LT | LA | M | R | - | - | - | - | 5 | 6 | 7 | - | 9 | - | 11 | - | 13 | - | - | - | - | - | - | | - | - | SALEABLE | |
| | | | | | | | | | - | - | 22 | - | - | 25 | - | - | - | 29 | - | - | - | 33 | 34 | - | - | - | 38 | | - | - | | |
| | | | | | | | | | - | - | - | - | 43 | 44 | 45 | 46 | 47 | - | - | - | 51 | 52 | 53 | - | - | 56 | 57 | | | | | |
| | | | | | | | | | - | 59 | - | 61 | - | - | 64 | 65 | - | - | - | - | - | 71 | - | 73 | - | - | - | | - | - | | |
| | | | | | | | | | - | - | 79 | 80 | - | - | - | - | 85 | - | - | - | - | - | - | 92 | - | - | - | | 102 | 103 | | |
| GPEC RCPT CONN 103 CKT END LVR KEY 2/103 | 349932001 | 2-BLACK | IH | PLR | LE | LA | M | R | - | - | - | - | - | - | - | - | - | - | - | - | - | - | - | - | - | - | - | | - | - | SALEABLE | |
| | | | | | | | | | - | - | - | - | - | - | - | - | - | - | - | - | - | - | - | - | - | - | - | | - | - | | |
| | | | | | | | | | - | - | - | - | - | - | - | - | - | - | - | - | - | - | - | - | - | - | - | | | | | |
| | | | | | | | | | - | - | - | - | - | - | - | - | - | - | - | - | - | - | - | - | - | - | - | | - | - | | |
| | | | | | | | | | - | - | - | - | - | - | - | - | - | - | - | - | - | - | - | - | - | - | - | | - | - | | |
| GPEC RCPT CONN 103 CKT END LVR KEY 2/56 | 349932002 | 2-BLACK | IH | PLR | LE | LA | M | R | - | - | - | - | - | 6 | 7 | 8 | 9 | 10 | 11 | 12 | 13 | - | - | - | - | - | - | | 96 | - | SALEABLE | |
| | | | | | | | | | - | - | - | 23 | - | - | - | - | 28 | - | - | 31 | - | - | - | 35 | - | - | - | | 98 | - | | |
| | | | | | | | | | 39 | 40 | - | - | 43 | 44 | 45 | 46 | 47 | 48 | - | - | - | - | - | - | - | - | 57 | | | | | |
| | | | | | | | | | 58 | - | 60 | 61 | 62 | 63 | 64 | 65 | - | - | 68 | 69 | - | 71 | - | 73 | 74 | - | - | | - | - | | |
| | | | | | | | | | 77 | 78 | - | 80 | 81 | 82 | 83 | 84 | 85 | - | 87 | 88 | - | 90 | 91 | - | - | - | - | | - | - | | |
| GPEC RCPT CONN 103 CKT TOP LVR KEY 2/103 | 349933001 | 2-BLACK | IH | PLR | LT | LA | M | R | - | - | - | - | - | - | - | - | - | - | - | - | - | - | - | - | - | - | - | | - | - | SALEABLE | |
| | | | | | | | | | - | - | - | - | - | - | - | - | - | - | - | - | - | - | - | - | - | - | - | | - | - | | |
| | | | | | | | | | - | - | - | - | - | - | - | - | - | - | - | - | - | - | - | - | - | - | - | | - | - | | |
| | | | | | | | | | - | - | - | - | - | - | - | - | - | - | - | - | - | - | - | - | - | - | - | | - | - | | |
| | | | | | | | | | - | - | - | - | - | - | - | - | - | - | - | - | - | - | - | - | - | - | - | | - | - | | |
| GPEC RCPT CONN 103 CKT END LVR KEY 3/103 | 349934001 | 3-BLACK | IH | PLR | LE | LA | M | R | - | - | - | - | - | - | - | - | - | - | - | - | - | - | - | - | - | - | - | | - | - | SALEABLE | |
| | | | | | | | | | - | - | - | - | - | - | - | - | - | - | - | - | - | - | - | - | - | - | - | | - | - | | |
| | | | | | | | | | - | - | - | - | - | - | - | - | - | - | - | - | - | - | - | - | - | - | - | | - | - | | |
| | | | | | | | | | - | - | - | - | - | - | - | - | - | - | - | - | - | - | - | - | - | - | - | | - | - | | |
| | | | | | | | | | - | - | - | - | - | - | - | - | - | - | - | - | - | - | - | - | - | - | - | | - | - | | |
| GPEC RCPT CONN 103 CKT END LVR KEY 3/89 | 349934002 | 3-BLACK | IH | PLR | LE | LA | M | R | 1 | - | - | 4 | 5 | - | - | - | - | - | - | - | - | - | - | - | - | - | - | | - | - | SALEABLE | |
| | | | | | | | | | - | - | - | - | 24 | - | - | - | - | - | - | - | - | - | - | - | - | - | - | | - | - | | |
| | | | | | | | | | - | - | - | - | - | - | - | 46 | 47 | 48 | - | - | - | - | - | - | - | 56 | 57 | | | | | |
| | | | | | | | | | - | - | - | 61 | - | - | - | - | - | - | - | - | - | 71 | - | - | - | - | - | | - | - | | |
| | | | | | | | | | - | - | - | - | - | - | - | - | - | 86 | - | - | - | 90 | 91 | - | - | - | - | | - | - | | |

molex

# GPEC IV 103 WAY RECEPTACLE SEALED ASSEMBLY MAT SEAL

## BOM AND PIN OUT SHEET

| ASSEMBLY DESCRIPTION | ASSEMBLY PART NUMBER | COMPONENT<br>THE PRESENCE OF AN ABBREVIATION INDICATES THE PRESENCE OF THAT COMPONENT. | | | | | | | BLOCKED TERMINALS<br>CAVITY WITH A NUMBER INDICATES BLOCKED TERMINAL POSITION<br>CAVITY WITHOUT A NUMBER INDICATES OPEN TERMINAL POSITION | | | | | | | | | | | | | | | | | | | | | | | STATUS | COMMENTS |
|---|---|---|---|---|---|---|---|---|---|---|---|---|---|---|---|---|---|---|---|---|---|---|---|---|---|---|---|---|---|---|---|---|
| | | OUTER HOUSING KEY/COLOR | INNER HOUSING | PLR | LEVER | LEVER ARM (x/2) | MAT SEAL | RING SEAL | | | | | | | | | | | | | | | | | | | | | | | | |
| GPEC RCPT CONN 103 CKT END LVR KEY 3/68 | 349934003 | 3-BLACK | IH | PLR | LE | LA | M | R | 1 | - | 3 | - | 5 | - | 7 | 8 | - | - | - | - | - | - | - | 17 | - | - | | - | - | SALEABLE | |
| | | | | | | | | | 20 | - | - | - | 24 | - | - | - | - | - | - | - | 32 | - | - | 35 | 36 | 37 | - | - | - | | |
| | | | | | | | | | - | 40 | - | - | - | - | - | 46 | 47 | 48 | - | - | - | - | - | - | - | 56 | 57 | | | | |
| | | | | | | | | | - | - | 60 | 61 | 62 | 63 | 64 | - | - | 67 | - | - | - | 71 | - | - | - | - | 76 | - | - | | |
| | | | | | | | | | 77 | - | - | - | 81 | - | - | - | - | 86 | 87 | - | 89 | 90 | 91 | 92 | - | - | 95 | - | - | | |
| GPEC RCPT CONN 103 CKT TOP LVR KEY 3/103 | 349935001 | 3-BLACK | IH | PLR | LT | LA | M | R | - | - | - | - | - | - | - | - | - | - | - | - | - | - | - | - | - | - | - | - | - | SALEABLE | |
| | | | | | | | | | - | - | - | - | - | - | - | - | - | - | - | - | - | - | - | - | - | - | - | - | - | | |
| | | | | | | | | | - | - | - | - | - | - | - | - | - | - | - | - | - | - | - | - | - | - | - | | | | |
| | | | | | | | | | - | - | - | - | - | - | - | - | - | - | - | - | - | - | - | - | - | - | - | - | - | | |
| | | | | | | | | | - | - | - | - | - | - | - | - | - | - | - | - | - | - | - | - | - | - | - | - | - | | |
| GPEC RCPT CONN 103 CKT END LVR KEY 4/103 | 349936001 | 4-BLACK | IH | PLR | LE | LA | M | R | - | - | - | - | - | - | - | - | - | - | - | - | - | - | - | - | - | - | - | - | - | SALEABLE | |
| | | | | | | | | | - | - | - | - | - | - | - | - | - | - | - | - | - | - | - | - | - | - | - | - | - | | |
| | | | | | | | | | - | - | - | - | - | - | - | - | - | - | - | - | - | - | - | - | - | - | - | | | | |
| | | | | | | | | | - | - | - | - | - | - | - | - | - | - | - | - | - | - | - | - | - | - | - | - | - | | |
| | | | | | | | | | - | - | - | - | - | - | - | - | - | - | - | - | - | - | - | - | - | - | - | - | - | | |
| GPEC RCPT CONN 103 CKT END LVR KEY 4/62 | 349936002 | 4-BLACK | IH | PLR | LE | LA | M | R | - | - | 3 | 4 | - | - | 7 | - | - | - | - | - | - | - | - | - | - | - | 19 | - | - | SALEABLE | |
| | | | | | | | | | - | 21 | 22 | 23 | - | - | - | - | - | - | 30 | - | 32 | - | - | 35 | - | 37 | 38 | - | - | | |
| | | | | | | | | | - | - | - | - | 43 | 44 | 45 | - | - | - | - | 50 | - | - | - | - | - | - | - | | | | |
| | | | | | | | | | - | - | 60 | - | - | - | - | - | - | - | 68 | 69 | - | - | 72 | 73 | - | 75 | - | - | - | | |
| | | | | | | | | | 77 | 78 | 79 | 80 | 81 | 82 | 83 | 84 | 85 | 86 | 87 | 88 | 89 | 90 | 91 | 92 | 93 | 94 | 95 | - | - | | |
| GPEC RCPT CONN 103 CKT TOP LVR KEY 4/103 | 349937001 | 4-BLACK | IH | PLR | LT | LA | M | R | - | - | - | - | - | - | - | - | - | - | - | - | - | - | - | - | - | - | - | - | - | SALEABLE | |
| | | | | | | | | | - | - | - | - | - | - | - | - | - | - | - | - | - | - | - | - | - | - | - | - | - | | |
| | | | | | | | | | - | - | - | - | - | - | - | - | - | - | - | - | - | - | - | - | - | - | - | | | | |
| | | | | | | | | | - | - | - | - | - | - | - | - | - | - | - | - | - | - | - | - | - | - | - | - | - | | |
| | | | | | | | | | - | - | - | - | - | - | - | - | - | - | - | - | - | - | - | - | - | - | - | - | - | | |
| GPEC RCPT CONN 103 CKT TOP LVR KEY 4/84 | 349937002 | 4-BLACK | IH | PLR | LT | LA | M | R | - | - | - | - | - | - | - | - | - | - | - | - | - | - | - | - | - | - | - | - | - | SALEABLE | |
| | | | | | | | | | - | - | - | - | - | - | - | - | - | - | - | - | - | - | - | - | - | - | - | - | - | | |
| | | | | | | | | | - | - | - | - | - | - | - | - | - | - | - | - | - | - | - | - | - | - | - | | | | |
| | | | | | | | | | - | - | - | - | - | - | - | - | - | - | - | - | - | - | - | - | - | - | - | - | - | | |
| | | | | | | | | | 77 | 78 | 79 | 80 | 81 | 82 | 83 | 84 | 85 | 86 | 87 | 88 | 89 | 90 | 91 | 92 | 93 | 94 | 95 | - | - | | |
| GPEC RCPT CONN 103 CKT TOP LVR KEY 4/56 | 349937003 | 4-BLACK | IH | PLR | LT | LA | M | R | - | - | - | - | - | 6 | 7 | 8 | 9 | 10 | 11 | 12 | 13 | - | - | - | - | - | - | 96 | - | SALEABLE | |
| | | | | | | | | | - | - | - | 23 | - | - | - | - | 28 | - | - | 31 | - | - | - | 35 | - | - | - | 98 | - | | |
| | | | | | | | | | 39 | 40 | - | - | 43 | 44 | 45 | 46 | 47 | 48 | - | - | - | - | - | - | - | - | 57 | | | | |
| | | | | | | | | | 58 | - | 60 | 61 | 62 | 63 | 64 | 65 | - | - | 68 | 69 | - | 71 | - | 73 | 74 | - | - | - | - | | |
| | | | | | | | | | 77 | 78 | - | 80 | 81 | 82 | 83 | 84 | 85 | - | 87 | 88 | - | 90 | 91 | - | - | - | - | - | - | | |
| GPEC RCPT CONN 103 CKT TOP LVR KEY 4/59 | 349937004 | 4-BLACK | IH | PLR | LT | LA | M | R | - | - | - | - | - | 6 | 7 | 8 | 9 | 10 | 11 | 12 | 13 | - | - | - | - | - | - | 96 | - | SALEABLE | |
| | | | | | | | | | - | - | - | 23 | - | - | - | - | - | - | - | 31 | - | - | - | 35 | - | - | - | - | - | | |
| | | | | | | | | | 39 | - | - | - | 43 | 44 | 45 | 46 | 47 | 48 | - | - | - | - | - | - | - | - | 57 | | | | |
| | | | | | | | | | 58 | - | 60 | 61 | 62 | 63 | 64 | 65 | - | - | 68 | 69 | - | 71 | - | 73 | 74 | - | - | - | - | | |
| | | | | | | | | | 77 | 78 | - | 80 | 81 | 82 | 83 | 84 | 85 | - | 87 | 88 | - | 90 | 91 | - | - | - | - | - | - | | |
| GPEC RCPT CONN 103 CKT TOP LVR KEY 4/54 | 349937005 | 4-BLACK | IH | PLR | LT | LA | M | R | 1 | 2 | 3 | 4 | 5 | 6 | 7 | 8 | 9 | 10 | 11 | 12 | 13 | - | - | - | - | - | - | 96 | - | SALEABLE | |
| | | | | | | | | | - | - | - | 23 | - | - | - | - | - | - | - | 31 | - | - | - | 35 | - | - | - | - | - | | |
| | | | | | | | | | 39 | - | - | - | 43 | 44 | 45 | 46 | 47 | 48 | - | - | - | - | - | - | - | - | 57 | | | | |
| | | | | | | | | | 58 | - | 60 | 61 | 62 | 63 | 64 | 65 | - | - | 68 | 69 | - | 71 | - | 73 | 74 | - | - | - | - | | |
| | | | | | | | | | 77 | 78 | - | 80 | 81 | 82 | 83 | 84 | 85 | - | 87 | 88 | - | 90 | 91 | - | - | - | - | - | - | | |
| GPEC RCPT CONN 103 CKT TOP LVR KEY 4/58 | 349937006 | 4-BLACK | IH | PLR | LT | LA | M | R | - | - | - | - | - | 6 | 7 | 8 | 9 | 10 | 11 | 12 | 13 | - | - | - | - | - | - | 96 | - | SALEABLE | |
| | | | | | | | | | - | - | - | 23 | - | - | - | - | 28 | - | - | 31 | - | - | - | 35 | - | - | - | 98 | - | | |
| | | | | | | | | | 39 | 40 | - | - | 43 | 44 | 45 | 46 | 47 | 48 | - | - | - | - | - | - | - | - | - | | | | |
| | | | | | | | | | 58 | - | 60 | 61 | 62 | 63 | 64 | 65 | - | - | 68 | 69 | - | 71 | - | - | 74 | - | - | - | - | | |
| | | | | | | | | | 77 | 78 | - | 80 | 81 | 82 | 83 | 84 | 85 | - | 87 | 88 | - | 90 | 91 | - | - | - | - | - | - | | |

molex

# GPEC IV 103 WAY RECEPTACLE SEALED ASSEMBLY MAT SEAL

## BOM AND PIN OUT SHEET

| ASSEMBLY DESCRIPTION | ASSEMBLY PART NUMBER | COMPONENT<br>THE PRESENCE OF AN ABBREVIATION INDICATES THE PRESENCE OF THAT COMPONENT. | | | | | | | BLOCKED TERMINALS<br>CAVITY WITH A NUMBER INDICATES BLOCKED TERMINAL POSITION<br>CAVITY WITHOUT A NUMBER INDICATES OPEN TERMINAL POSITION | | | | | | | | | | | | | | | | | | | | STATUS | COMMENTS |
|---|---|---|---|---|---|---|---|---|---|---|---|---|---|---|---|---|---|---|---|---|---|---|---|---|---|---|---|---|---|
| | | OUTER HOUSING KEY/COLOR | INNER HOUSING | PLR | LEVER | LEVER ARM (x/2) | MAT SEAL | RING SEAL | | | | | | | | | | | | | | | | | | | | | |
| GPEC RCPT CONN 103 CKT TOP LVR KEY 4/58 | 349937007 | 4-BLACK | IH | PLR | LT | LA | M | R | - | - | - | - | - | 6 | 7 | 8 | 9 | 10 | 11 | 12 | 13 | - | - | - | - | - | - | 96 | - | SALEABLE | |
| | | | | | | | | | - | - | - | 23 | - | - | - | - | 28 | - | - | 31 | - | - | - | 35 | - | - | - | 98 | - | | |
| | | | | | | | | | 39 | - | - | - | 43 | 44 | 45 | 46 | 47 | 48 | - | - | - | - | - | - | - | - | - | | | | |
| | | | | | | | | | 58 | 59 | 60 | 61 | 62 | 63 | 64 | 65 | - | - | 68 | 69 | - | 71 | - | - | 74 | - | - | - | - | | |
| | | | | | | | | | 77 | 78 | - | 80 | 81 | 82 | 83 | 84 | 85 | - | 87 | 88 | - | 90 | 91 | - | - | - | - | - | - | | |
| GPEC RCPT CONN 103 CKT TOP LVR KEY 4/58 | 349937008 | 4-BLACK | IH | PLR | LT | LA | M | R | - | - | - | - | - | 6 | 7 | 8 | 9 | 10 | 11 | 12 | 13 | - | - | - | - | - | - | 96 | - | SALEABLE | |
| | | | | | | | | | - | - | - | 23 | - | - | - | - | - | - | - | 31 | - | - | - | 35 | - | - | - | - | - | | |
| | | | | | | | | | 39 | - | 41 | - | 43 | 44 | 45 | 46 | 47 | 48 | - | - | - | - | - | - | - | - | 57 | | | | |
| | | | | | | | | | 58 | - | 60 | 61 | 62 | 63 | 64 | 65 | - | - | 68 | 69 | - | 71 | - | 73 | 74 | - | - | - | - | | |
| | | | | | | | | | 77 | 78 | - | 80 | 81 | 82 | 83 | 84 | 85 | - | 87 | 88 | - | 90 | 91 | - | - | - | - | - | - | | |
| GPEC RCPT CONN 103 CKT TOP LVR KEY 4/54 | 349937009 | 4-BLACK | IH | PLR | LT | LA | M | R | - | - | - | - | - | 6 | 7 | 8 | 9 | 10 | 11 | 12 | 13 | - | - | - | - | - | - | 96 | - | SALEABLE | |
| | | | | | | | | | - | - | - | 23 | - | - | - | - | 28 | - | - | 31 | - | - | - | 35 | - | - | - | 98 | - | | |
| | | | | | | | | | 39 | 40 | 41 | - | 43 | 44 | 45 | 46 | 47 | 48 | - | - | - | - | - | - | - | - | 57 | | | | |
| | | | | | | | | | 58 | 59 | 60 | 61 | 62 | 63 | 64 | 65 | - | - | 68 | 69 | - | 71 | - | 73 | 74 | - | - | - | - | | |
| | | | | | | | | | 77 | 78 | - | 80 | 81 | 82 | 83 | 84 | 85 | - | 87 | 88 | - | 90 | 91 | - | - | - | - | - | - | | |
| GPEC RCPT CONN 103 CKT TOP LVR KEY 4/55 | 349937010 | 4-BLACK | IH | PLR | LT | LA | M | R | - | - | - | - | - | 6 | 7 | 8 | 9 | 10 | 11 | 12 | 13 | - | - | - | - | - | - | 96 | - | SALEABLE | |
| | | | | | | | | | - | - | - | 23 | - | - | - | - | 28 | - | - | 31 | - | - | - | 35 | - | - | - | 98 | - | | |
| | | | | | | | | | 39 | 40 | 41 | - | 43 | 44 | 45 | 46 | 47 | 48 | - | - | - | - | - | - | - | - | 57 | | | | |
| | | | | | | | | | 58 | - | 60 | 61 | 62 | 63 | 64 | 65 | - | - | 68 | 69 | - | 71 | - | 73 | 74 | - | - | - | - | | |
| | | | | | | | | | 77 | 78 | - | 80 | 81 | 82 | 83 | 84 | 85 | - | 87 | 88 | - | 90 | 91 | - | - | - | - | - | - | | |
| GPEC RCPT CONN 103 CKT TOP LVR KEY 4/39 | 349937011 | 4-BLACK | IH | PLR | LT | LA | M | R | 1 | 2 | 3 | - | 5 | - | - | - | 9 | - | - | 12 | 13 | 14 | 15 | 16 | - | 18 | 19 | - | - | SALEABLE | |
| | | | | | | | | | 20 | 21 | 22 | 23 | 24 | - | - | 27 | - | 29 | 30 | 31 | 32 | - | 34 | 35 | - | 37 | 38 | - | - | | |
| | | | | | | | | | - | - | - | - | 43 | 44 | 45 | - | - | - | - | 50 | 51 | - | 53 | 54 | 55 | 56 | 57 | | | | |
| | | | | | | | | | - | 59 | - | - | - | - | - | - | - | - | 68 | 69 | 70 | 71 | 72 | 73 | 74 | 75 | - | - | - | | |
| | | | | | | | | | 77 | 78 | 79 | 80 | 81 | 82 | 83 | 84 | 85 | 86 | 87 | 88 | 89 | 90 | 91 | 92 | 93 | 94 | 95 | - | - | | |
| GPEC RCPT CONN 103 CKT TOP LVR KEY 4/28 | 349937012 | 4-BLACK | IH | PLR | LT | LA | M | R | 1 | 2 | 3 | 4 | 5 | 6 | - | 8 | 9 | - | 11 | 12 | 13 | 14 | 15 | 16 | - | 18 | 19 | - | - | SALEABLE | |
| | | | | | | | | | 20 | 21 | 22 | 23 | 24 | 25 | 26 | 27 | - | 29 | 30 | 31 | 32 | - | 34 | 35 | - | 37 | 38 | - | - | | |
| | | | | | | | | | 39 | - | - | 42 | 43 | 44 | 45 | - | - | 48 | 49 | 50 | 51 | - | 53 | 54 | 55 | 56 | 57 | | | | |
| | | | | | | | | | 58 | 59 | - | - | - | - | - | - | - | - | 68 | 69 | 70 | 71 | 72 | 73 | 74 | 75 | - | - | - | | |
| | | | | | | | | | 77 | 78 | 79 | 80 | 81 | 82 | 83 | 84 | 85 | 86 | 87 | 88 | 89 | 90 | 91 | 92 | 93 | 94 | 95 | - | - | | |
| GPEC RCPT CONN 103 CKT TOP LVR KEY 4/58 | 349937013 | 4-BLACK | IH | PLR | LT | LA | M | R | - | 2 | 3 | 4 | - | - | 7 | - | - | - | - | 12 | - | - | - | - | - | 18 | 19 | - | - | SALEABLE | |
| | | | | | | | | | - | - | 22 | 23 | - | - | - | - | - | - | 30 | - | 32 | - | 34 | 35 | - | 37 | 38 | - | - | | |
| | | | | | | | | | - | - | - | - | 43 | 44 | 45 | - | - | - | - | 50 | - | - | - | 54 | - | 56 | - | | | | |
| | | | | | | | | | - | - | 60 | - | - | - | - | - | - | - | - | - | - | - | 72 | 73 | 74 | 75 | - | - | - | | |
| | | | | | | | | | 77 | 78 | 79 | 80 | 81 | 82 | 83 | 84 | 85 | 86 | 87 | 88 | 89 | 90 | 91 | 92 | 93 | 94 | 95 | - | - | | |
| GPEC RCPT CONN 103 CKT TOP LVR KEY 4/60 | 349937014 | 4-BLACK | IH | PLR | LT | LA | M | R | - | 2 | 3 | 4 | - | - | - | - | - | - | - | - | - | - | - | - | - | - | 19 | - | - | SALEABLE | |
| | | | | | | | | | - | - | 22 | 23 | - | - | - | - | - | - | 30 | - | 32 | - | - | 35 | - | 37 | 38 | - | - | | |
| | | | | | | | | | - | - | - | - | 43 | 44 | 45 | - | - | - | - | 50 | - | - | 53 | 54 | - | - | - | | | | |
| | | | | | | | | | - | - | 60 | - | - | - | - | - | - | - | 68 | 69 | - | - | 72 | 73 | 74 | 75 | - | - | - | | |
| | | | | | | | | | 77 | 78 | 79 | 80 | 81 | 82 | 83 | 84 | 85 | 86 | 87 | 88 | 89 | 90 | 91 | 92 | 93 | 94 | 95 | - | - | | |
| GPEC RCPT CONN 103 CKT END LVR KEY 5/103 | 349938001 | 5-BLACK | IH | PLR | LE | LA | M | R | - | - | - | - | - | - | - | - | - | - | - | - | - | - | - | - | - | - | - | - | - | SALEABLE | |
| | | | | | | | | | - | - | - | - | - | - | - | - | - | - | - | - | - | - | - | - | - | - | - | - | - | | |
| | | | | | | | | | - | - | - | - | - | - | - | - | - | - | - | - | - | - | - | - | - | - | - | | | | |
| | | | | | | | | | - | - | - | - | - | - | - | - | - | - | - | - | - | - | - | - | - | - | - | - | - | | |
| | | | | | | | | | - | - | - | - | - | - | - | - | - | - | - | - | - | - | - | - | - | - | - | - | - | | |
| GPEC RCPT CONN 103 CKT END LVR KEY 5/103 | 349938002 | 5-BLACK | IH | PLR | LE | LA | M | R | - | - | - | - | - | - | - | - | - | - | - | - | - | - | - | - | - | - | - | - | - | SALEABLE | |
| | | | | | | | | | - | - | - | - | - | - | - | - | - | - | - | - | - | - | - | - | - | - | - | - | - | | |
| | | | | | | | | | - | - | - | - | - | - | - | - | - | - | - | - | - | - | - | - | - | - | - | - | - | | |
| | | | | | | | | | - | - | - | - | - | - | - | - | - | - | - | - | - | - | - | - | - | - | - | - | - | | |

molex

# GPEC IV 103 WAY RECEPTACLE SEALED ASSEMBLY MAT SEAL

## BOM AND PIN OUT SHEET

| ASSEMBLY DESCRIPTION | ASSEMBLY PART NUMBER | COMPONENT<br>THE PRESENCE OF AN ABBREVIATION INDICATES THE PRESENCE OF THAT COMPONENT. | | | | | | | BLOCKED TERMINALS<br>CAVITY WITH A NUMBER INDICATES BLOCKED TERMINAL POSITION<br>CAVITY WITHOUT A NUMBER INDICATES OPEN TERMINAL POSITION | | | | | | | | | | | | | | | | | | | | | | STATUS | COMMENTS |
|---|---|---|---|---|---|---|---|---|---|---|---|---|---|---|---|---|---|---|---|---|---|---|---|---|---|---|---|---|---|---|---|
| | | OUTER HOUSING KEY/COLOR | INNER HOUSING | PLR | LEVER | LEVER ARM (x/2) | MAT SEAL | RING SEAL | | | | | | | | | | | | | | | | | | | | | | | |
| GPEC RCPT CONN 103 CKT TOP LVR KEY 5/42 | 349938010 | 5-BLACK | IH | PLR | LT | LA | M | R | 1 | 2 | 3 | 4 | 5 | 6 | - | 8 | 9 | - | 11 | 12 | - | - | 15 | 16 | - | - | - | | 96 | - | SALEABLE | |
| | | | | | | | | | 20 | 21 | - | - | - | 25 | 26 | 27 | - | - | 30 | 31 | - | - | 34 | - | - | 37 | - | | 98 | - | | |
| | | | | | | | | | 39 | - | - | 42 | 43 | 44 | 45 | - | - | 48 | 49 | - | - | - | - | 54 | 55 | - | 57 | | | | | |
| | | | | | | | | | 58 | - | 60 | 61 | 62 | 63 | 64 | - | - | 67 | 68 | 69 | - | 71 | 72 | - | 74 | 75 | 76 | | - | - | | |
| | | | | | | | | | 77 | - | - | 80 | 81 | 82 | 83 | 84 | 85 | 86 | - | 88 | 89 | - | - | 92 | 93 | 94 | 95 | | - | - | | |
| GPEC RCPT CONN 103 CKT TOP LVR KEY 5/42 | 349938010 | 5-BLACK | IH | PLR | LT | LA | M | R | 1 | 2 | 3 | 4 | 5 | 6 | - | 8 | 9 | - | 11 | 12 | - | - | 15 | 16 | - | - | - | | 96 | - | SALEABLE | |
| | | | | | | | | | 20 | 21 | - | - | - | 25 | 26 | 27 | - | - | 30 | 31 | - | - | 34 | - | - | 37 | - | | 98 | - | | |
| | | | | | | | | | 39 | - | - | 42 | 43 | 44 | 45 | - | - | 48 | 49 | - | - | - | - | 54 | 55 | - | 57 | | | | | |
| | | | | | | | | | 58 | - | 60 | 61 | 62 | 63 | 64 | - | - | 67 | 68 | 69 | - | 71 | 72 | - | 74 | 75 | 76 | | - | - | | |
| | | | | | | | | | 77 | - | - | 80 | 81 | 82 | 83 | 84 | 85 | 86 | - | 88 | 89 | - | - | 92 | 93 | 94 | 95 | | - | - | | |
| GPEC RCPT CONN 103 CKT END LVR KEY 5/56 | 349938011 | 5-BLACK | IH | PLR | LE | LA | M | R | 1 | 2 | 3 | - | - | - | - | - | - | - | - | - | - | 14 | 15 | 16 | 17 | 18 | 19 | | - | 97 | SALEABLE | |
| | | | | | | | | | - | - | 22 | 23 | 24 | 25 | - | 27 | - | 29 | - | - | 32 | 33 | 34 | - | 36 | 37 | 38 | | - | 99 | | |
| | | | | | | | | | - | - | - | 42 | - | - | - | - | - | - | 49 | 50 | 51 | 52 | 53 | 54 | - | - | - | | | | | |
| | | | | | | | | | - | 59 | - | - | - | - | - | - | - | 67 | - | 69 | 70 | - | - | - | - | - | 76 | | - | 101 | | |
| | | | | | | | | | - | - | - | 80 | 81 | 82 | 83 | 84 | 85 | - | - | - | 89 | 90 | - | 92 | - | 94 | - | | - | 103 | | |
| GPEC RCPT CONN 103 CKT END LVR KEY 5/47 | 349938012 | 5-BLACK | IH | PLR | LE | LA | M | R | - | - | - | 4 | 5 | 6 | 7 | 8 | 9 | 10 | 11 | 12 | 13 | - | - | - | - | - | - | | 96 | - | SALEABLE | |
| | | | | | | | | | 20 | 21 | - | - | - | - | 26 | - | 28 | - | 30 | 31 | - | - | - | 35 | - | - | - | | 98 | - | | |
| | | | | | | | | | 39 | 40 | 41 | - | 43 | 44 | 45 | 46 | 47 | 48 | - | - | - | - | - | - | 55 | 56 | 57 | | | | | |
| | | | | | | | | | 58 | - | 60 | 61 | 62 | 63 | 64 | 65 | 66 | - | 68 | - | - | 71 | 72 | 73 | 74 | 75 | - | | 100 | - | | |
| | | | | | | | | | 77 | 78 | 79 | - | - | - | - | - | - | 86 | 87 | 88 | - | - | 91 | - | 93 | - | 95 | | 102 | - | | |
| GPEC RCPT CONN 103 CKT END LVR KEY 5/59 | 349938013 | 5-BLACK | IH | PLR | LE | LA | M | R | 1 | - | - | - | 5 | - | - | - | - | - | - | - | - | - | - | 16 | - | - | 19 | | - | - | SALEABLE | |
| | | | | | | | | | 20 | - | 22 | 23 | 24 | - | - | - | - | - | 30 | - | 32 | - | - | 35 | - | 37 | 38 | | - | - | | |
| | | | | | | | | | - | - | - | - | 43 | 44 | 45 | - | - | - | - | - | - | 52 | 53 | - | 55 | 56 | 57 | | | | | |
| | | | | | | | | | 58 | - | - | - | - | - | - | - | - | - | - | - | - | - | - | 73 | 74 | 75 | - | | - | - | | |
| | | | | | | | | | 77 | 78 | 79 | 80 | 81 | 82 | 83 | 84 | 85 | 86 | 87 | 88 | 89 | 90 | 91 | 92 | 93 | 94 | 95 | | - | - | | |
| GPEC RCPT CONN 103 CKT TOP LVR KEY 5/103 | 349939001 | 5-BLACK | IH | PLR | LT | LA | M | R | - | - | - | - | - | - | - | - | - | - | - | - | - | - | - | - | - | - | - | | - | - | SALEABLE | |
| | | | | | | | | | - | - | - | - | - | - | - | - | - | - | - | - | - | - | - | - | - | - | - | | - | - | | |
| | | | | | | | | | - | - | - | - | - | - | - | - | - | - | - | - | - | - | - | - | - | - | - | | | | | |
| | | | | | | | | | - | - | - | - | - | - | - | - | - | - | - | - | - | - | - | - | - | - | - | | - | - | | |
| | | | | | | | | | - | - | - | - | - | - | - | - | - | - | - | - | - | - | - | - | - | - | - | | - | - | | |
| GPEC RCPT CONN 103 CKT TOP LVR KEY 5/57 | 349939002 | 5-BLACK | IH | PLR | LT | LA | M | R | - | - | - | 4 | 5 | 6 | 7 | 8 | 9 | 10 | 11 | - | 13 | - | - | - | - | - | - | | 96 | - | SALEABLE | |
| | | | | | | | | | - | - | - | - | - | - | 26 | - | 28 | - | 30 | 31 | - | - | - | 35 | - | - | - | | 98 | - | | |
| | | | | | | | | | 39 | 40 | - | - | 43 | 44 | 45 | 46 | 47 | 48 | - | - | - | - | - | - | - | - | 57 | | | | | |
| | | | | | | | | | 58 | - | 60 | 61 | 62 | 63 | 64 | 65 | 66 | - | 68 | 69 | - | 71 | 72 | 73 | 74 | 75 | - | | 100 | - | | |
| | | | | | | | | | 77 | 78 | - | - | - | - | - | - | - | - | - | - | - | 90 | 91 | - | - | - | - | | 102 | - | | |
| GPEC RCPT CONN 103 CKT TOP LVR KEY 5/55 | 349939003 | 5-BLACK | IH | PLR | LT | LA | M | R | - | - | - | 4 | 5 | 6 | 7 | 8 | 9 | 10 | 11 | 12 | 13 | - | - | - | - | - | - | | 96 | - | SALEABLE | |
| | | | | | | | | | - | 21 | - | - | - | - | 26 | - | 28 | - | 30 | 31 | - | - | - | 35 | - | - | - | | 98 | - | | |
| | | | | | | | | | 39 | 40 | - | - | 43 | 44 | 45 | 46 | 47 | 48 | - | - | - | - | - | - | - | - | 57 | | | | | |
| | | | | | | | | | 58 | - | 60 | 61 | 62 | 63 | 64 | 65 | 66 | - | 68 | 69 | - | 71 | 72 | 73 | 74 | - | 76 | | 100 | - | | |
| | | | | | | | | | 77 | 78 | - | - | - | - | - | - | - | - | - | - | - | 90 | 91 | - | - | - | - | | 102 | - | | |
| GPEC RCPT CONN 103 CKT TOP LVR KEY 5/47 | 349939004 | 5-BLACK | IH | PLR | LT | LA | M | R | - | - | - | 4 | 5 | 6 | 7 | 8 | 9 | 10 | 11 | 12 | 13 | - | - | - | - | - | - | | 96 | - | SALEABLE | |
| | | | | | | | | | 20 | 21 | - | - | - | - | 26 | - | 28 | - | 30 | 31 | - | - | - | 35 | - | - | - | | 98 | - | | |
| | | | | | | | | | 39 | 40 | - | - | 43 | 44 | 45 | 46 | 47 | 48 | - | - | - | - | - | - | 55 | 56 | 57 | | | | | |
| | | | | | | | | | 58 | 59 | 60 | 61 | 62 | 63 | 64 | 65 | 66 | - | 68 | - | - | 71 | 72 | 73 | 74 | 75 | - | | 100 | - | | |
| | | | | | | | | | 77 | 78 | 79 | - | - | - | - | - | - | 86 | 87 | 88 | - | - | 91 | - | 93 | - | 95 | | 102 | - | | |
| GPEC RCPT CONN 103 CKT TOP LVR KEY 5/48 | 349939005 | 5-BLACK | IH | PLR | LT | LA | M | R | - | - | - | 4 | 5 | 6 | 7 | 8 | 9 | 10 | 11 | 12 | 13 | - | - | - | - | - | - | | 96 | - | SALEABLE | |
| | | | | | | | | | 20 | 21 | - | - | - | - | 26 | - | 28 | - | 30 | 31 | - | - | - | 35 | - | - | - | | 98 | - | | |
| | | | | | | | | | 39 | 40 | - | - | 43 | 44 | 45 | 46 | 47 | 48 | - | - | - | - | - | - | 55 | 56 | 57 | | | | | |
| | | | | | | | | | 58 | - | 60 | 61 | 62 | 63 | 64 | 65 | 66 | - | 68 | - | - | 71 | 72 | 73 | 74 | 75 | - | | 100 | - | | |
| | | | | | | | | | 77 | 78 | 79 | - | - | - | - | - | - | 86 | 87 | 88 | - | - | 91 | - | 93 | - | 95 | | 102 | - | | |

molex

# GPEC IV 103 WAY RECEPTACLE SEALED ASSEMBLY MAT SEAL

## BOM AND PIN OUT SHEET

| ASSEMBLY DESCRIPTION | ASSEMBLY PART NUMBER | COMPONENT<br>THE PRESENCE OF AN ABBREVIATION INDICATES THE PRESENCE OF THAT COMPONENT. | | | | | | | BLOCKED TERMINALS<br>CAVITY WITH A NUMBER INDICATES BLOCKED TERMINAL POSITION<br>CAVITY WITHOUT A NUMBER INDICATES OPEN TERMINAL POSITION | | | | | | | | | | | | | | | | | | | | | | STATUS | COMMENTS |
|---|---|---|---|---|---|---|---|---|---|---|---|---|---|---|---|---|---|---|---|---|---|---|---|---|---|---|---|---|---|---|---|
| | | OUTER HOUSING KEY/COLOR | INNER HOUSING | PLR | LEVER | LEVER ARM (x/2) | MAT SEAL | RING SEAL | | | | | | | | | | | | | | | | | | | | | | | |
| GPEC RCPT CONN 103 CKT TOP LVR KEY 5/55 | 349939006 | 5-BLACK | IH | PLR | LT | LA | M | R | - | - | - | 4 | 5 | 6 | 7 | 8 | 9 | 10 | 11 | 12 | 13 | - | - | - | - | - | - | 96 | - | SALEABLE | |
| | | | | | | | | | - | 21 | - | - | - | - | 26 | - | 28 | - | 30 | 31 | - | - | - | 35 | - | - | - | 98 | - | | |
| | | | | | | | | | 39 | 40 | - | - | 43 | 44 | 45 | 46 | 47 | 48 | - | - | - | - | - | - | - | - | 57 | | | | |
| | | | | | | | | | 58 | - | 60 | 61 | 62 | 63 | 64 | 65 | 66 | - | 68 | 69 | - | 71 | 72 | 73 | 74 | 75 | - | 100 | - | | |
| | | | | | | | | | 77 | 78 | - | - | - | - | - | - | - | - | - | - | - | 90 | 91 | - | - | - | - | 102 | - | | |
| GPEC RCPT CONN 103 CKT TOP LVR KEY 5/56 | 349939007 | 5-BLACK | IH | PLR | LT | LA | M | R | - | - | - | 4 | 5 | 6 | 7 | 8 | 9 | 10 | 11 | 12 | 13 | - | - | - | - | - | - | 96 | - | SALEABLE | |
| | | | | | | | | | - | 21 | - | - | - | - | 26 | - | 28 | - | 30 | 31 | - | - | - | 35 | - | - | - | 98 | - | | |
| | | | | | | | | | 39 | 40 | - | - | 43 | 44 | 45 | 46 | 47 | 48 | - | - | - | - | - | - | - | - | 57 | | | | |
| | | | | | | | | | 58 | - | 60 | 61 | 62 | 63 | 64 | 65 | - | - | 68 | 69 | - | 71 | 72 | 73 | 74 | 75 | - | 100 | - | | |
| | | | | | | | | | 77 | 78 | - | - | - | - | - | - | - | - | - | - | - | 90 | 91 | - | - | - | - | 102 | - | | |
| GPEC RCPT CONN 103 CKT TOP LVR KEY 5/49 | 349939008 | 5-BLACK | IH | PLR | LT | LA | M | R | - | - | - | 4 | 5 | 6 | 7 | 8 | 9 | 10 | 11 | 12 | 13 | - | - | - | - | - | - | 96 | - | SALEABLE | |
| | | | | | | | | | 20 | 21 | - | - | - | - | 26 | - | 28 | - | 30 | 31 | - | - | - | 35 | - | - | - | 98 | - | | |
| | | | | | | | | | 39 | 40 | - | - | 43 | 44 | 45 | 46 | 47 | 48 | - | - | - | - | - | - | 55 | 56 | 57 | | | | |
| | | | | | | | | | 58 | - | 60 | 61 | 62 | 63 | 64 | 65 | - | - | 68 | - | - | 71 | 72 | 73 | 74 | 75 | - | 100 | - | | |
| | | | | | | | | | 77 | 78 | 79 | - | - | - | - | - | - | 86 | 87 | 88 | - | - | 91 | - | 93 | - | 95 | 102 | - | | |
| GPEC RCPT CONN 103 CKT TOP LVR KEY 5/58 | 349939009 | 5-BLACK | IH | PLR | LT | LA | M | R | - | - | - | 4 | 5 | 6 | 7 | 8 | 9 | 10 | 11 | - | 13 | - | - | - | - | - | - | 96 | - | SALEABLE | |
| | | | | | | | | | - | - | - | - | - | - | 26 | - | 28 | - | 30 | 31 | - | - | - | 35 | - | - | - | 98 | - | | |
| | | | | | | | | | 39 | 40 | - | - | 43 | 44 | 45 | 46 | 47 | 48 | - | - | - | - | - | - | - | - | 57 | | | | |
| | | | | | | | | | 58 | - | 60 | 61 | 62 | 63 | 64 | 65 | - | - | 68 | 69 | - | 71 | 72 | 73 | 74 | 75 | - | 100 | - | | |
| | | | | | | | | | 77 | 78 | - | - | - | - | - | - | - | - | - | - | - | 90 | 91 | - | - | - | - | 102 | - | | |
| GPEC RCPT CONN 103 CKT TOP LVR KEY 5/103 | 349939010 | 5-BLACK | IH | PLR | LT | LA | M | R | - | - | - | - | - | - | - | - | - | - | - | - | - | - | - | - | - | - | - | - | - | SALEABLE | |
| | | | | | | | | | - | - | - | - | - | - | - | - | - | - | - | - | - | - | - | - | - | - | - | - | - | | |
| | | | | | | | | | - | - | - | - | - | - | - | - | - | - | - | - | - | - | - | - | - | - | - | | | | |
| | | | | | | | | | - | - | - | - | - | - | - | - | - | - | - | - | - | - | - | - | - | - | - | - | - | | |
| | | | | | | | | | - | - | - | - | - | - | - | - | - | - | - | - | - | - | - | - | - | - | - | - | - | | |
| GPEC RCPT CONN 103 CKT TOP LVR KEY 5/49 | 349939011 | 5-BLACK | IH | PLR | LT | LA | M | R | - | - | - | 4 | 5 | 6 | 7 | 8 | 9 | 10 | 11 | 12 | 13 | - | - | - | - | - | - | 96 | - | SALEABLE | |
| | | | | | | | | | - | 21 | - | 23 | - | - | 26 | - | 28 | - | - | 31 | - | - | - | 35 | - | - | - | 98 | - | | |
| | | | | | | | | | 39 | 40 | - | - | 43 | 44 | 45 | 46 | 47 | 48 | - | - | - | - | - | - | - | - | 57 | | | | |
| | | | | | | | | | 58 | 59 | 60 | 61 | 62 | 63 | 64 | 65 | - | - | 68 | 69 | - | 71 | - | 73 | 74 | - | - | 100 | - | | |
| | | | | | | | | | 77 | 78 | - | 80 | 81 | 82 | 83 | 84 | 85 | - | 87 | 88 | - | 90 | 91 | - | - | - | - | 102 | - | | |